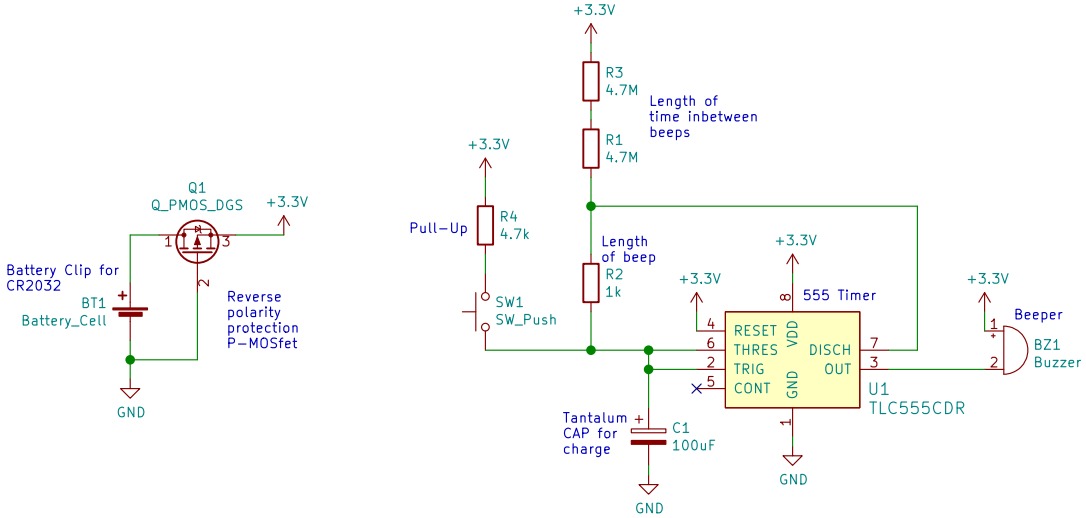

Reverse Polarity Circuit:
https://tinyurl.com/yerjw5yw

Link to simulation of circuit:
http://tinyurl.com/ydv6zsot

http://tinyurl.com/ydv6zsot

Sheet: /
File: BeeperV2.sch

Title:

Size: A	Date:	Rev:
KiCad E.D.A. kicad (5.1.5)-3		Id: 1/1