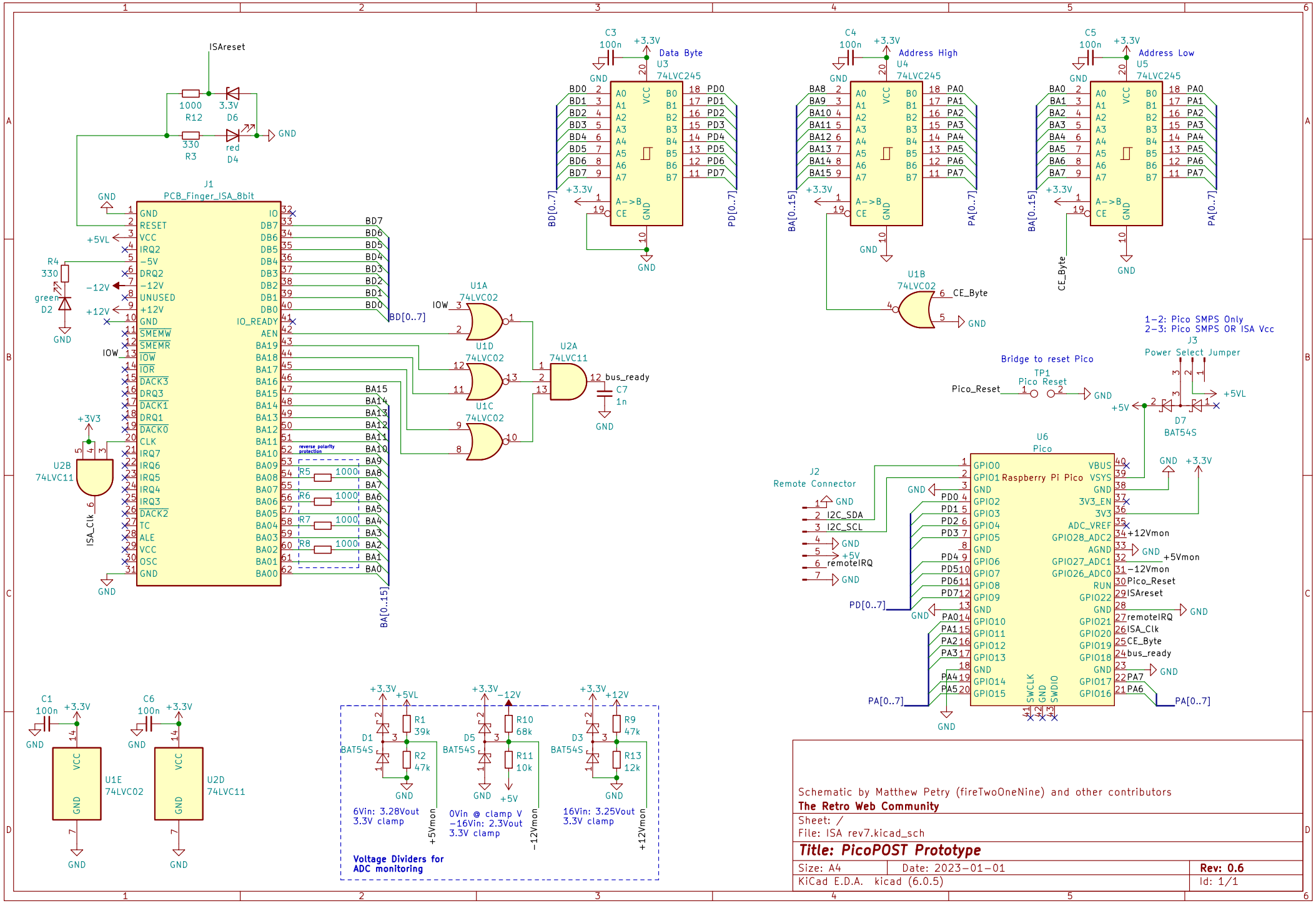
ISAreset
1000 R12
3.3V D6
330 R3
red D4
GND
J1
PCB_Finger_ISA_8bit
R4 330
green D2
+5VL
−12V
+12V
IOW
+3V3
U2B 74LVC11
ISA_Clk
BD[0..7]
BA[0..15]
reverse polarity protection
R5 1000
R6 1000
R7 1000
R8 1000
U1A 74LVC02
U1D 74LVC02
U1C 74LVC02
U2A 74LVC11
bus_ready
C7 1n
C3 100n
Data Byte
U3 74LVC245
PD[0..7]
C4 100n
Address High
U4 74LVC245
PA[0..7]
U1B 74LVC02
CE_Byte
C5 100n
Address Low
U5 74LVC245
1–2: Pico SMPS Only
2–3: Pico SMPS OR ISA Vcc
J3
Power Select Jumper
Bridge to reset Pico
TP1
Pico Reset
Pico_Reset
D7 BAT54S
U6
Pico
Raspberry Pi Pico
J2
Remote Connector
I2C_SDA
I2C_SCL
remoteIRQ
+12Vmon
+5Vmon
−12Vmon
ISAreset
ISA_Clk
bus_ready
C1 100n
U1E 74LVC02
C6 100n
U2D 74LVC11
R1 39k
R2 47k
D1 BAT54S
6Vin: 3.28Vout
3.3V clamp
R10 68k
R11 10k
D5 BAT54S
0Vin @ clamp V
−16Vin: 2.3Vout
3.3V clamp
R9 47k
R13 12k
D3 BAT54S
16Vin: 3.25Vout
3.3V clamp
Voltage Dividers for
ADC monitoring
Schematic by Matthew Petry (fireTwoOneNine) and other contributors
The Retro Web Community
Sheet: /
File: ISA rev7.kicad_sch
Title: PicoPOST Prototype
Size: A4
Date: 2023-01-01
Rev: 0.6
KiCad E.D.A. kicad (6.0.5)
Id: 1/1