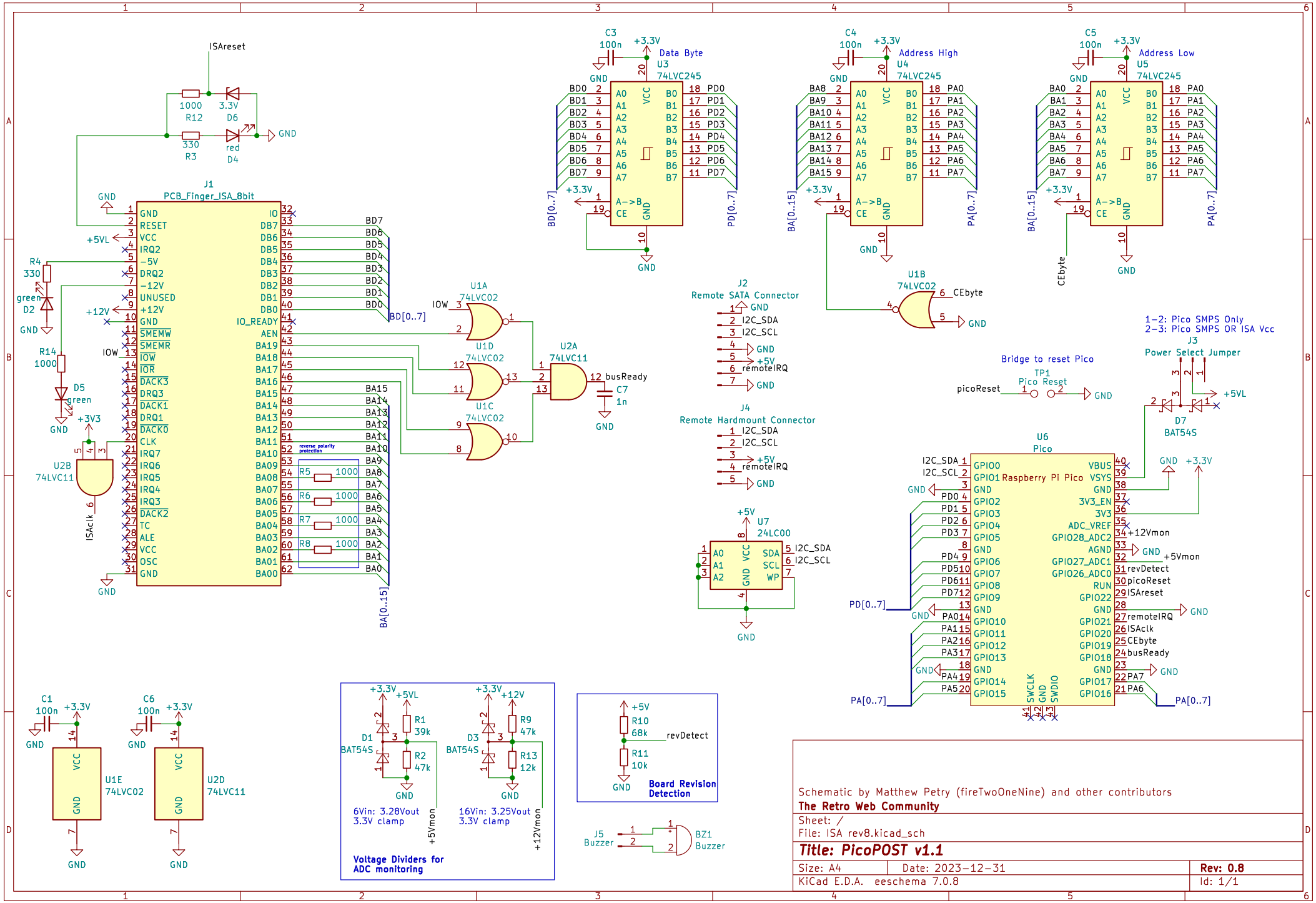

Schematic by Matthew Petry (fireTwoOneNine) and other contributors

The Retro Web Community

Sheet: /

File: ISA rev8.kicad_sch

Title: PicoPOST v1.1

Size: A4	Date: 2023-12-31	Rev: 0.8
KiCad E.D.A. eeschema 7.0.8		Id: 1/1