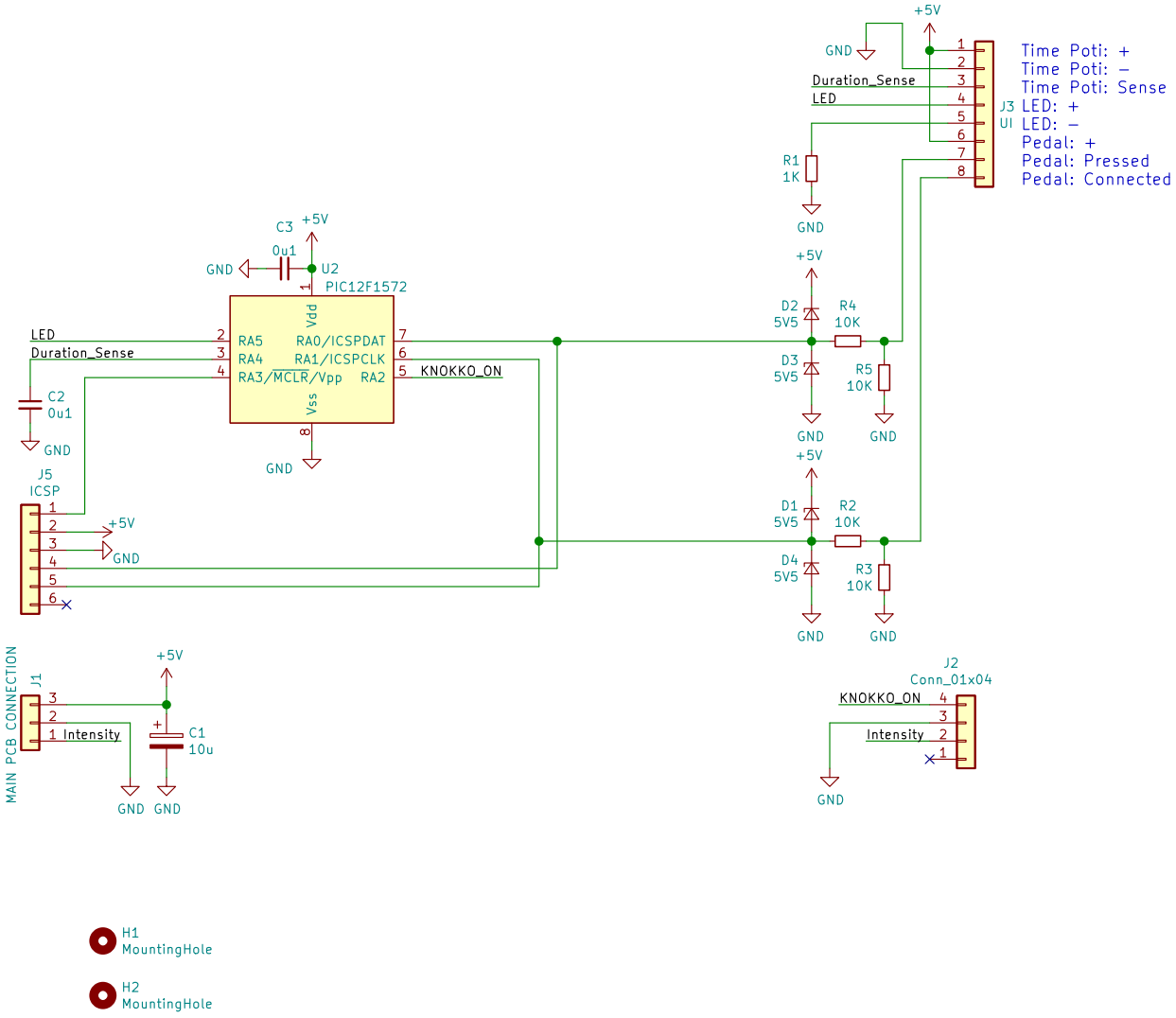

Philipp Schilk

Sheet: /

File: KnokooPedalCtrl.sch

Title: Knokoo Pedal Mod

Size: A4	Date: 2020-10-17	**Rev: v0.1**
KiCad E.D.A. kicad (5.1.5)-3		Id: 1/1