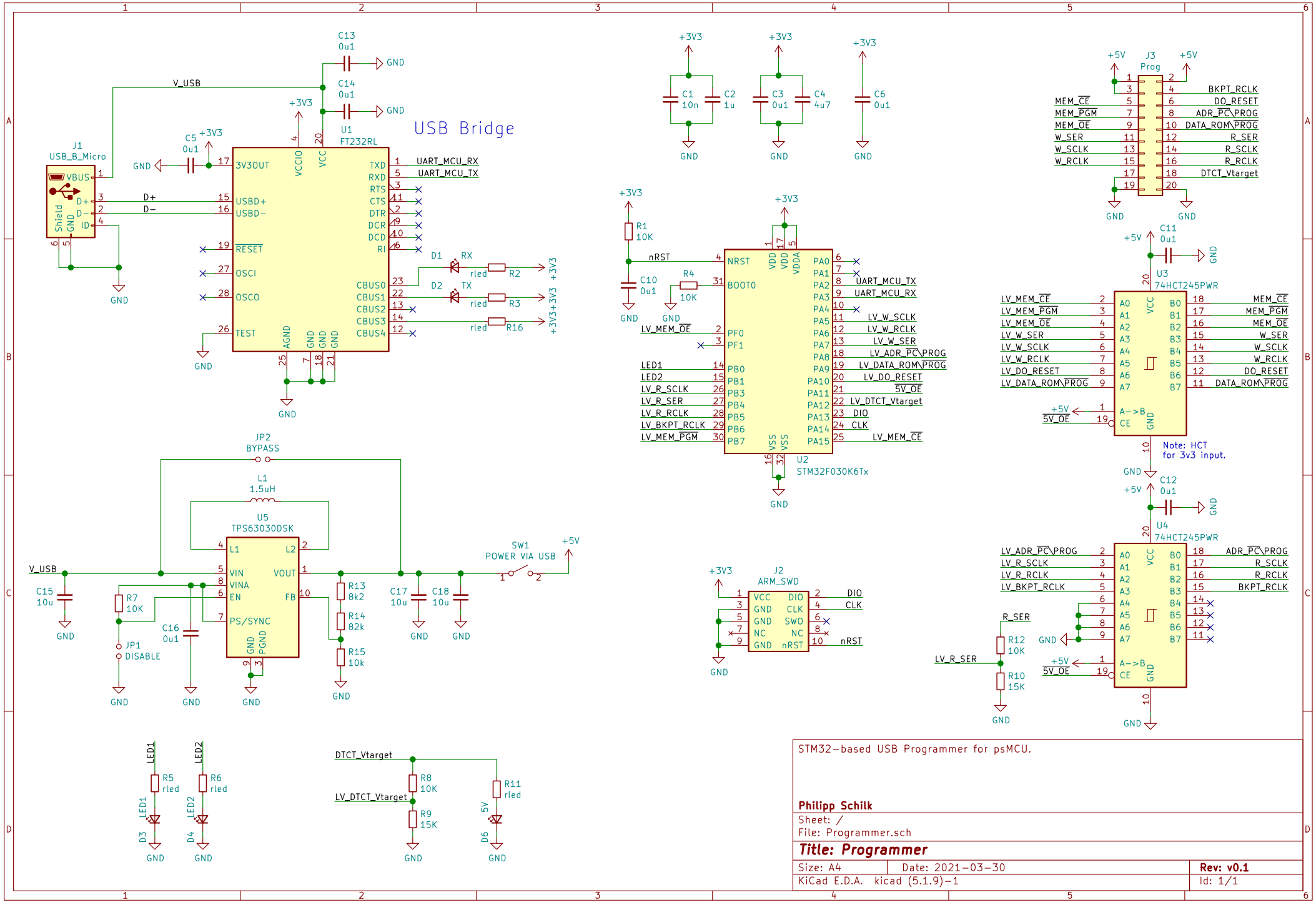

STM32-based USB Programmer for psMCU.

Philipp Schilk

Sheet: /

File: Programmer.sch

Title: Programmer

Size: A4	Date: 2021-03-30	**Rev: v0.1**
KiCad E.D.A. kicad (5.1.9)-1		Id: 1/1