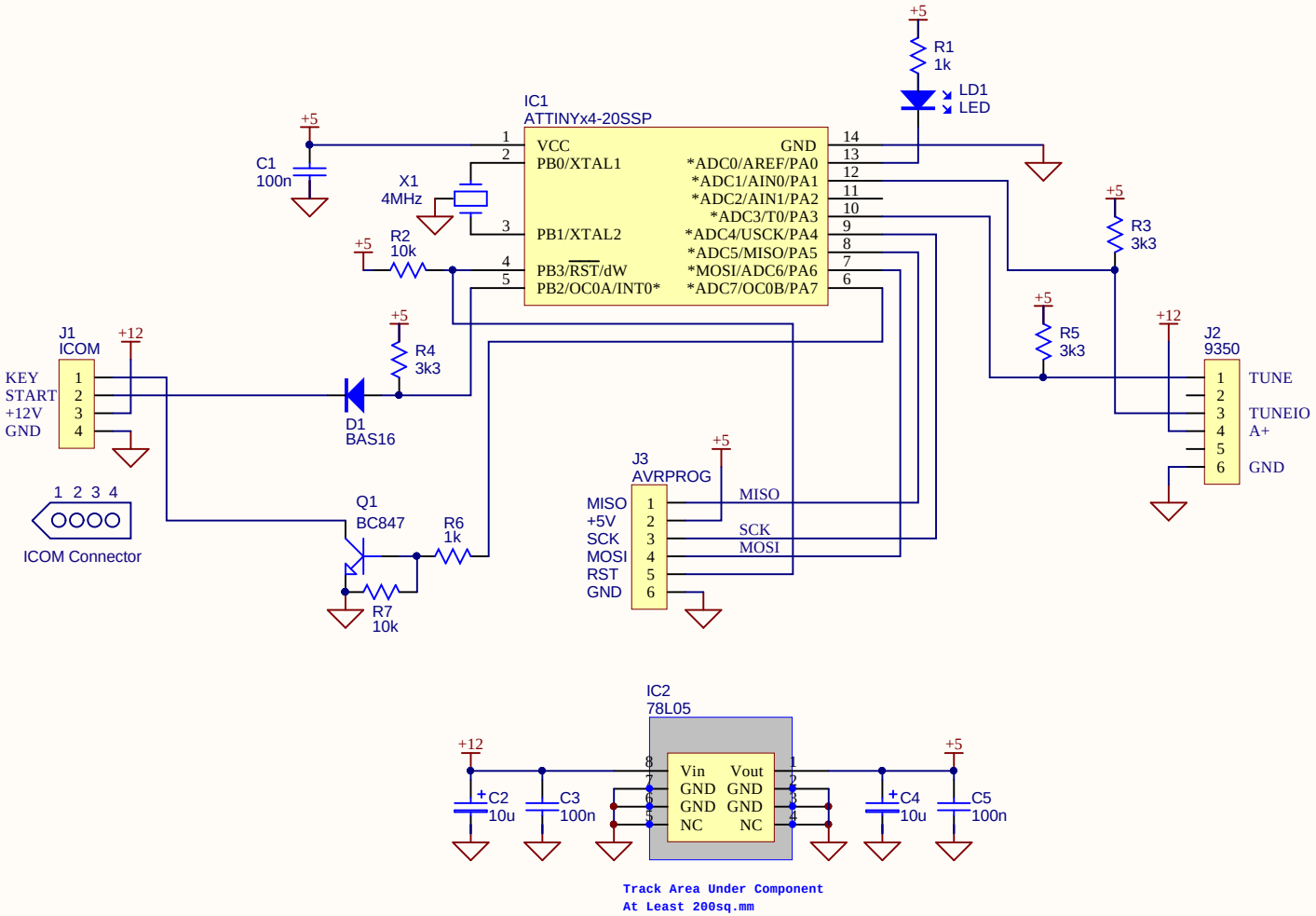

Track Area Under Component
At Least 200sq.mm

Title	Basic Icom to Codan 9350 Interface	
Size A4	Number IC-9350	Revision A
Date: 8/01/2018		Sheet 1 of 1
File: R:\Personal\..\706mk2-basic.SchDoc		Drawn By: VK5ZM