Scalable Tactile Sleeves

David Hill

April 20 2023

1 Introduction

The work discussed in this paper is a continuation of the research done by Nathan Day in his thesis work [1]. Tactile sensor grids are flat sensors that can measure the force and location of the force applied on the sensor. These sensors are very useful for a variety of applications, but they interest the RADLab due to their usefullness on soft robots to aid them in interaction with the environment. Although these sensors have been made before [1], there remain several concerns in making large grids of force sensors:

1. Cost of each individual sensor.
2. Precision of the sensors.
3. Interference of sensors with gripping surfaces and methods.
4. Speed at which the sensor data can be reported.
5. Time and difficulty to interpret the data intelligently for control.

Nathan attempted to address most of these concerns in his research and had varied success [1]. He based his research on work done previously by Dr. Killpack and others in the field using inexpensive fabric that changes resistance when it is compressed. The use of this fabric produces a relatively inexpensive sensor that can be placed on top of or beneath a gripping surface, addressing concerns 1 and 3 naturally. Some of the concerns with the previous design were the precision of the sensors and the speed at which the sensor data could be reported. Nathan characterized the precision and accuracy of the fabric sensors experimentally. He observed that if the correct steps were taken to calibrate each sensor, the sensors would have an average percent error of less than 10 percent. He found that much of this error comes from hysteresis in the fabric. He was able to get impressive speeds of up to 80Hz for 300 sensors. While this is great, his method cannot be scaled easily. If more sensors are wanted, the system would require a lot more hardware and separate micro-controllers for portions of the grid, all reporting to a computer through USB. The work done in this paper is dedicated to tackling the problem of scalability with the goal of pulling from up to 10,000 sensors at the same rate.

2 Fabric Sensors

The fabric sensors are made using three types of fabric, metal snaps, and ribbon cable. The fabric is made from 5 layers, the first and last layers are made from spandex which has no electrically conductive properties and is used to insulate the sensor. The interior layers are as follows: (1) vertical strips of conductive fabric, (2) variable-resistant fabric, (3) horizontal strips of conductive fabric. The sensor is shown folded open in Figure 1. The black is the exterior spandex layers, the light grey is the conductive strips, and the dark grey is the variable-resistant fabric. Metal snaps and solder are used to connect the ribbon cable to the conductive rows and columns.

Figure 1: Fabric sensor folded open to display the vertical and horizontal conductive fabric strips.

The fabric sensor is used by placing a high voltage on a single column of the sensor and connecting a single row to a known resistance value. This resistance can be used in a voltage divider, read by an ADC. For this to produce an intelligent reading, every other column must be grounded while the other rows can float. This technique is shown in Figure 2.

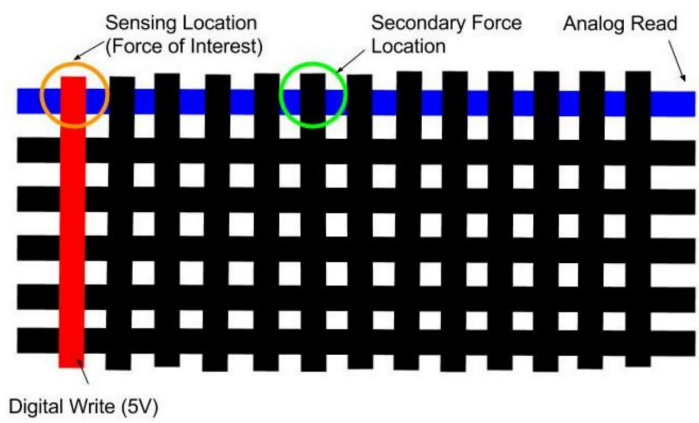

Figure 2: Fabric sensor probing procedure.

Powering a single column and connecting a single row to the voltage divider, results in the equivalent circuit shown in Figure 3 where R_c is a known resistor in a voltage divider and R_{kj} are the resistances of the fabric between the selected row (k) and each column (j).

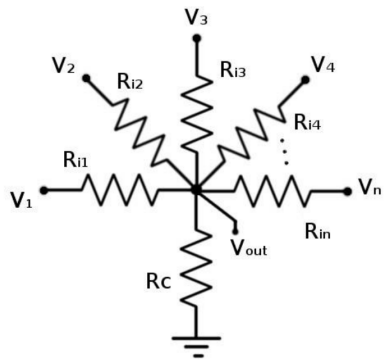

Figure 3: Fabric sensor row circuit

The current through R_c is given by Ohm's law as $i_{C_k} = \frac{V_{out,k}}{R_o}$, where k is the selected row index. However, this value can also be computing the sum of the current through each of the fabric resistors R_{ij}'s.

$$i_{C_k} = \frac{V_1 - V_{out,k}}{R_{k1}} + \frac{V_2 - V_{out,k}}{R_{k2}} \ldots + \frac{V_n - V_{out,k}}{R_{kn}} \tag{1}$$

When any given row j is powered and the rest are grounded, the equation can be simplified:

$$i_{C_kj} = \frac{-V_{out,kj}}{R_{k1}} \ldots + \frac{V_o - V_{out,kj}}{R_{kj}} \ldots + \frac{-V_{out,kj}}{R_{kn}} \tag{2}$$

The quantity i_{C_k} can further be expressed as the multiplication of $V_{\Delta,k}$ and R_k where,

$$V_{\Delta,kj} = \begin{bmatrix} -V_{out,kj} & \ldots & V_o - V_{out,kj} & \ldots & -V_{out,kj} \end{bmatrix} \tag{3}$$

$$R_k = \begin{bmatrix} \frac{1}{R_{k1}} & \frac{1}{R_{k2}} & \ldots & \frac{1}{R_{kn}} \end{bmatrix}^T \tag{4}$$

If you power every column and measure the voltage $V_{out,k}$, you can use these relationships to make a matrix $V_{\Delta,k}$ with relationship $I_{C_k} = V_{\Delta,k} R_k$ where I_{C_k} is a column vector of the current through R_o when each sensor column is powered.

$$V_{\Delta,k} = \begin{bmatrix} V_{\Delta,k1} \\ V_{\Delta,k2} \\ \vdots \\ V_{\Delta,kn} \end{bmatrix} = \begin{bmatrix} V_o - V_{out,k1} & -V_{out,k1} & \ldots & -V_{out,k1} \\ -V_{out,k2} & V_o - V_{out,k2} & \ldots & -V_{out,k2} \\ \vdots & \vdots & \vdots & \\ -V_{out,kn} & -V_{out,kn} & \ldots & V_o - V_{out,kj} \end{bmatrix} \tag{5}$$

Based on our earlier observation that $i_{C_k} = \frac{V_{out,k}}{R_o}$, I_{C_k} can be easily constructed.

$$I_{C_k} = \begin{bmatrix} \frac{V_{out,k1}}{R_o} & \frac{V_{out,k2}}{R_o} & \dots & \frac{V_{out,kn}}{R_o} \end{bmatrix}^T \tag{6}$$

Using the relationship $I_{C_k} = V_{\Delta,k} R_k$, we need to measure the output voltage after powering each column individually in order to compute the resistances of all the taxiles on a given row k.

$$R_k = V_{\Delta,k}^{-1} I_{C_k} \tag{7}$$

This means that every sensor output requires j multiplies and a single divide ($\frac{1}{R_{kj}}$) in post processing to calculate the measured resistance, where j is the number of columns. The PCB is designed for 16x64 sensors with only 16 "columns" so each resistance output requires 17 algebraic operations.

3 PCB

In this section, I will outline the PCB designed to complete the sensing of a 16x64 fabric tactile sensor. These PCB's are designed to be daisy-chained and report their sensor outputs to a single micro-controller or computer (Arduino Due, Raspberry Pi, or Odroid) via an SPI bus. A functional block diagram is shown in Figure 4 for a 3x3 fabric sensor. On the actual board, there are columns C1 - C16 and rows A1 - A64. The micro-controller signals to the binary counter to power a specific column and connect a specific row to the ADC input. The ADC then reports the voltage reading to the controller over the SPI bus.

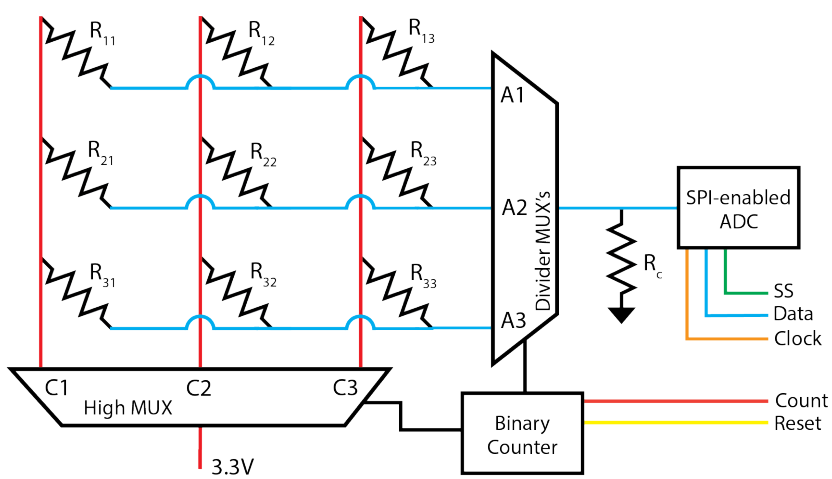

Figure 4: Tactile sensor PCB block diagram.

3.1 Binary Counter

We use the 12-bit asynchronous binary counter SN74LV4040AD by Texas Instruments. The counter has 12 outputs, each representing a single bit of a 12-bit number. The counter receives two inputs: a count signal and a reset signal. The reset signal sets all of the outputs to low. A rising edge on the count input triggers the counter which increments the 12-bit output accordingly. If the count gets to 2^{12}, it restarts at 0. Both of these pins are daisy-chained between each sensor and driven by standard IO pins from the micro-controller. At full speed, the count pin will look like a square wave with frequency around 500kHz and duty cycle <10%.

3.2 Multiplexers

We use one 4-channel analog multiplexer TMUX1204DGSR and five 16-channel analog multiplexers CD74HC4067SM96 both by Texas Instruments. We use a single 16-channel MUX for the columns and the other four 16-channel MUX's in series with the 4-channel MUX to make an effective 64-channel MUX for the rows. This gives us the ability to switch between 16 columns and 64 rows. The channel that is selected by the MUX's is defined by a binary input represented as a logic-high or logic-low level on numerous input pins.

In order for the post-processing to work correctly, every column besides the one which is activated needs to be grounded. However, the MUX will just float the other columns. In order to solve this problem, we connect a small-value pull down resistor to each column. This will waste some power, but will greatly improve our resistance measurements. This network of pulldown resistors is shown in Figure 5.

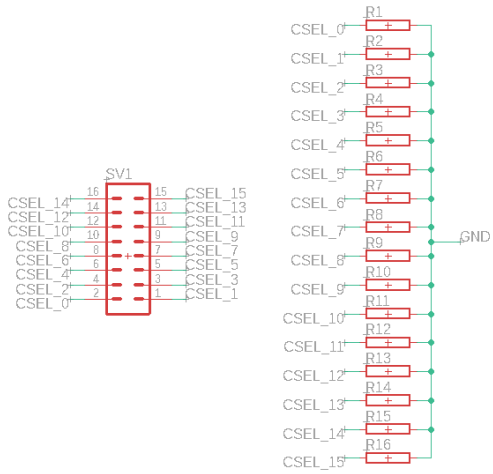

Figure 5: Schematic of pull-down resistor breakout board.

The 4-channel MUX has $\log_2 4 = 2$ input pins and the 16-channel MUX has $\log_2 16 = 4$ input pins. These input pins are connected to the outputs of the binary counter. The first four counter outputs are connected to the four input pins for the column MUX. The next two counter ouputs are connected to the two input pins of the 4-channel row MUX. The next four counter outputs are connected to the four input pins of all four 16-channel row MUX's. The last two counter outputs are not connected. This means that for each count increment, a new tactile sensor is selected.

3.3 SPI-enabled ADC

We use a 12-bit 12MSPS ADC MAX11103AUB+ by Maxim Integrated to measure the voltage at the divider. This ADC is SPI-enabled and so can communicate directly with the micro-controller. The micro-controller supplies a clock signal for the timing and as slave-select signal so that it can communicate with multiple boards. The ADC takes and sends a measurement immediately when the SS pin is forced low. The voltage divider resistor is realized through a 3kOhm potentiometer so it can be adjusted depending on the application. The speed of the ADC clock will largely determine how fast the sensors can report data. A clock speed of 50MHz is my recommended maximum.

3.4 Wire Terminations

It should be noted that there are several potentioments on the PCB. These are for terminating the high-frequency signals. The SPI and binary counter signals are high frequency and are being transmitted over long distances of 2-3 meters. The difficulty of using SPI over long distance with high frequencies is two fold. The first problem cannot be solved in hardware and is the fact that electric signals cannot travel faster than the speed of light (usually around 2/3 speed of light) and thus the two chips are not actually on the same clock (one is behind). That problem must be fixed in software. The second problem applies for all high frequency signals of long distance and is that there will be a noisy transient response on the wires if they are not terminated correctly. For this reason, we use Cat5 cables for communication because they have a known characteristic impedance of 100Ω to 120Ω. They should be terminated with an equivalent resistance. These are the three 200Ω potentiometers on the PCB. The SS pin is always connected because it is not a bus. However, the SPI clock and binary counter signals should only be connected if they are the last PCB in the chain. Quite literally, these resistors should only be connected when they are "terminating" the bus. This is why there are jumpers to connect and disconnect the termination resistors. Note that on the micro-controller side, the data line should be terminated with a similar resistor or the data might be gibberish.

3.5 Schematic and Board

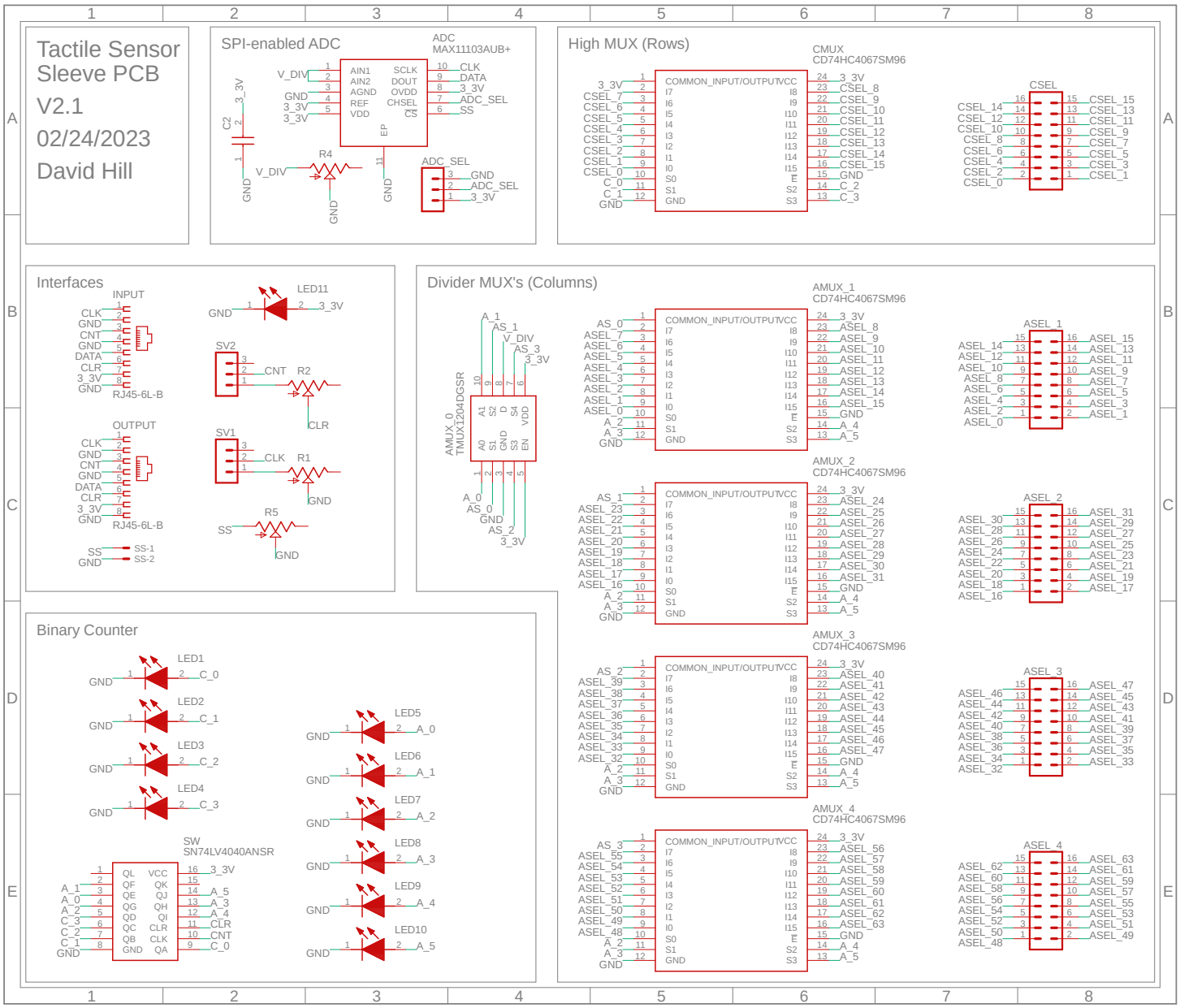

2/24/2023 12:04 PM f=0.90 C:\Users\hilld\Documents\EAGLE\projects\radlab_pcbs\tactile_sensor_v2.0\tactile_sensor.sch (Sheet: 1/1)

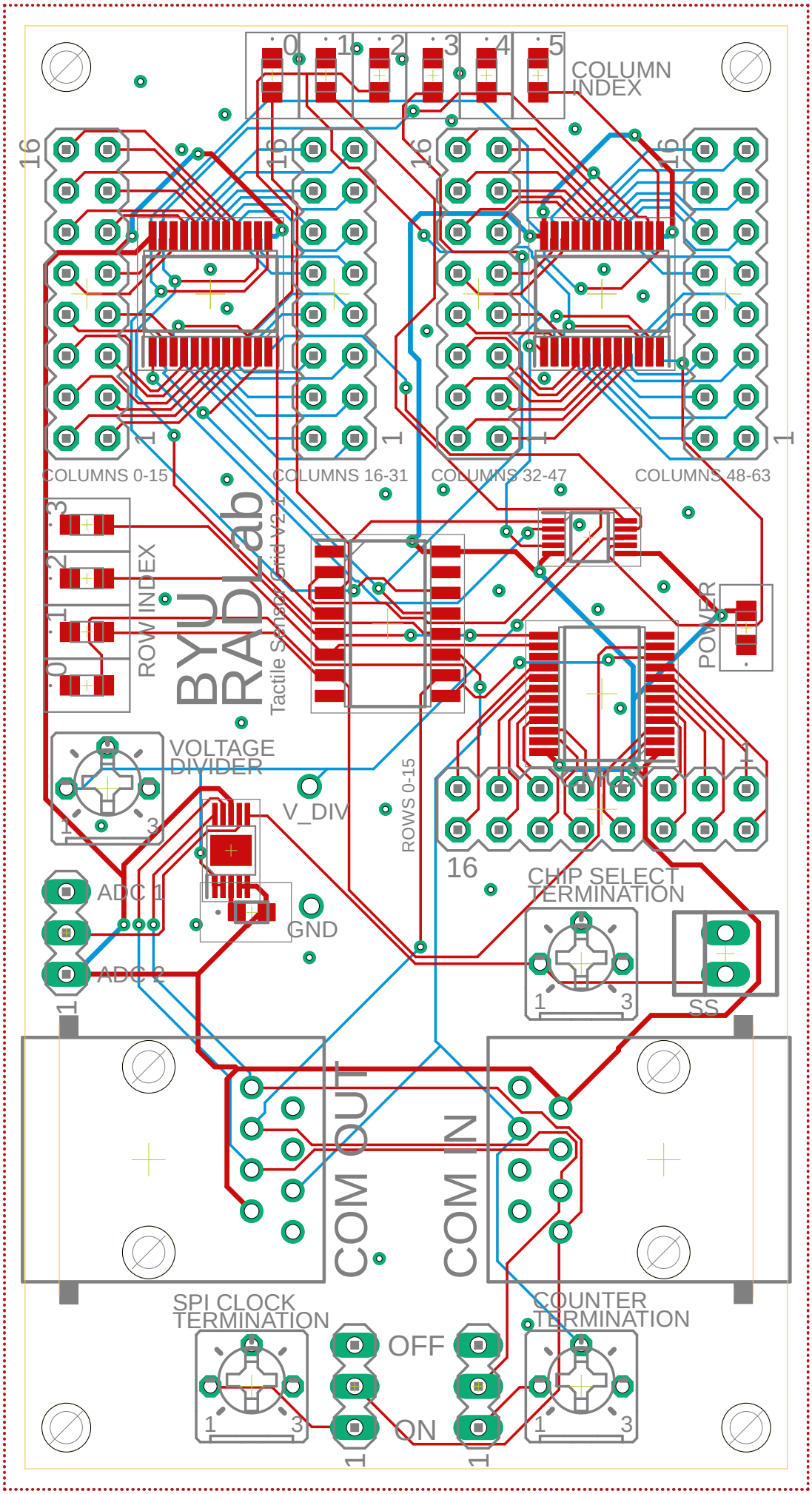

2/24/2023 12:06 PM f=2.90 C:\Users\hilld\Documents\EAGLE\projects\radlab_pcbs\tactile_sensor_v2.0\tactile_sensor.brd

4 System Identification and Calibration

In general, the system is identified by loading the sensor grid with a known force and measuring the resistance of the entire grid. Repeat this with different known forces and a linear correlation will emerge between resistance and force. From the data points, find the equation of the line which fits the correlation resistance to force. If you don't think a linear equation is accurate enough, a different fit can be used.

The following has not been implemented, but I think it is promising. A known issue with the fabric sensor is its hysteresis. This causes large errors in the force estimation when a load is applied or removed quickly as shown in Figure 6.

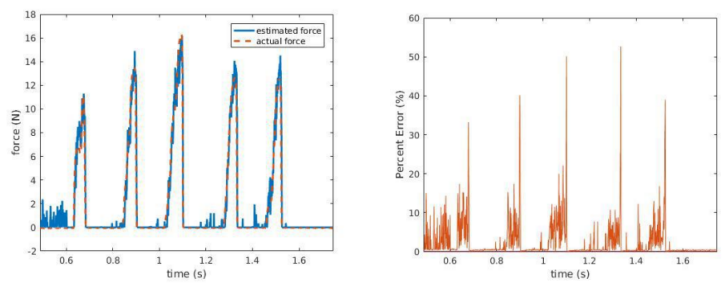

Figure 6: Left: Estimated force versus actual force. Right: Percent error of the estimated force.

It is hypothesized that the fabric is acting an a non-ideal low-pass filter with some unknown impulse response $g[n]$. I propose that we use adaptive equalization using a test input $t[n]$ in order to estimate the inverse filter $h[n]$ which can be used to estimate more accurately an input $x[n]$ based on the fabric-filtered measurements $z[n]$. This concept is demonstrated in Figure 7. I believe that this approach will help because we can sample at or near 100Hz which can theoretically fix signals with bandwidths up to 50Hz.

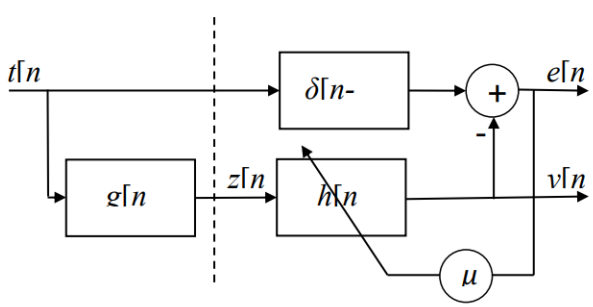

Figure 7: Adaptive equalization diagram using an LMS adaptive filter scheme.

References

[1] Nathan McClain Day. *Tactile sensing and position estimation methods for increased proprioception of soft-robotic platforms*. Brigham Young University, 2018.