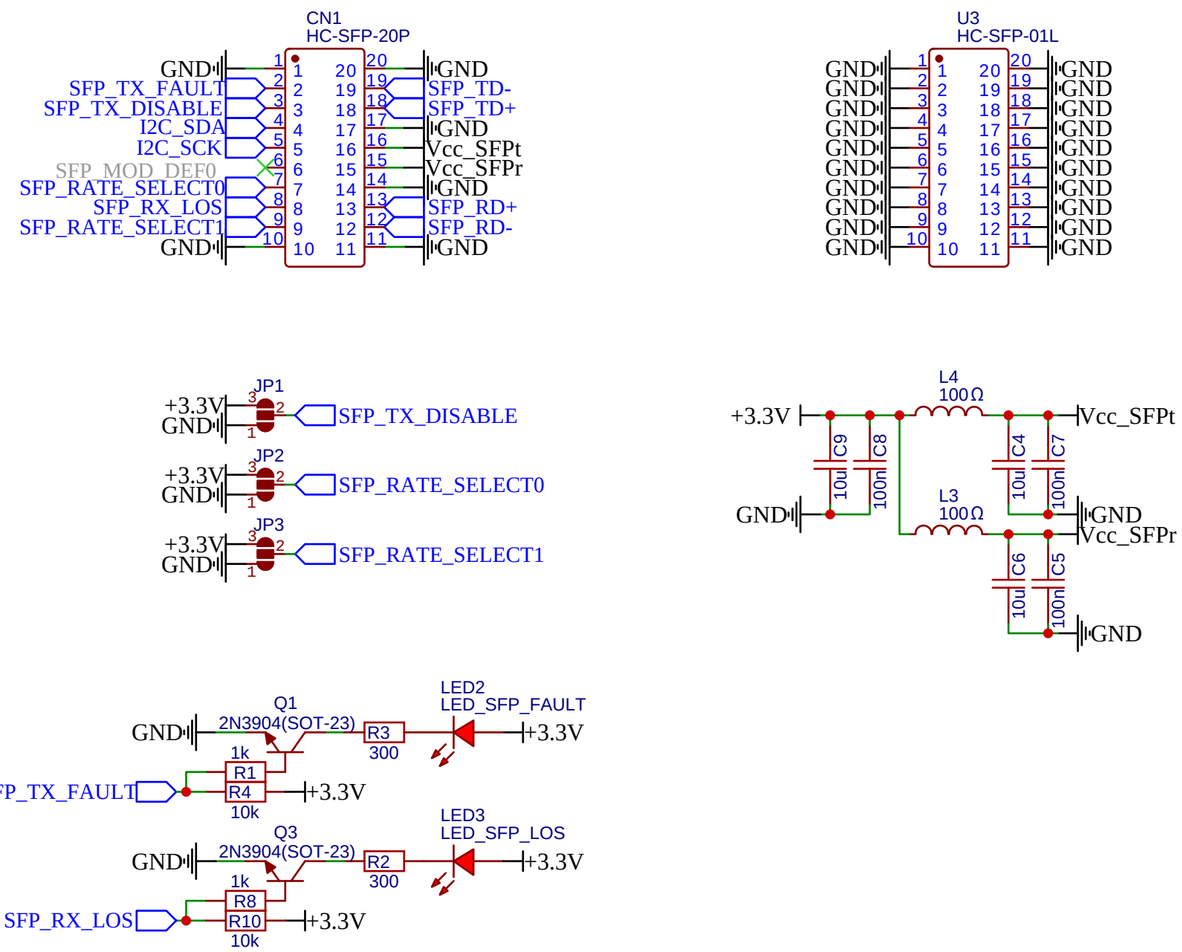


| | | |
|---|---|---|
| TITLE: Sheet_1 | | REV: 1.0 |
| EasyEDA | Company: Your Company | Sheet: 1/1 |
| | Date: 2024-07-08 Drawn By: TheStaticTurtle | |

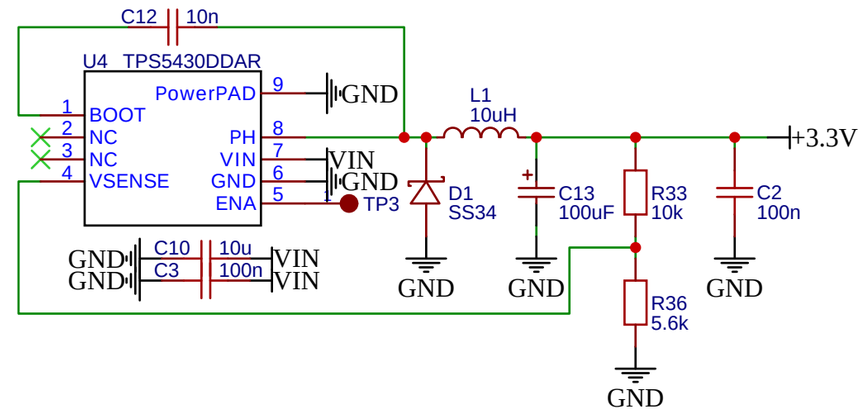


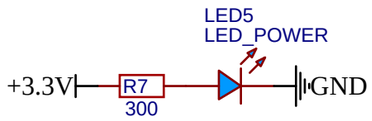


| | | |
|---|---|---|
| TITLE: Sheet_1 | | REV: 1.0 |
| EasyEDA | Company: Your Company | Sheet: 1/1 |
| | Date: 2024-09-07 Drawn By: TheStaticTurtle | |

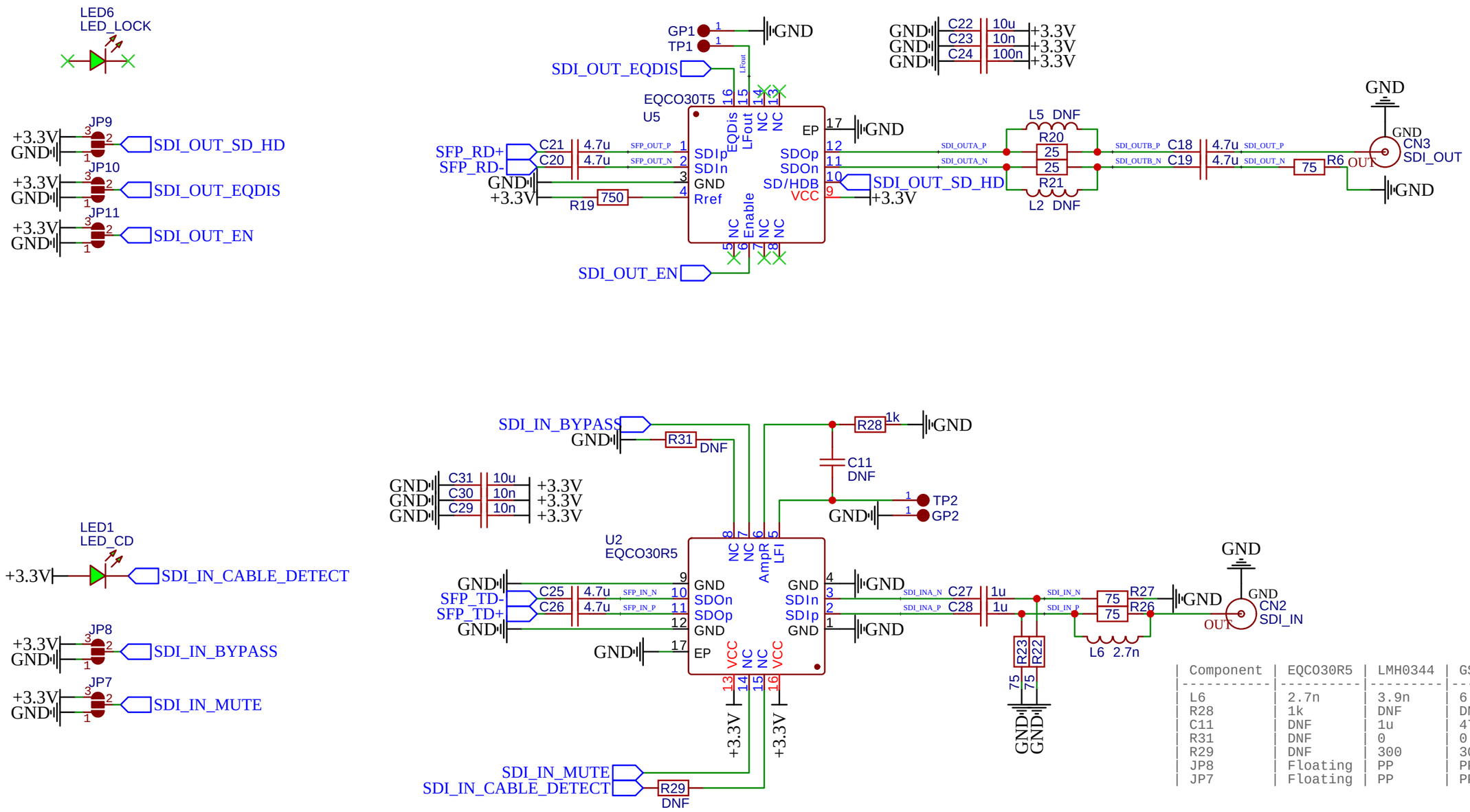


| Component | EQCO30R5 | LMH0344 | GS2994 |
|---|---|---|---|
| L6 | 2.7n | 3.9n | 6.2n |
| R28 | 1k | DNF | DNF |
| C11 | DNF | 1u | 470n |
| R31 | DNF | 0 | 0 |
| R29 | DNF | 300 | 300 |
| JP8 | Floating | PP | PP |
| JP7 | Floating | PP | PP |

| | | |
|---|---|---|
| TITLE: Sheet_1 | | REV: 1.0 |
| EasyEDA | Company: Your Company | Sheet: 1/1 |
| | Date: 2024-09-07 Drawn By: TheStaticTurtle | |

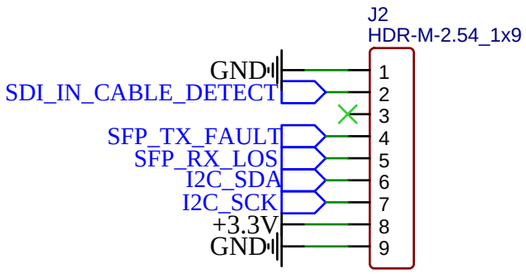


| | | |
|---|---|---|
| TITLE: Sheet_1 | | REV: 1.0 |
| EasyEDA | Company: Your Company | Sheet: 1/1 |
| | Date: 2024-09-21 Drawn By: TheStaticTurtle | |