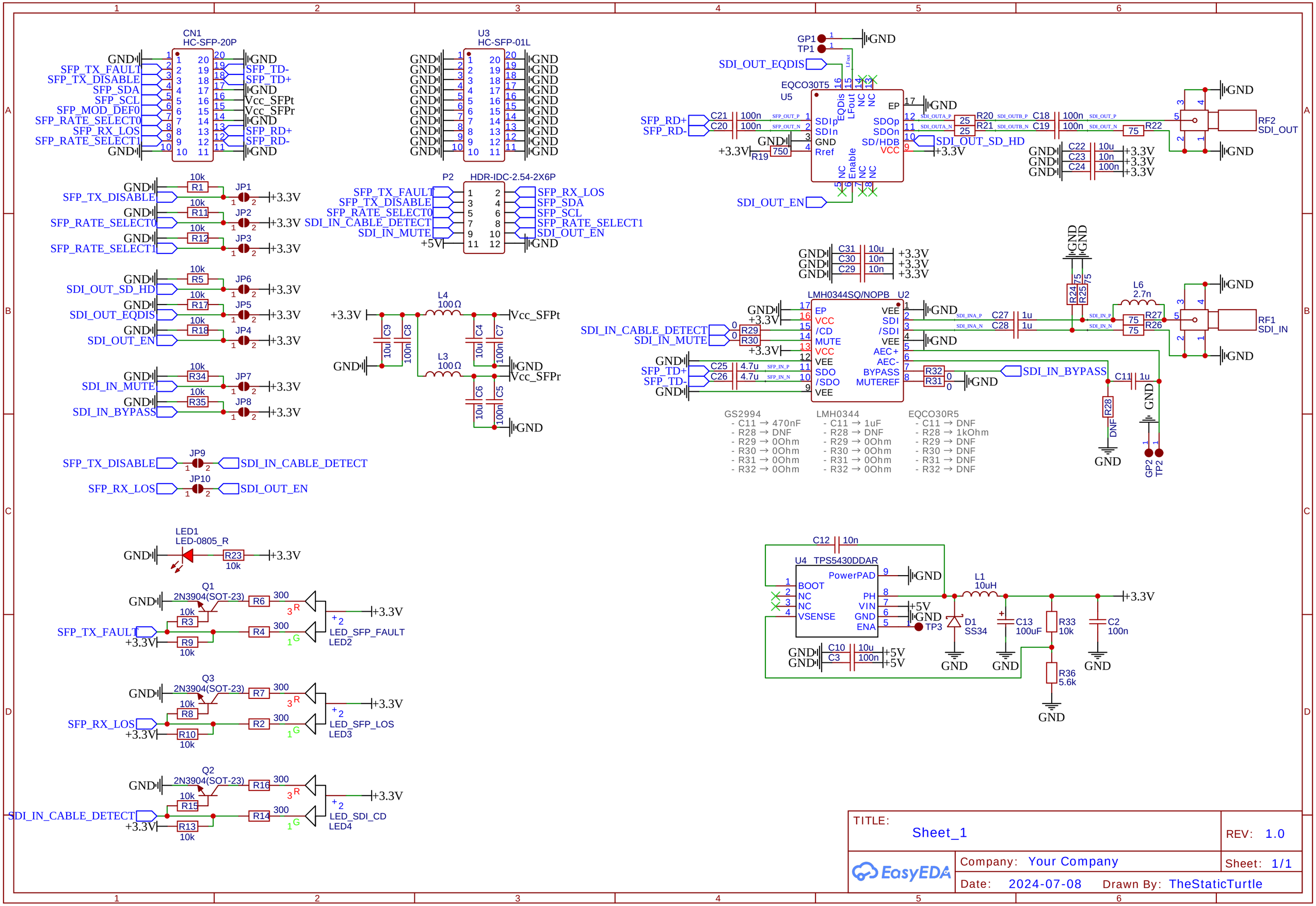
CN1
HC-SFP-20P
U3
HC-SFP-01L
GND
SFP_TX_FAULT
SFP_TX_DISABLE
SFP_SDA
SFP_SCL
SFP_MOD_DEF0
SFP_RATE_SELECT0
SFP_RX_LOS
SFP_RATE_SELECT1
SFP_TD-
SFP_TD+
Vcc_SFPt
Vcc_SFPr
SFP_RD+
SFP_RD-
P2
HDR-IDC-2.54-2X6P
SDI_IN_CABLE_DETECT
SDI_IN_MUTE
+5V
SDI_OUT_SD_HD
SDI_OUT_EQDIS
SDI_OUT_EN
SDI_IN_BYPASS
+3.3V
L4
100Ω
L3
100Ω
JP1
JP2
JP3
JP4
JP5
JP6
JP7
JP8
JP9
JP10
LED1
LED-0805_R
Q1
2N3904(SOT-23)
Q3
Q2
LED_SFP_FAULT
LED2
LED_SFP_LOS
LED3
LED_SDI_CD
LED4
EQCO30T5
U5
SDIp
SDIn
Rref
EQDis
LFout
SDOp
SDOn
SD/HDB
VCC
Enable
EP
SDI_OUT_P
SDI_OUT_N
SDI_OUTA_P
SDI_OUTA_N
SDI_OUTB_P
SDI_OUTB_N
GP1
TP1
RF2
SDI_OUT
LMH0344SQ/NOPB
U2
/CD
MUTE
/SDI
/SDO
AEC+
AEC-
BYPASS
MUTEREF
SDI_INA_P
SDI_INA_N
SDI_IN_P
SDI_IN_N
RF1
SDI_IN
GP2
TP2
GS2994
- C11 → 470nF
- R28 → DNF
- R29 → 0Ohm
- R30 → 0Ohm
- R31 → 0Ohm
- R32 → 0Ohm
LMH0344
- C11 → 1uF
- R28 → DNF
- R29 → 0Ohm
- R30 → 0Ohm
- R31 → 0Ohm
- R32 → 0Ohm
EQCO30R5
- C11 → DNF
- R28 → 1kOhm
- R29 → DNF
- R30 → DNF
- R31 → DNF
- R32 → DNF
U4 TPS5430DDAR
PowerPAD
BOOT
NC
VSENSE
PH
VIN
ENA
TP3
D1
SS34
L1
10uH
C12
10n
C13
100uF
R33
10k
R36
5.6k
C2
100n
TITLE:
Sheet_1
REV: 1.0
Company: Your Company
Sheet: 1/1
Date: 2024-07-08
Drawn By: TheStaticTurtle
EasyEDA