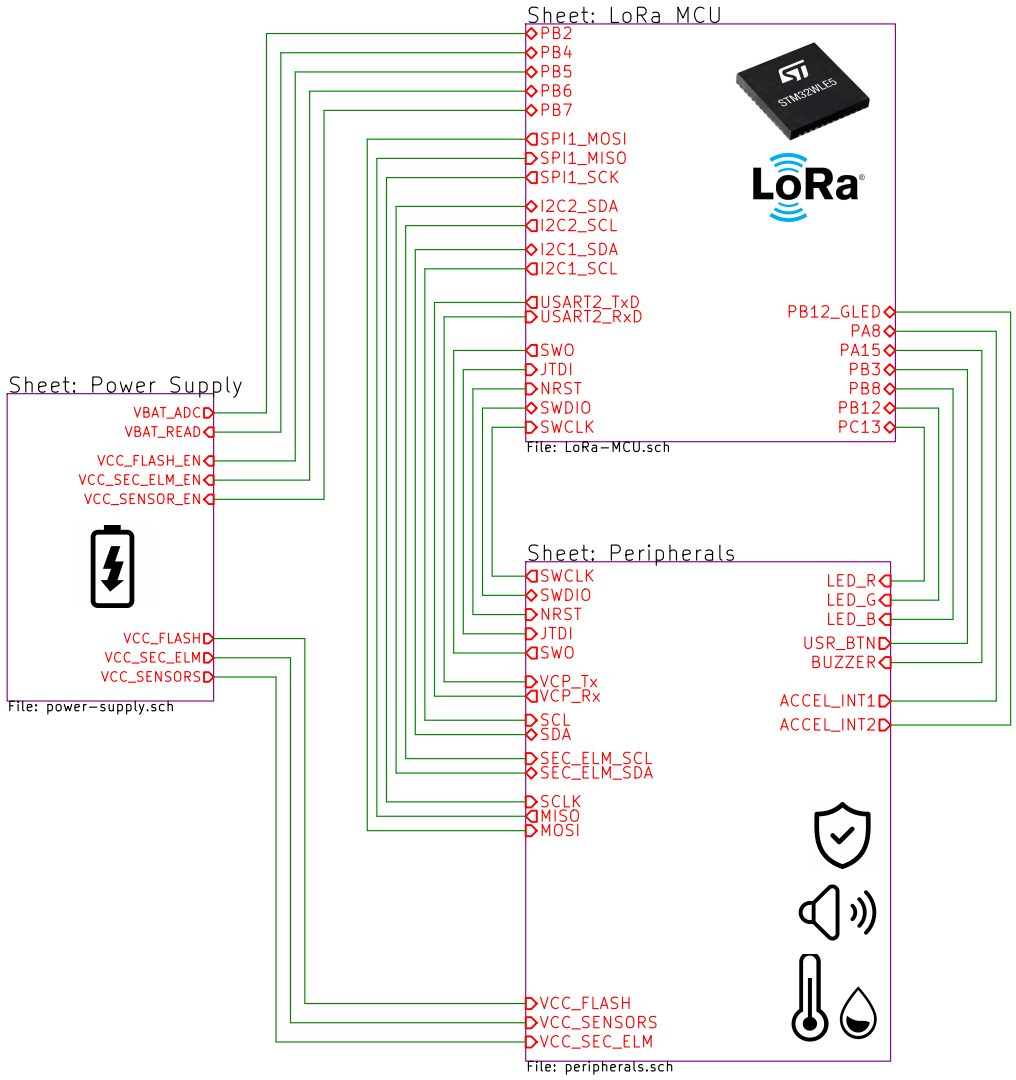

Drawn by: Orkhan Amiraslanov (azerimaker)
https://www.thethingsindustries.com/
The Things Industries

Sheet: /
File: ST-Node-V0.1.sch

Title: ST LoRA Node

Size: A4	Date: 2020-04-07	**Rev: 0.1**
KiCad E.D.A. kicad (5.1.6)-1		Id: 1/4

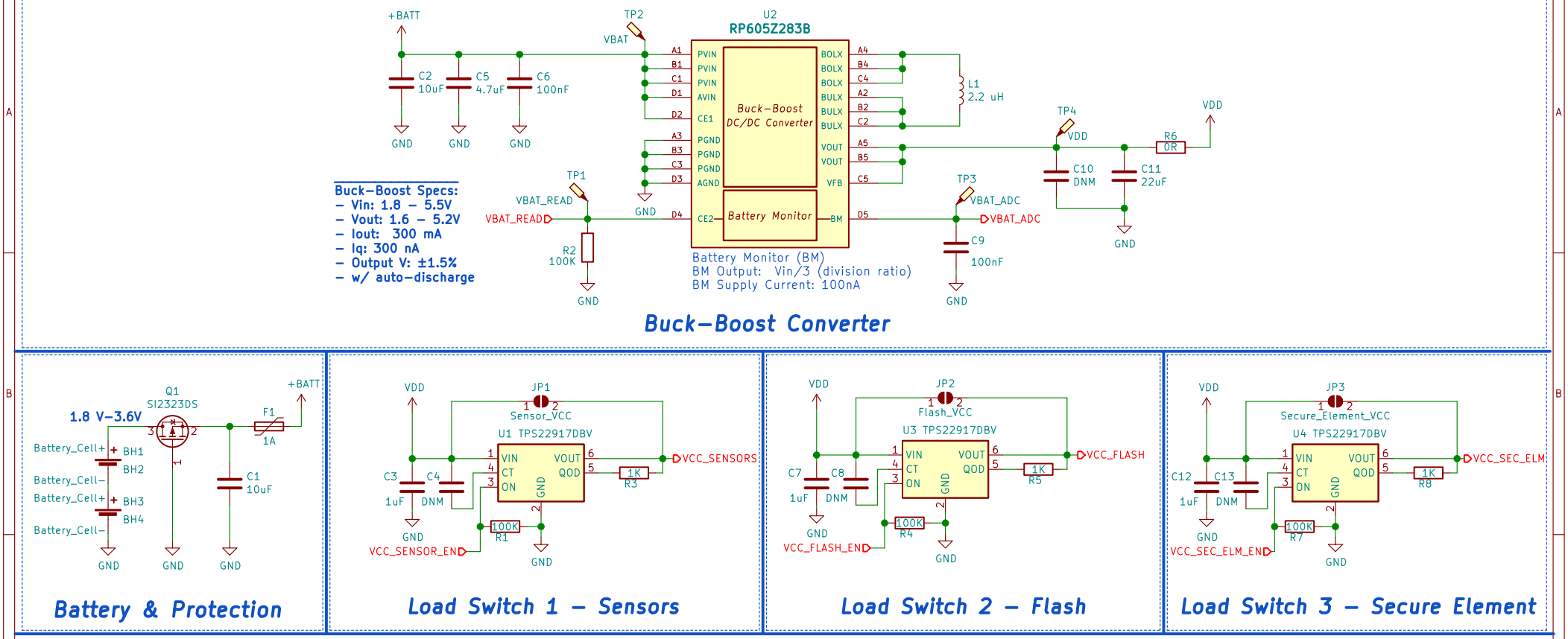

Example: Energizer Lithium Batteries L91
Voltage: 1.5 V
Capacity: >3000 mAh
Size (mm): AA 50.5mm x 14.5mm
Operating Temp: -40 °C to +60 °C

Mechanical parts and Fiducials

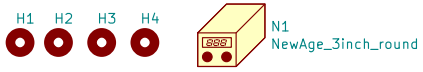

Drawn by: Orkhan Amiraslanov (azerimaker)
https://www.thethingsindustries.com/
The Things Industries

Sheet: /Power Supply/
File: power-supply.sch

Title: Power Supply & Load Switches

Size: A4	Date: 2020-04-07	**Rev: 0.1**
KiCad E.D.A. kicad (5.1.6)-1		Id: 2/4

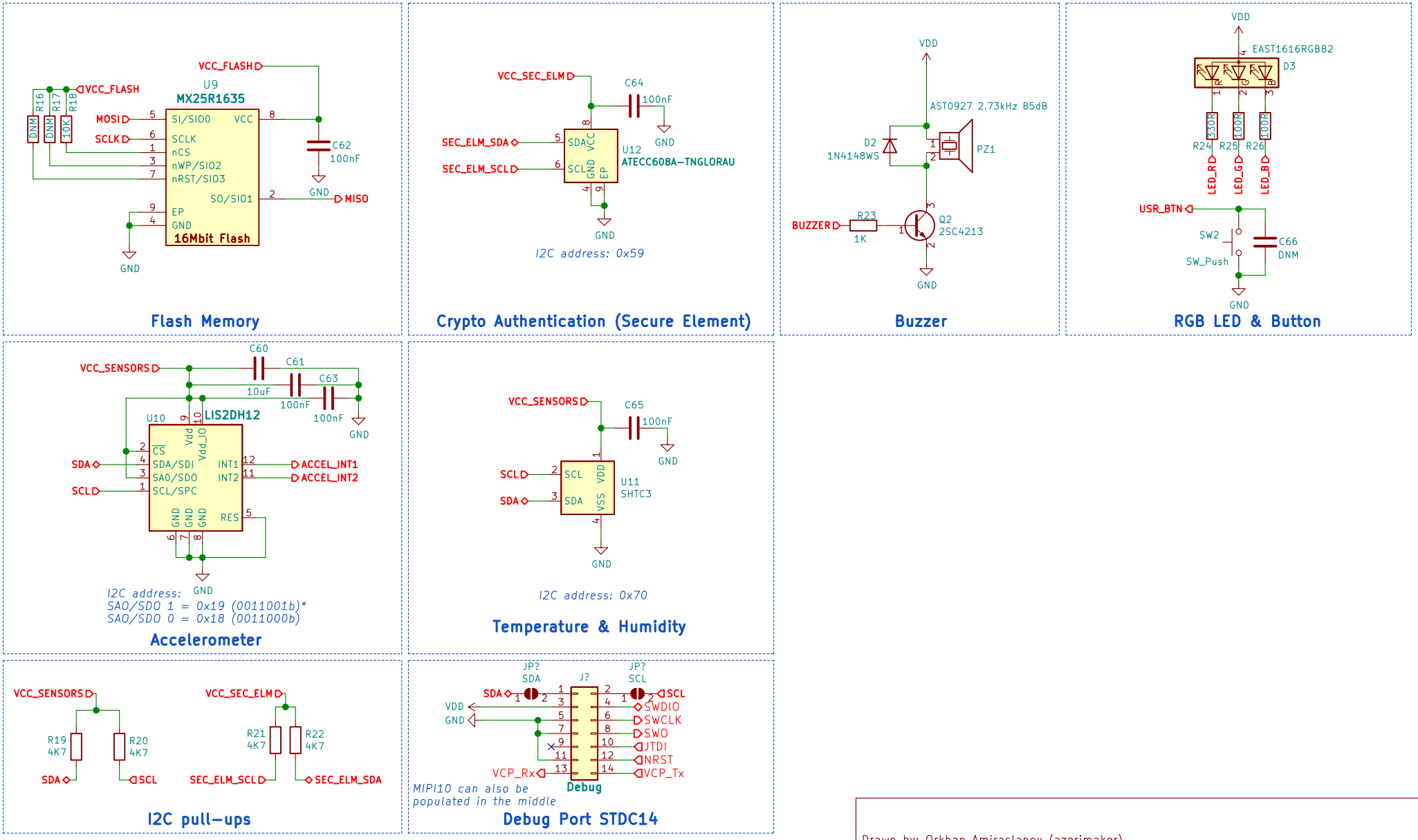

Drawn by: Orkhan Amiraslanov (azerimaker)
https://www.thethingsindustries.com/
The Things Industries

Sheet: /Peripherals/
File: peripherals.sch

Title: Sensors & Peripherals

Size: A4	Date: 2020-04-07	**Rev: 0.1**
KiCad E.D.A. kicad (5.1.6)-1		Id: 3/4

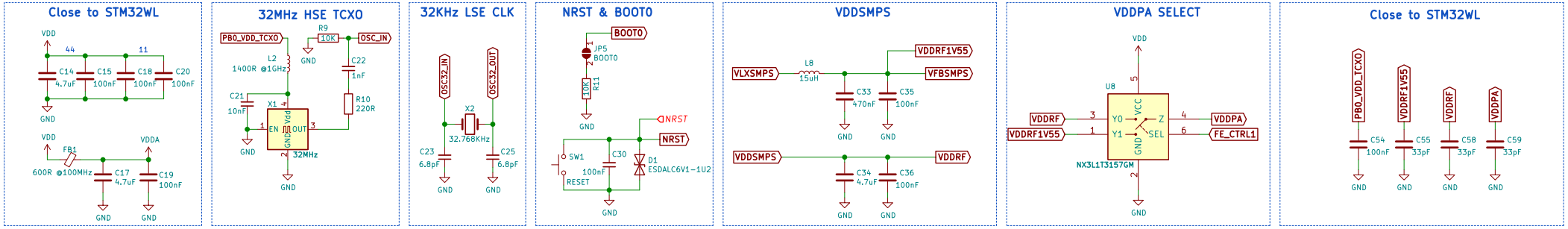

RF front-end configuration	FE_CTRL1	FE_CTRL2	FE_CTRL3
TX high output power	LOW	HIGH	HIGH
TX low output power	HIGH	HIGH	HIGH
RX	HIGH	LOW	HIGH

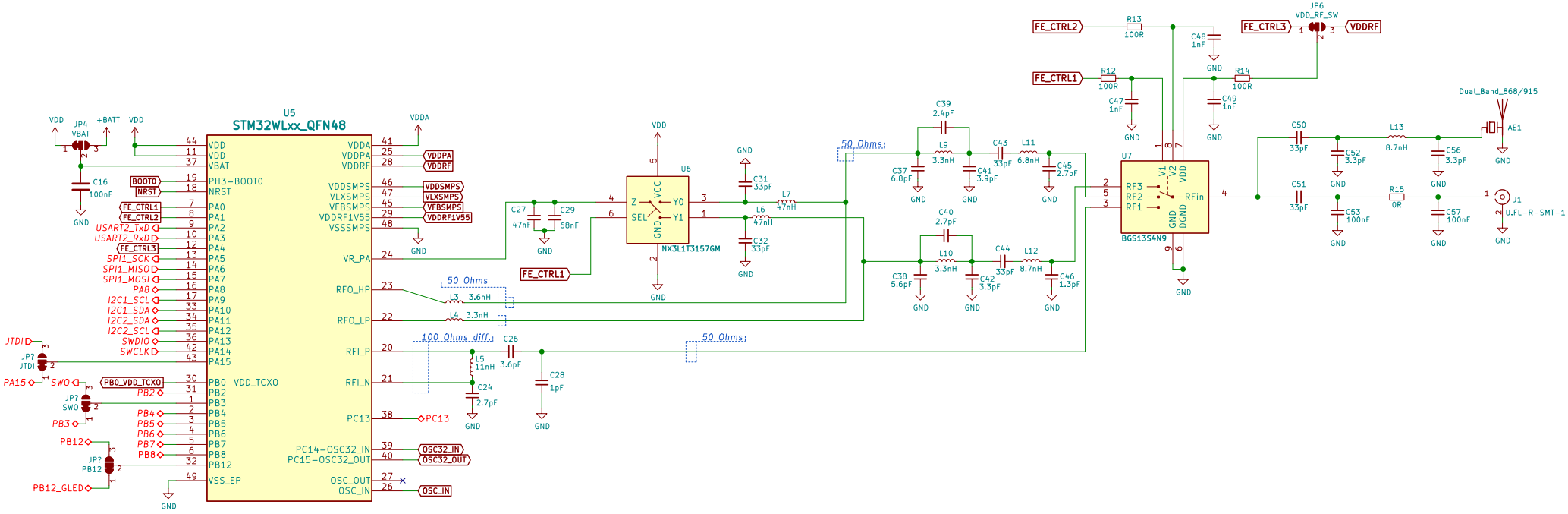

Drawn by: Orkhan Amiraslanov (azerimaker)
https://www.thethingsindustries.com/
The Things Industries

Sheet: /LoRa MCU/
File: LoRa-MCU.sch

Title: STM32WL LoRa SoC

Size: A3	Date: 2020-04-07	**Rev: 0.1**
KiCad E.D.A. kicad (5.1.6)-1		Id: 4/4