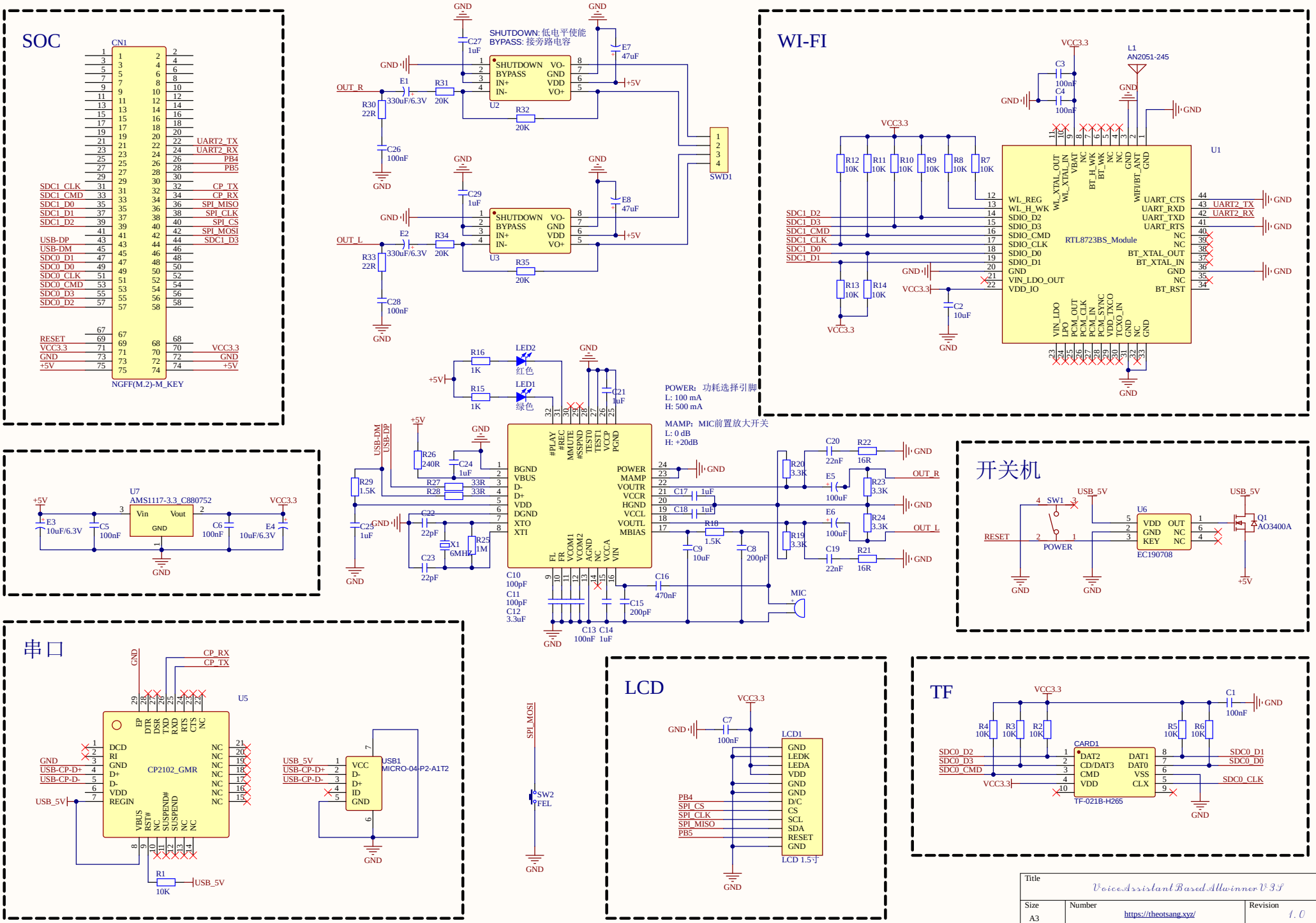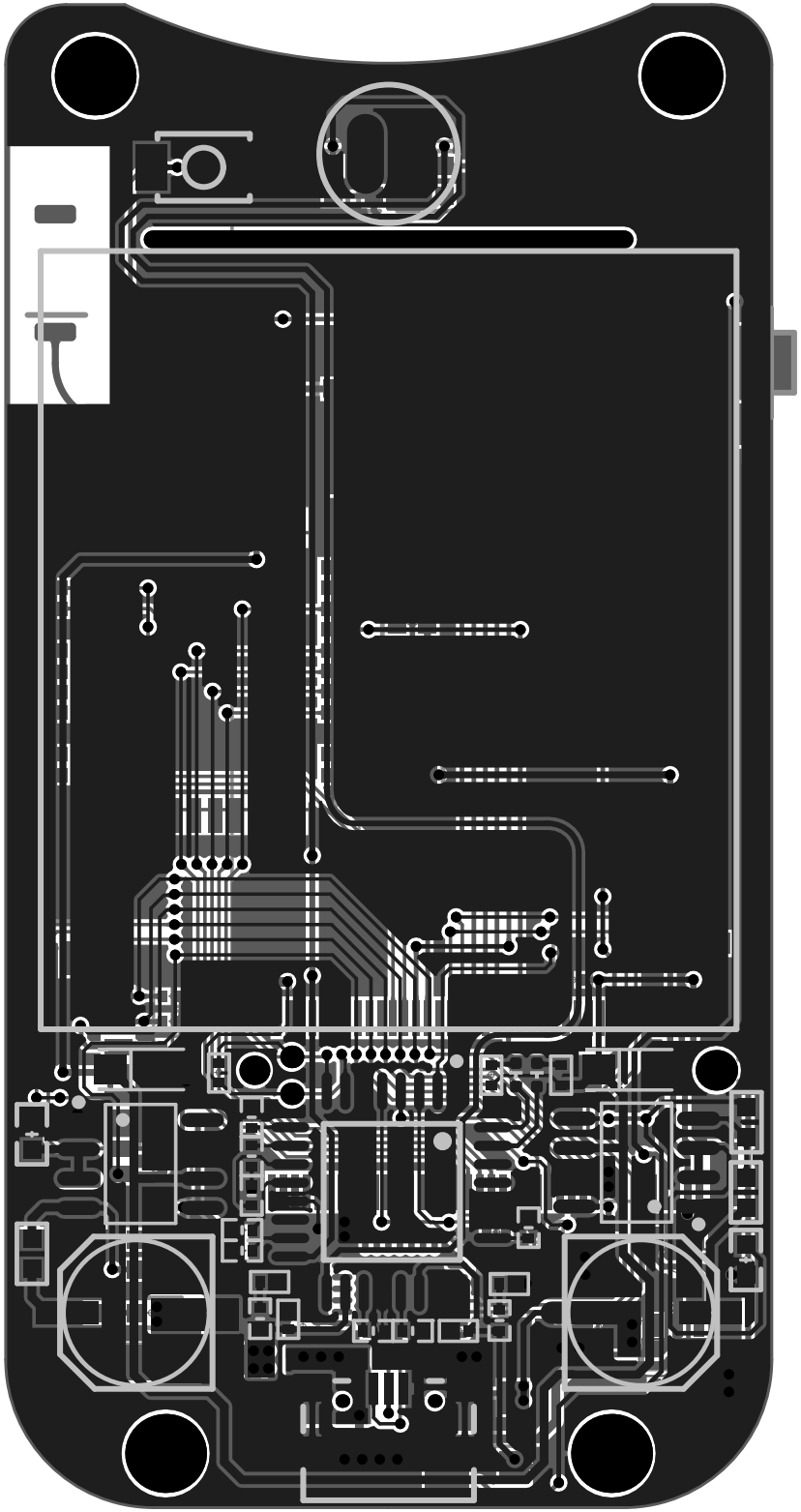
SOC
CN1
NGFF(M.2)-M_KEY
SHUTDOWN: 低电平使能
BYPASS: 接旁路电容
SHUTDOWN VO-
BYPASS GND
IN+ VDD
IN- VO+
U2
U3
SWD1
WI-FI
U1
RTL8723BS_Module
L1
AN2051-245
POWER: 功耗选择引脚
L: 100 mA
H: 500 mA
MAMP: MIC前置放大开关
L: 0 dB
H: +20dB
LED2 红色
LED1 绿色
U7
AMS1117-3.3_C880752
开关机
U6
EC190708
Q1
AO3400A
串口
U5
CP2102_GMR
USB1
MICRO-04-P2-A1T2
SW2
FEL
LCD
LCD1
LCD 1.5寸
TF
CARD1
TF-021B-H265
Title
VoiceAssistantBasedAllwinnerV3S
Size
A3
Number
https://theotsang.xyz/
Revision
1.0
Date: 5/15/2022
Sheet of
File: D:\资料\..\Sheet1.SchDoc
Drawn By: Theo Tang