Advanced Computer Architectures
(High Performance Processors and Systems)

Dynamic Scheduling: Tomasulo Algorithm

Politecnico di Milano

v1

Alessandro Verosimile < alessandro.verosimile@polimi.it>
Marco D. Santambrogio <marco.santambrogio@polimi.it>

EXE ON APRIL 23: ONLINE

EXE ON APRIL 23: ONLINE ON APRIL 28, 2025 @6PM

EXE ON APRIL 23: ONLINE ON APRIL 28, 2025 @6PM

DEIB CONFERENCE ROOM

EXE ON APRIL 23: ONLINE

ON APRIL 28, 2025 @6PM

DEIB CONFERENCE ROOM

HPPS/ACA MIDTERM

Outline

- Tomasulo algorithm
- Comparison between Scoreboard and Tomasulo

Tomasulo Algorithm

- Another dynamic algorithm: allows execution to proceed in the presence of dependences
- Invented at IBM 3 years after CDC 6600 for the IBM 360/91
- Same Goal: high performance w/o special compilers
- Lead to:
  - Alpha 21264, HP 8000, MIPS 10000, Pentium II, PowerPC 604

Tomasulo Algorithm Basics

- The control logic and the buffers are distributed with FUs (vs. centralized in scoreboard)
- Operand buffers are called Reservation Stations

Scoreboard Architecture (CDC 6600)

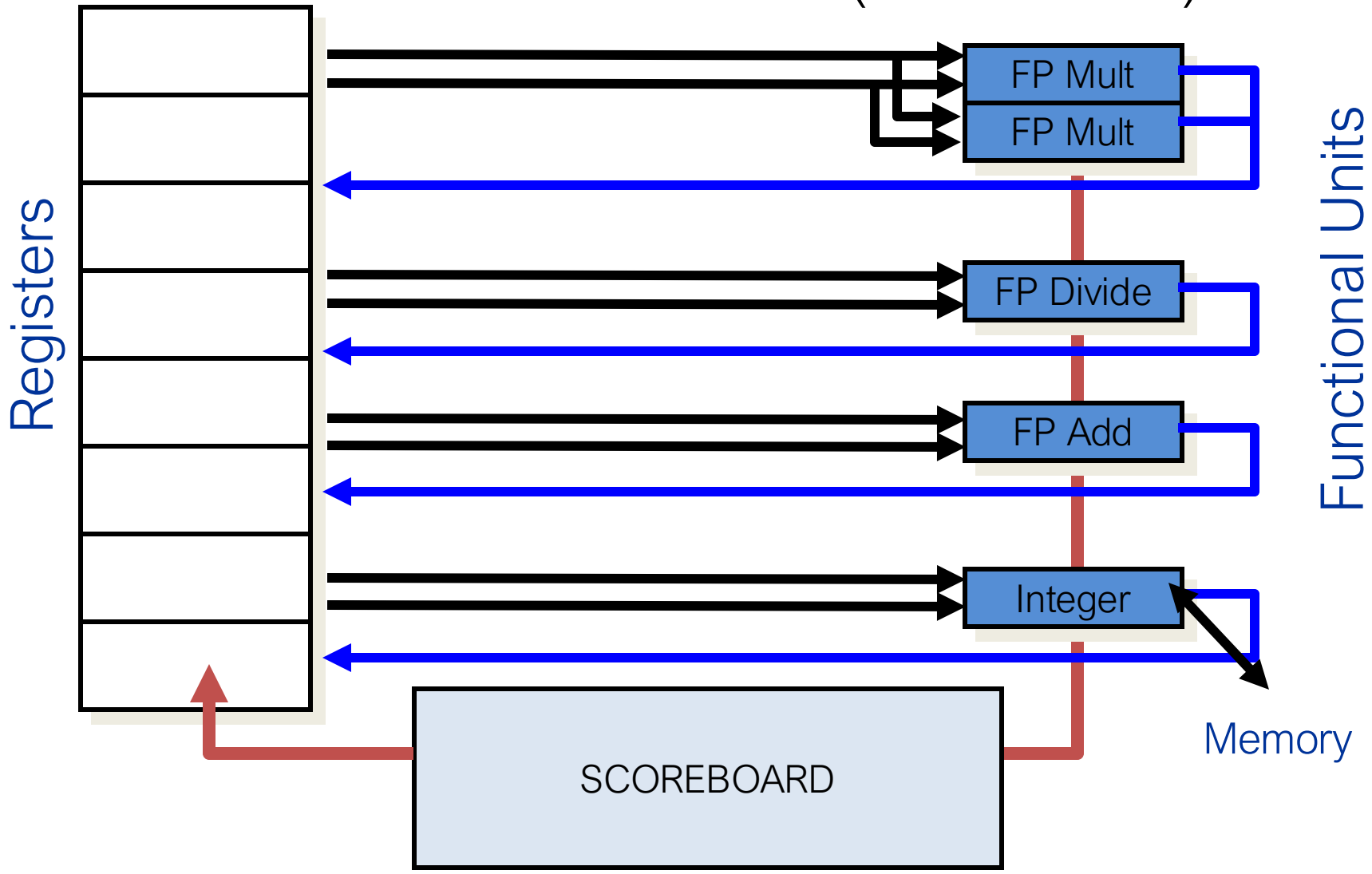

Tomasulo Algorithm Basics

- The control logic and the buffers are distributed with FUs (vs. centralized in scoreboard)
- Operand buffers are called Reservation Stations
- Each instruction is an entry of a reservation station

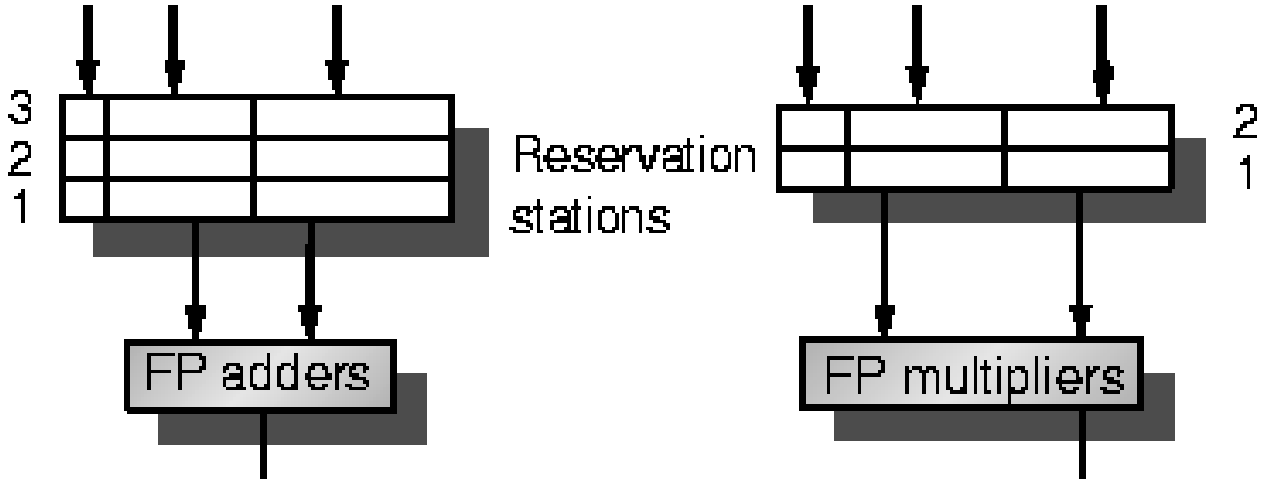

Tomasulo Algorithm Basics

- The control logic and the buffers are distributed with FUs (vs. centralized in scoreboard)
- Operand buffers are called Reservation Stations
- Each instruction is an entry of a reservation station
- Its operands are replaced by values or pointers (Register Renaming)

Tomasulo Algorithm Basics

- Register Renaming allows to:
  - Avoid WAR and WAW hazards
  - Reservation stations are more than registers (so can do better optimizations than a compiler).
- Results are dispatched to other FUs through a Common Data Bus (CDB)
- Load/Stores treated as FUs

Tomasulo Algorithm for an FPU

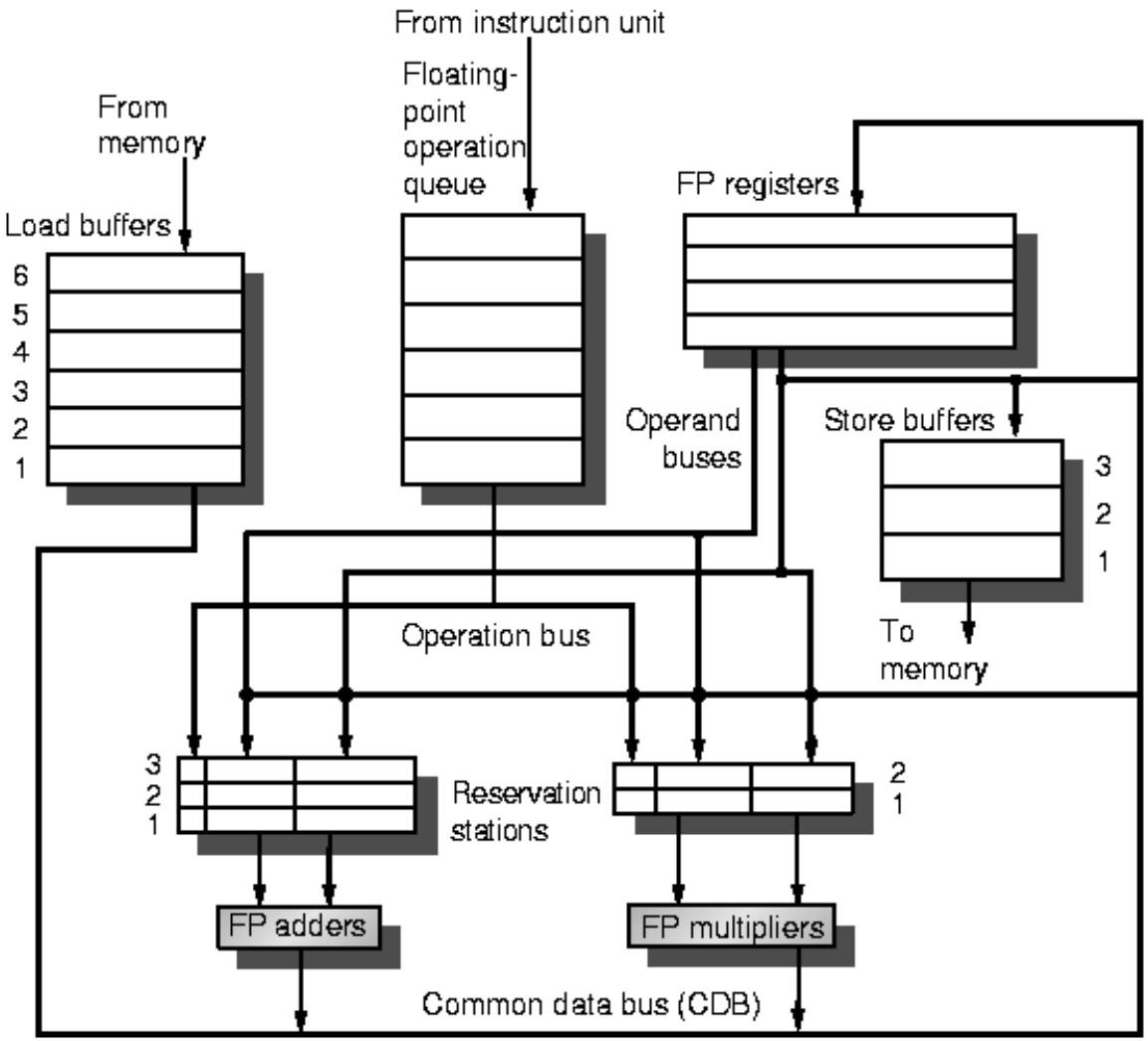

Reservation Station Components

- Tag identifying the RS
- OP = the operation to perform on the component
- Vj, Vk = Value of the source operands
- Qj,Qk = Pointers to RS that produce Vj,Vk
  Zero value = Source op. is already available in Vj or Vk
- Busy = Indicates RS Busy
- Note: Only one of V-field or Q-field is valid for each operand

ISSUE: 3-stage Tomasulo

- Get an instruction I from the queue.
  - If it is an FP op. Check if a RS is empty (i.e., check for structural hazards)
- Rename registers
- WAR resolution
  - If I writes Rx, read by an instruction K already issued, K knows already the value of Rx or knows what instruction will write it. So the RF can be linked to I
- WAW resolution
  - Since we use in-order issue, the RF can be linked to I

EXECUTION: 3-stage Tomasulo

- When both operands are ready then execute.
- If not ready, watch the common data bus for results.
  - By delaying execution until operands are available, RAW hazards are avoided.
    Notice that several instructions could become ready in the same clock cycle for the same FU.
- Load and stores: two-step process
  - First step: compute effective address, place it in load or store buffer.
  - Loads in Load Buffer execute as soon as memory unit is available
  - Stores in store buffer wait for the value to be stored before being sent to memory unit.

WRITE: 3-stage Tomasulo

- When result is available: write on Common Data Bus and from there into RF and into all RSs (including store buffers) waiting for this result
- Stores write data to memory during this stage
- Mark reservation stations available.

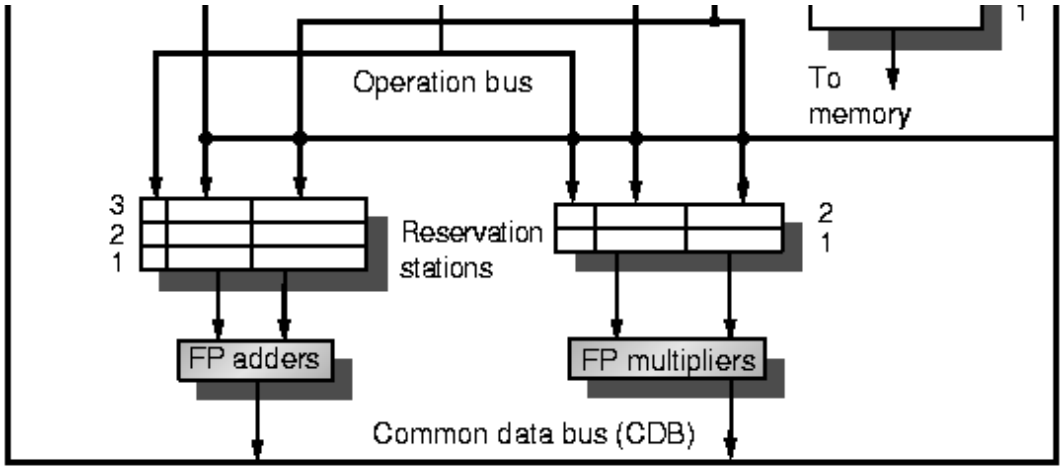

Tomasulo Example

Instruction status:

Instruction		*j*	*k*	*Issue*	*Exec Comp*	*Write Result*
LD	F6	34+	R2			
LD	F2	45+	R3			
MULTD	F0	F2	F4			
SUBD	F8	F6	F2			
DIVD	F10	F0	F6			
ADDD	F6	F8	F2			

	Busy	Address
Load1	No	
Load2	No	
Load3	No	

Reservation Stations:

Time	*Name*	*Busy*	*Op*	*S1 Vj*	*S2 Vk*	*RS Qj*	*RS Qk*
	Add1	No					
	Add2	No					
	Add3	No					
	Mult1	No					
	Mult2	No					

Register result status:

Clock		*F0*	*F2*	*F4*	*F6*	*F8*	*F10*	*F12*	...	*F30*
0	*FU*									

Tomasulo Algorithm for an FPU

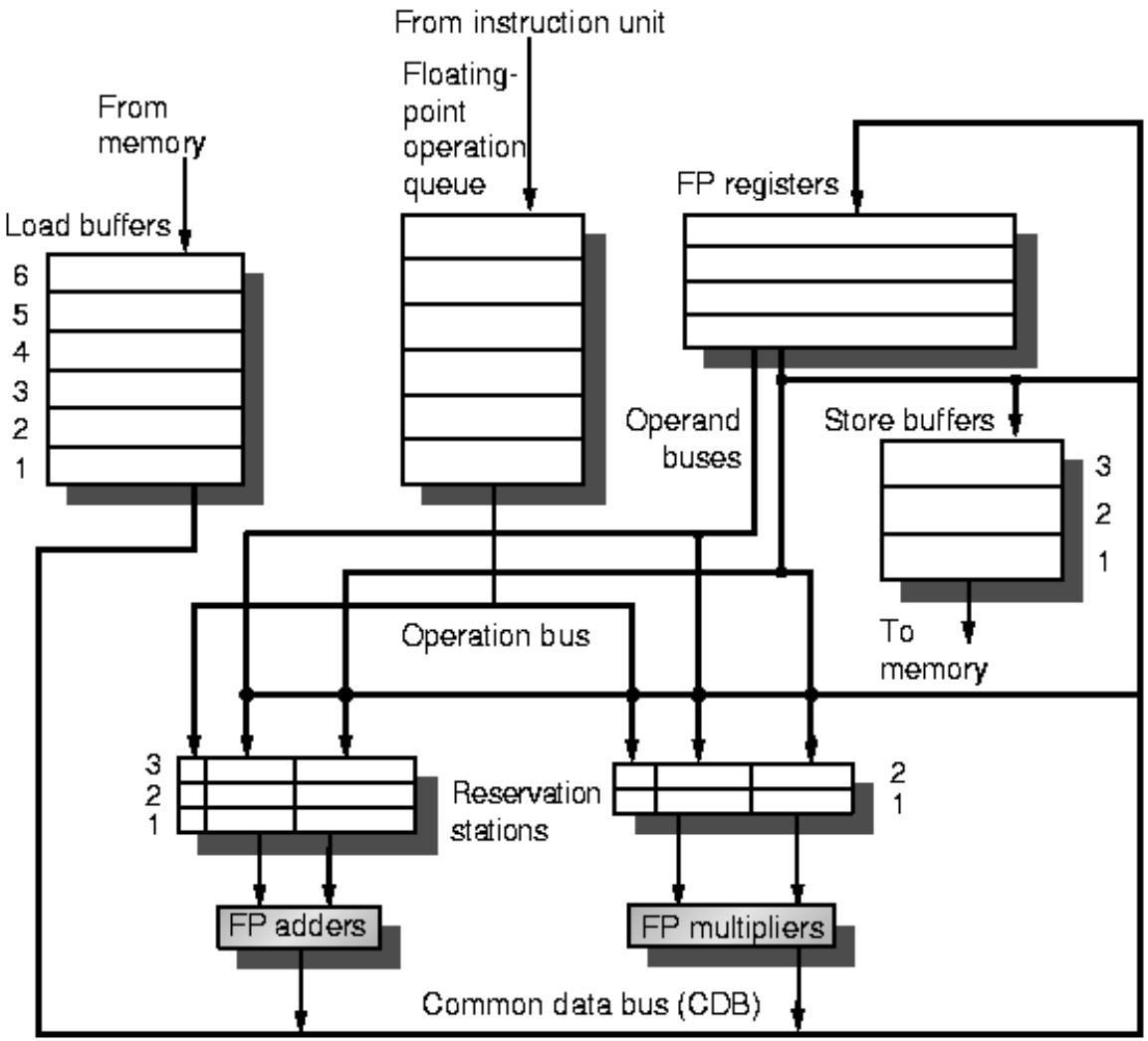

Reservation Station Components

- Tag identifying the RS
- OP = the operation to perform on the component.
- Vj, Vk = Value of the source operands
- Qj,Qk = Pointers to RS that produce Vj,Vk
  Zero value = Source op. is already available in Vj or Vk
- Busy = Indicates RS Busy
- Note: Only one of V-field or Q-field is valid for each operand

Tomasulo Example

Instruction status:

Instruction		*j*	*k*	*Issue*	*Exec Comp*	*Write Result*
LD	F6	34+	R2			
LD	F2	45+	R3			
MULTD	F0	F2	F4			
SUBD	F8	F6	F2			
DIVD	F10	F0	F6			
ADDD	F6	F8	F2			

	Busy	Address
Load1	No	
Load2	No	
Load3	No	

Reservation Stations:

Time	*Name*	*Busy*	*Op*	*S1 Vj*	*S2 Vk*	*RS Qj*	*RS Qk*
	Add1	No					
	Add2	No					
	Add3	No					
	Mult1	No					
	Mult2	No					

Register result status:

Clock		*F0*	*F2*	*F4*	*F6*	*F8*	*F10*	*F12*	...	*F30*
0	*FU*									

Tomasulo Example Cycle 1

Instruction status:

Instruction		*j*	*k*	*Issue*	*Exec Comp*	*Write Result*
LD	F6	34+	R2	1		
LD	F2	45+	R3			
MULTD	F0	F2	F4			
SUBD	F8	F6	F2			
DIVD	F10	F0	F6			
ADDD	F6	F8	F2			

	Busy	*Address*
Load1	Yes	34+R2
Load2	No	
Load3	No	

Reservation Stations:

Time	*Name*	*Busy*	*Op*	*S1 Vj*	*S2 Vk*	*RS Qj*	*RS Qk*
	Add1	No					
	Add2	No					
	Add3	No					
	Mult1	No					
	Mult2	No					

Register result status:

Clock		*F0*	*F2*	*F4*	*F6*	*F8*	*F10*	*F12*	...	*F30*
1	*FU*				Load1					

Tomasulo Example Cycle 2

Instruction status:

Instruction		*j*	*k*	*Issue*	*Exec Comp*	*Write Result*
LD	F6	34+	R2	1		
LD	F2	45+	R3	2		
MULTD	F0	F2	F4			
SUBD	F8	F6	F2			
DIVD	F10	F0	F6			
ADDD	F6	F8	F2			

	Busy	Address
Load1	Yes	34+R2
Load2	Yes	45+R3
Load3	No	

Reservation Stations:

Time	*Name*	*Busy*	*Op*	*S1 Vj*	*S2 Vk*	*RS Qj*	*RS Qk*
	Add1	No					
	Add2	No					
	Add3	No					
	Mult1	No					
	Mult2	No					

Register result status:

Clock		*F0*	*F2*	*F4*	*F6*	*F8*	*F10*	*F12*	...	*F30*
2	*FU*		Load2		Load1					

Tomasulo Example Cycle 2

Instruction status:

Instruction		*j*	*k*	*Issue*	*Exec Comp*	*Write Result*
LD	F6	34+	R2	1		
LD	F2	45+	R3	2		
MULTD	F0	F2	F4			
SUBD	F8	F6	F2			
DIVD	F10	F0	F6			
ADDD	F6	F8	F2			

	Busy	Address
Load1	Yes	34+R2
Load2	Yes	45+R3
Load3	No	

Reservation Stations:

Time	*Name*	*Busy*	*Op*	*S1 Vj*	*S2 Vk*	*RS Qj*	*RS Qk*
	Add1	No					
	Add2	No					
	Add3	No					
	Mult1	No					
	Mult2	No					

Register result status:

Clock		*F0*	*F2*	*F4*	*F6*	*F8*	*F10*	*F12*	...	*F30*
2	*FU*		Load2		Load1					

Note: Unlike 6600, can have multiple loads outstanding

Tomasulo Example Cycle 3

Instruction status:

Instruction		*j*	*k*	*Issue*	*Exec Comp*	*Write Result*
LD	F6	34+	R2	1	3	
LD	F2	45+	R3	2		
MULTD	F0	F2	F4	3		
SUBD	F8	F6	F2			
DIVD	F10	F0	F6			
ADDD	F6	F8	F2			

	Busy	Address
Load1	Yes	34+R2
Load2	Yes	45+R3
Load3	No	

Reservation Stations:

Time	*Name*	*Busy*	*Op*	*S1 Vj*	*S2 Vk*	*RS Qj*	*RS Qk*
	Add1	No					
	Add2	No					
	Add3	No					
	Mult1	Yes	MULTD		R(F4)	Load2	
	Mult2	No					

Register result status:

Clock		*F0*	*F2*	*F4*	*F6*	*F8*	*F10*	*F12*	...	*F30*
3	*FU*	Mult1	Load2		Load1					

Tomasulo Example Cycle 3

Instruction status:

Instruction		j	k	Issue	Exec Comp	Write Result
LD	F6	34+	R2	1	3	
LD	F2	45+	R3	2		
MULTD	F0	F2	F4	3		
SUBD	F8	F6	F2			
DIVD	F10	F0	F6			
ADDD	F6	F8	F2			

	Busy	Address
Load1	Yes	34+R2
Load2	Yes	45+R3
Load3	No	

Note: registers names are removed ("renamed") in Reservation Stations; MULT issued vs. scoreboard
Load1 completing; what is waiting for Load1?

Reservation Stations:

Time	Name	Busy	Op	Vj	Vk	Qj	Qk
	Add1	No					
	Add2	No					
	Add3	No					
	Mult1	Yes	MULTD		R(F4)	Load2	
	Mult2	No					

Register result status:

Clock		F0	F2	F4	F6	F8	F10	F12	...	F30
3	FU	Mult1	Load2		Load1					

Tomasulo Example Cycle 4

Instruction status:

Instruction		*j*	*k*	*Issue*	*Exec Comp*	*Write Result*
LD	F6	34+	R2	1	3	4
LD	F2	45+	R3	2	4	
MULTD	F0	F2	F4	3		
SUBD	F8	F6	F2	4		
DIVD	F10	F0	F6			
ADDD	F6	F8	F2			

	Busy	Address
Load1	No	
Load2	Yes	45+R3
Load3	No	

Reservation Stations:

Time	*Name*	*Busy*	*Op*	*S1 Vj*	*S2 Vk*	*RS Qj*	*RS Qk*
	Add1	Yes	SUBD	M(A1)			Load2
	Add2	No					
	Add3	No					
	Mult1	Yes	MULTD		R(F4)	Load2	
	Mult2	No					

Register result status:

Clock		*F0*	*F2*	*F4*	*F6*	*F8*	*F10*	*F12*	...	*F30*
4	*FU*	Mult1	Load2		M(A1)	Add1				

Tomasulo Example Cycle 4

Instruction status:

Instruction		*j*	*k*	*Issue*	*Exec Comp*	*Write Result*
LD	F6	34+	R2	1	3	4
LD	F2	45+	R3	2	4	
MULTD	F0	F2	F4	3		
SUBD	F8	F6	F2	4		
DIVD	F10	F0	F6			
ADDD	F6	F8	F2			

	Busy	Address
Load1	No	
Load2	Yes	45+R3
Load3	No	

Reservation Stations:

Time	*Name*	*Busy*	*Op*	*S1 Vj*	*S2 Vk*	*RS Qj*	*RS Qk*
	Add1	Yes	SUBD	M(A1)			Load2
	Add2	No					
	Add3	No					
	Mult1	Yes	MULTD		R(F4)	Load2	
	Mult2	No					

Register result status:

Clock		*F0*	*F2*	*F4*	*F6*	*F8*	*F10*	*F12*	...	*F30*
4	*FU*	Mult1	Load2		M(A1)	Add1				

Load2 completing; what is waiting for Load2?

Tomasulo Example Cycle 5

Instruction status:

Instruction		*j*	*k*	*Issue*	*Exec Comp*	*Write Result*
LD	F6	34+	R2	1	3	4
LD	F2	45+	R3	2	4	5
MULTD	F0	F2	F4	3		
SUBD	F8	F6	F2	4		
DIVD	F10	F0	F6	5		
ADDD	F6	F8	F2			

	Busy	Address
Load1	No	
Load2	No	
Load3	No	

Reservation Stations:

Time	*Name*	*Busy*	*Op*	*S1 Vj*	*S2 Vk*	*RS Qj*	*RS Qk*
2	Add1	Yes	SUBD	M(A1)	M(A2)		
	Add2	No					
	Add3	No					
10	Mult1	Yes	MULTD	M(A2)	R(F4)		
	Mult2	Yes	DIVD		M(A1)	Mult1	

Register result status:

Clock		*F0*	*F2*	*F4*	*F6*	*F8*	*F10*	*F12*	...	*F30*
5	*FU*	Mult1	M(A2)		M(A1)	Add1	Mult2			

Tomasulo Example Cycle 6

Instruction status:

Instruction		*j*	*k*	*Issue*	*Exec Comp*	*Write Result*
LD	F6	34+	R2	1	3	4
LD	F2	45+	R3	2	4	5
MULTD	F0	F2	F4	3		
SUBD	F8	F6	F2	4		
DIVD	F10	F0	F6	5		
ADDD	F6	F8	F2	6		

	Busy	Address
Load1	No	
Load2	No	
Load3	No	

Reservation Stations:

Time	*Name*	*Busy*	*Op*	*S1 Vj*	*S2 Vk*	*RS Qj*	*RS Qk*
1	Add1	Yes	SUBD	M(A1)	M(A2)		
	Add2	Yes	ADDD		M(A2)	Add1	
	Add3	No					
9	Mult1	Yes	MULTD	M(A2)	R(F4)		
	Mult2	Yes	DIVD		M(A1)	Mult1	

Register result status:

Clock		*F0*	*F2*	*F4*	*F6*	*F8*	*F10*	*F12*	...	*F30*
6	*FU*	Mult1	M(A2)		Add2	Add1	Mult2			

Issue ADDD here vs. scoreboard

Tomasulo Example Cycle 7

Instruction status:

Instruction		*j*	*k*	*Issue*	*Exec Comp*	*Write Result*
LD	F6	34+	R2	1	3	4
LD	F2	45+	R3	2	4	5
MULTD	F0	F2	F4	3		
SUBD	F8	F6	F2	4	7	
DIVD	F10	F0	F6	5		
ADDD	F6	F8	F2	6		

	Busy	Address
Load1	No	
Load2	No	
Load3	No	

Reservation Stations:

Time	*Name*	*Busy*	*Op*	*S1 Vj*	*S2 Vk*	*RS Qj*	*RS Qk*
0	Add1	Yes	SUBD	M(A1)	M(A2)		
	Add2	Yes	ADDD		M(A2)	Add1	
	Add3	No					
8	Mult1	Yes	MULTD	M(A2)	R(F4)		
	Mult2	Yes	DIVD		M(A1)	Mult1	

Register result status:

Clock		*F0*	*F2*	*F4*	*F6*	*F8*	*F10*	*F12*	...	*F30*
7	*FU*	Mult1	M(A2)		Add2	Add1	Mult2			

Add1 completing; what is waiting for it?

Tomasulo Example Cycle 8

Instruction status:

Instruction		*j*	*k*	*Issue*	*Exec Comp*	*Write Result*
LD	F6	34+	R2	1	3	4
LD	F2	45+	R3	2	4	5
MULTD	F0	F2	F4	3		
SUBD	F8	F6	F2	4	7	8
DIVD	F10	F0	F6	5		
ADDD	F6	F8	F2	6		

	Busy	Address
Load1	No	
Load2	No	
Load3	No	

Reservation Stations:

Time	*Name*	*Busy*	*Op*	*S1 Vj*	*S2 Vk*	*RS Qj*	*RS Qk*
	Add1	No					
2	Add2	Yes	ADDD	(M-M)	M(A2)		
	Add3	No					
7	Mult1	Yes	MULTD	M(A2)	R(F4)		
	Mult2	Yes	DIVD		M(A1)	Mult1	

Register result status:

Clock		*F0*	*F2*	*F4*	*F6*	*F8*	*F10*	*F12*	...	*F30*
8	*FU*	Mult1	M(A2)		Add2	(M-M)	Mult2			

Tomasulo Example Cycle 9

Instruction status:

Instruction		*j*	*k*	*Issue*	*Exec Comp*	*Write Result*
LD	F6	34+	R2	1	3	4
LD	F2	45+	R3	2	4	5
MULTD	F0	F2	F4	3		
SUBD	F8	F6	F2	4	7	8
DIVD	F10	F0	F6	5		
ADDD	F6	F8	F2	6		

	Busy	Address
Load1	No	
Load2	No	
Load3	No	

Reservation Stations:

Time	*Name*	*Busy*	*Op*	*S1 Vj*	*S2 Vk*	*RS Qj*	*RS Qk*
	Add1	No					
1	Add2	Yes	ADDD	(M-M)	M(A2)		
	Add3	No					
6	Mult1	Yes	MULTD	M(A2)	R(F4)		
	Mult2	Yes	DIVD		M(A1)	Mult1	

Register result status:

Clock		*F0*	*F2*	*F4*	*F6*	*F8*	*F10*	*F12*	...	*F30*
9	*FU*	Mult1	M(A2)		Add2	(M-M)	Mult2			

Tomasulo Example Cycle 10

Instruction status:

Instruction		*j*	*k*	*Issue*	*Exec Comp*	*Write Result*
LD	F6	34+	R2	1	3	4
LD	F2	45+	R3	2	4	5
MULTD	F0	F2	F4	3		
SUBD	F8	F6	F2	4	7	8
DIVD	F10	F0	F6	5		
ADDD	F6	F8	F2	6	10	

	Busy	Address
Load1	No	
Load2	No	
Load3	No	

Reservation Stations:

Time	*Name*	*Busy*	*Op*	*S1 Vj*	*S2 Vk*	*RS Qj*	*RS Qk*
	Add1	No					
0	Add2	Yes	ADDD	(M-M)	M(A2)		
	Add3	No					
5	Mult1	Yes	MULTD	M(A2)	R(F4)		
	Mult2	Yes	DIVD		M(A1)	Mult1	

Register result status:

Clock		*F0*	*F2*	*F4*	*F6*	*F8*	*F10*	*F12*	...	*F30*
10	*FU*	Mult1	M(A2)		Add2	(M-M)	Mult2			

Add2 completing; what is waiting for it?

Tomasulo Example Cycle 11

Instruction status:

Instruction		*j*	*k*	*Issue*	*Exec Comp*	*Write Result*
LD	F6	34+	R2	1	3	4
LD	F2	45+	R3	2	4	5
MULTD	F0	F2	F4	3		
SUBD	F8	F6	F2	4	7	8
DIVD	F10	F0	F6	5		
ADDD	F6	F8	F2	6	10	11

	Busy	Address
Load1	No	
Load2	No	
Load3	No	

Reservation Stations:

Time	*Name*	*Busy*	*Op*	*S1 Vj*	*S2 Vk*	*RS Qj*	*RS Qk*
	Add1	No					
	Add2	No					
	Add3	No					
4	Mult1	Yes	MULTD	M(A2)	R(F4)		
	Mult2	Yes	DIVD		M(A1)	Mult1	

Register result status:

Clock		*F0*	*F2*	*F4*	*F6*	*F8*	*F10*	*F12*	...	*F30*
11	*FU*	Mult1	M(A2)		(M-M+M)	(M-M)	Mult2			

Tomasulo Example Cycle 12

Instruction status:

Instruction		*j*	*k*	*Issue*	*Exec Comp*	*Write Result*
LD	F6	34+	R2	1	3	4
LD	F2	45+	R3	2	4	5
MULTD	F0	F2	F4	3		
SUBD	F8	F6	F2	4	7	8
DIVD	F10	F0	F6	5		
ADDD	F6	F8	F2	6	10	11

	Busy	Address
Load1	No	
Load2	No	
Load3	No	

Reservation Stations:

Time	*Name*	*Busy*	*Op*	*S1 Vj*	*S2 Vk*	*RS Qj*	*RS Qk*
	Add1	No					
	Add2	No					
	Add3	No					
3	Mult1	Yes	MULTD	M(A2)	R(F4)		
	Mult2	Yes	DIVD		M(A1)	Mult1	

Register result status:

Clock		*F0*	*F2*	*F4*	*F6*	*F8*	*F10*	*F12*	...	*F30*
12	*FU*	Mult1	M(A2)		(M-M+M)	(M-M)	Mult2			

Tomasulo Example Cycle 13

Instruction status:

Instruction		*j*	*k*	*Issue*	*Exec Comp*	*Write Result*
LD	F6	34+	R2	1	3	4
LD	F2	45+	R3	2	4	5
MULTD	F0	F2	F4	3		
SUBD	F8	F6	F2	4	7	8
DIVD	F10	F0	F6	5		
ADDD	F6	F8	F2	6	10	11

	Busy	Address
Load1	No	
Load2	No	
Load3	No	

Reservation Stations:

Time	*Name*	*Busy*	*Op*	*S1 Vj*	*S2 Vk*	*RS Qj*	*RS Qk*
	Add1	No					
	Add2	No					
	Add3	No					
2	Mult1	Yes	MULTD	M(A2)	R(F4)		
	Mult2	Yes	DIVD		M(A1)	Mult1	

Register result status:

Clock		*F0*	*F2*	*F4*	*F6*	*F8*	*F10*	*F12*	...	*F30*
13	*FU*	Mult1	M(A2)		(M-M+M)	(M-M)	Mult2			

Tomasulo Example Cycle 14

Instruction status:

Instruction		*j*	*k*	*Issue*	*Exec Comp*	*Write Result*
LD	F6	34+	R2	1	3	4
LD	F2	45+	R3	2	4	5
MULTD	F0	F2	F4	3		
SUBD	F8	F6	F2	4	7	8
DIVD	F10	F0	F6	5		
ADDD	F6	F8	F2	6	10	11

	Busy	Address
Load1	No	
Load2	No	
Load3	No	

Reservation Stations:

Time	*Name*	*Busy*	*Op*	*S1 Vj*	*S2 Vk*	*RS Qj*	*RS Qk*
	Add1	No					
	Add2	No					
	Add3	No					
1	Mult1	Yes	MULTD	M(A2)	R(F4)		
	Mult2	Yes	DIVD		M(A1)	Mult1	

Register result status:

Clock		*F0*	*F2*	*F4*	*F6*	*F8*	*F10*	*F12*	...	*F30*
14	*FU*	Mult1	M(A2)		(M-M+M)	(M-M)	Mult2			

Tomasulo Example Cycle 15

Instruction status:

Instruction		*j*	*k*	*Issue*	*Exec Comp*	*Write Result*
LD	F6	34+	R2	1	3	4
LD	F2	45+	R3	2	4	5
MULTD	F0	F2	F4	3	15	
SUBD	F8	F6	F2	4	7	8
DIVD	F10	F0	F6	5		
ADDD	F6	F8	F2	6	10	11

	Busy	Address
Load1	No	
Load2	No	
Load3	No	

Reservation Stations:

Time	*Name*	*Busy*	*Op*	*S1 Vj*	*S2 Vk*	*RS Qj*	*RS Qk*
	Add1	No					
	Add2	No					
	Add3	No					
0	Mult1	Yes	MULTD	M(A2)	R(F4)		
	Mult2	Yes	DIVD		M(A1)	Mult1	

Register result status:

Clock		*F0*	*F2*	*F4*	*F6*	*F8*	*F10*	*F12*	...	*F30*
15	*FU*	Mult1	M(A2)		(M-M+M)	(M-M)	Mult2			

Tomasulo Example Cycle 16

Instruction status:

Instruction		*j*	*k*	*Issue*	*Exec Comp*	*Write Result*
LD	F6	34+	R2	1	3	4
LD	F2	45+	R3	2	4	5
MULTD	F0	F2	F4	3	15	16
SUBD	F8	F6	F2	4	7	8
DIVD	F10	F0	F6	5		
ADDD	F6	F8	F2	6	10	11

	Busy	Address
Load1	No	
Load2	No	
Load3	No	

Reservation Stations:

Time	*Name*	*Busy*	*Op*	*S1 Vj*	*S2 Vk*	*RS Qj*	*RS Qk*
	Add1	No					
	Add2	No					
	Add3	No					
	Mult1	No					
40	Mult2	Yes	DIVD	M*F4	M(A1)		

Register result status:

Clock		*F0*	*F2*	*F4*	*F6*	*F8*	*F10*	*F12*	...	*F30*
16	*FU*	M*F4	M(A2)		(M-M+M)	(M-M)	Mult2			

Faster than light computation (skip a couple of cycles)

Tomasulo Example Cycle 55

Instruction status:

Instruction		*j*	*k*	*Issue*	*Exec Comp*	*Write Result*
LD	F6	34+	R2	1	3	4
LD	F2	45+	R3	2	4	5
MULTD	F0	F2	F4	3	15	16
SUBD	F8	F6	F2	4	7	8
DIVD	F10	F0	F6	5		
ADDD	F6	F8	F2	6	10	11

	Busy	Address
Load1	No	
Load2	No	
Load3	No	

Reservation Stations:

Time	*Name*	*Busy*	*Op*	*S1 Vj*	*S2 Vk*	*RS Qj*	*RS Qk*
	Add1	No					
	Add2	No					
	Add3	No					
	Mult1	No					
1	Mult2	Yes	DIVD	M*F4	M(A1)		

Register result status:

Clock		*F0*	*F2*	*F4*	*F6*	*F8*	*F10*	*F12*	...	*F30*
55	*FU*	M*F4	M(A2)		(M-M+M)	(M-M)	Mult2			

Tomasulo Example Cycle 55

Instruction status:

Instruction		*j*	*k*	*Issue*	*Exec Comp*	*Write Result*
LD	F6	34+	R2	1	3	4
LD	F2	45+	R3	2	4	5
MULTD	F0	F2	F4	3	15	16
SUBD	F8	F6	F2	4	7	8
DIVD	F10	F0	F6	5	56	
ADDD	F6	F8	F2	6	10	11

	Busy	Address
Load1	No	
Load2	No	
Load3	No	

Reservation Stations:

Time	*Name*	*Busy*	*Op*	*S1 Vj*	*S2 Vk*	*RS Qj*	*RS Qk*
	Add1	No					
	Add2	No					
	Add3	No					
	Mult1	No					
0	Mult2	Yes	DIVD	M*F4	M(A1)		

Register result status:

Clock		*F0*	*F2*	*F4*	*F6*	*F8*	*F10*	*F12*	...	*F30*
56	*FU*	M*F4	M(A2)		(M-M+M)	(M-M)	Mult2			

Mult2 is completing; what is waiting for it?

Tomasulo Example Cycle 57

Instruction status:

Instruction		*j*	*k*	*Issue*	*Exec Comp*	*Write Result*
LD	F6	34+	R2	1	3	4
LD	F2	45+	R3	2	4	5
MULTD	F0	F2	F4	3	15	16
SUBD	F8	F6	F2	4	7	8
DIVD	F10	F0	F6	5	56	57
ADDD	F6	F8	F2	6	10	11

	Busy	Address
Load1	No	
Load2	No	
Load3	No	

Reservation Stations:

Time	*Name*	*Busy*	*Op*	*S1 Vj*	*S2 Vk*	*RS Qj*	*RS Qk*
	Add1	No					
	Add2	No					
	Add3	No					
	Mult1	No					
	Mult2	Yes	DIVD	M*F4	M(A1)		

Register result status:

Clock		*F0*	*F2*	*F4*	*F6*	*F8*	*F10*	*F12*	...	*F30*
56	*FU*	M*F4	M(A2)		(M-M+M)	(M-M)	Result			

Tomasulo Example Cycle 57

Instruction status:

Instruction		*j*	*k*	*Issue*	*Exec Comp*	*Write Result*
LD	F6	34+	R2	1	3	4
LD	F2	45+	R3	2	4	5
MULTD	F0	F2	F4	3	15	16
SUBD	F8	F6	F2	4	7	8
DIVD	F10	F0	F6	5	56	57
ADDD	F6	F8	F2	6	10	11

	Busy	Address
Load1	No	
Load2	No	
Load3	No	

Reservation Stations:

Time	*Name*	*Busy*	*Op*	*S1 Vj*	*S2 Vk*	*RS Qj*	*RS Qk*
	Add1	No					
	Add2	No					
	Add3	No					
	Mult1	No					
	Mult2	Yes	DIVD	M*F4	M(A1)		

Register result status:

Clock		*F0*	*F2*	*F4*	*F6*	*F8*	*F10*	*F12*	...	*F30*
56	*FU*	M*F4	M(A2)		(M-M+M)	(M-M)	Result			

Tomasulo Example Cycle 57

Instruction status:

Instruction		*j*	*k*	*Issue*	*Exec Comp*	*Write Result*
LD	F6	34+	R2	1	3	4
LD	F2	45+	R3	2	4	5
MULTD	F0	F2	F4	3	15	16
SUBD	F8	F6	F2	4	7	8
DIVD	F10	F0	F6	5	56	57
ADDD	F6	F8	F2	6	10	11

	Busy	Address
Load1	No	
Load2	No	
Load3	No	

Reservation Stations:

Time	*Name*	*Busy*	*Op*	*S1 Vj*	*S2 Vk*	*RS Qj*	*RS Qk*
	Add1	No					
	Add2	No					
	Add3	No					
	Mult1	No					
	Mult2	Yes	DIVD	M*F4	M(A1)		

Register result status:

Clock		*F0*	*F2*	*F4*	*F6*	*F8*	*F10*	*F12*	...	*F30*
56	*FU*	M*F4	M(A2)		(M-M+M)	(M-M)	Result			

Tomasulo Example Cycle 57

Instruction status:

Instruction		j	k	Issue	Exec Comp	Write Result
LD	F6	34+	R2	1	3	4
LD	F2	45+	R3	2	4	5
MULTD	F0	F2	F4	3	15	16
SUBD	F8	F6	F2	4	7	8
DIVD	F10	F0	F6	5	56	57
ADDD	F6	F8	F2	6	10	11

	Busy	Address
Load1	No	
Load2	No	
Load3	No	

Reservation Stations:

Time	Name	Busy	Op	S1 Vj	S2 Vk	RS Qj	RS Qk
	Add1	No					
	Add2	No					
	Add3	No					
	Mult1	No					
	Mult2	Yes	DIVD	M*F4	M(A1)		

Register result status:

Clock		F0	F2	F4	F6	F8	F10	F12	...	F30
56	FU	M*F4	M(A2)		(M-M+M)	(M-M)	Result			

Tomasulo Example Cycle 57

Instruction status:

Instruction		j	k	Issue	Exec Comp	Write Result
LD	F6	34+	R2	1	3	4
LD	F2	45+	R3	2	4	5
MULTD	F0	F2	F4	3	15	16
SUBD	F8	F6	F2	4	7	8
DIVD	F10	F0	F6	5	56	57
ADDD	F6	F8	F2	6	10	11

	Busy	Address
Load1	No	
Load2	No	
Load3	No	

Reservation Stations:

Time	Name	Busy	Op	S1 Vj	S2 Vk	RS Qj	RS Qk
	Add1	No					
	Add2	No					
	Add3	No					
	Mult1	No					
	Mult2	Yes	DIVD	M*F4	M(A1)		

Register result status:

Clock		F0	F2	F4	F6	F8	F10	F12	...	F30
56	FU	M*F4	M(A2)		(M-M+M)	(M-M)	Result			

Once again: In-order issue, out-of-order execution and completion.

Tomasulo (IBM) versus Scoreboard (CDC)

- Issue window size=14
- No issue on structural hazards
- WAR, WAW avoided with renaming
- Broadcast results from FU
- Control distributed on RS
- Allows loop unrolling in HW

- Issue window size=5
- No issue on structural hazards
- Stall the completion for WAW and WAR hazards
- Results written back on registers.
- Control centralized through the Scoreboard.

Tomasulo Algorithm vs. Scoreboard

- Control & buffers distributed with Function Units (FU) vs. centralized in scoreboard;
  - FU buffers called "reservation stations"; have pending operands

Tomasulo Algorithm vs. Scoreboard

- Control & buffers distributed with Function Units (FU) vs. centralized in scoreboard;
  - FU buffers called "reservation stations"; have pending operands
- Registers in instructions replaced by values or pointers to reservation stations(RS); called register renaming;
  - avoids WAR, WAW hazards
  - More reservation stations than registers, so can do optimizations compilers can't

Tomasulo Algorithm vs. Scoreboard

- Control & buffers distributed with Function Units (FU) vs. centralized in scoreboard;
  - FU buffers called "reservation stations"; have pending operands
- Registers in instructions replaced by values or pointers to reservation stations(RS); called register renaming;
  - avoids WAR, WAW hazards
  - More reservation stations than registers, so can do optimizations compilers can't
- Results to FU from RS, not through registers, over Common Data Bus that broadcasts results to all FUs

Tomasulo Algorithm vs. Scoreboard

- Control & buffers distributed with Function Units (FU) vs. centralized in scoreboard;
  - FU buffers called "reservation stations"; have pending operands
- Registers in instructions replaced by values or pointers to reservation stations(RS); called register renaming;
  - avoids WAR, WAW hazards
  - More reservation stations than registers, so can do optimizations compilers can't
- Results to FU from RS, not through registers, over Common Data Bus that broadcasts results to all FUs
- Load and Stores treated as FUs with RSs as well

Tomasulo Algorithm vs. Scoreboard

- Control & buffers distributed with Function Units (FU) vs. centralized in scoreboard;
  - FU buffers called "reservation stations"; have pending operands
- Registers in instructions replaced by values or pointers to reservation stations(RS); called register renaming;
  - avoids WAR, WAW hazards
  - More reservation stations than registers, so can do optimizations compilers can't
- Results to FU from RS, not through registers, over Common Data Bus that broadcasts results to all FUs
- Load and Stores treated as FUs with RSs as well
- Integer instructions can go past branches, allowing FP ops beyond basic block in FP queue

Compare to Scoreboard Cycle 62

Instruction status:

Instruction		*j*	*k*	*Issue*	*Read Oper*	*Exec Comp*	*Write Result*	*Issue*	*Exec Comp*	*Write Result*
LD	F6	34+	R2	1	2	3	4	1	3	4
LD	F2	45+	R3	5	6	7	8	2	4	5
MULTD	F0	F2	F4	6	9	19	20	3	15	16
SUBD	F8	F6	F2	7	9	11	12	4	7	8
DIVD	F10	F0	F6	8	21	61	62	5	56	57
ADDD	F6	F8	F2	13	14	16	22	6	10	11

Compare to Scoreboard Cycle 62

Instruction status:

Instruction		*j*	*k*	*Issue*	*Read Oper*	*Exec Comp*	*Write Result*	*Issue*	*Exec Comp*	*Write Result*
LD	F6	34+	R2	1	2	3	4	1	3	4
LD	F2	45+	R3	5	6	7	8	2	4	5
MULTD	F0	F2	F4	6	9	19	20	3	15	16
SUBD	F8	F6	F2	7	9	11	12	4	7	8
DIVD	F10	F0	F6	8	21	61	62	5	56	57
ADDD	F6	F8	F2	13	14	16	22	6	10	11

Why take longer on scoreboard/6600?

- **Structural Hazards**
- **Lack of forwarding**

Tomasulo Drawbacks

- Complexity
  - Large amount of hardware
  - delays of 360/91, MIPS 10000, IBM 620?
- Many associative stores (CDB) at high speed
- Performance limited by Common Data Bus
  - Multiple CDBs => more FU logic for parallel assoc stores

Summary

- HW exploiting ILP
  - Works when can't know dependence at compile time.
  - Code for one machine runs well on another
- Reservations stations: renaming to larger set of registers + buffering source operands
  - Prevents registers as bottleneck
  - Avoids WAR, WAW hazards of Scoreboard
  - Allows loop unrolling in HW
- Not limited to basic blocks (integer units gets ahead, beyond branches)
- Lasting Contributions
  - Dynamic scheduling
  - Register renaming
  - Load/store disambiguation

Advanced Computer Architectures
(High Performance Processors and Systems)

Dynamic Scheduling: Tomasulo Algorithm

Politecnico di Milano

v1