THIS DOCUMENT AND THE DATA DISCLOSED HEREIN OR HEREWITH IS THE PROPERTY OF ALTIUM LIMITED AND MAY BE FREELY DISTRIBUTED IN WHOLE. NO RIGHTS ARE RESERVED OR EXPRESS OR IMPLIED WARANTEE GIVEN.

REVISION	DESCRIPTION	DATE	APPROVED

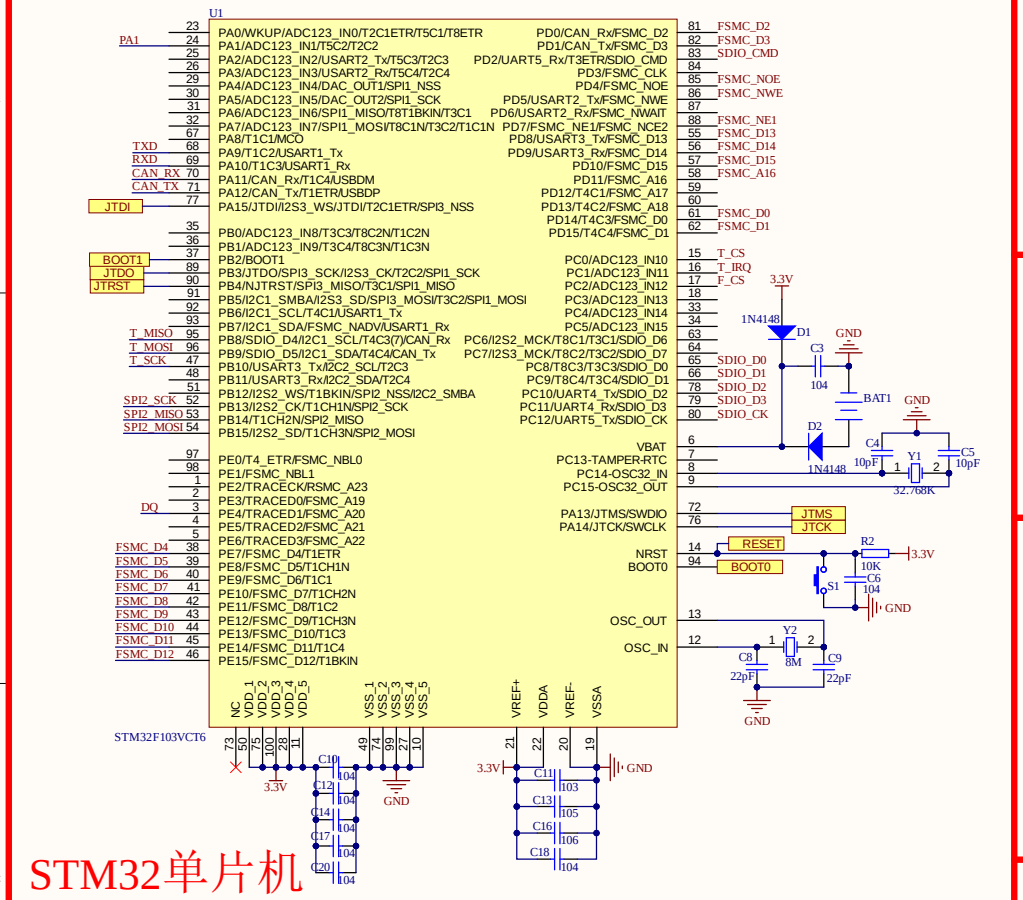

STM32单片机

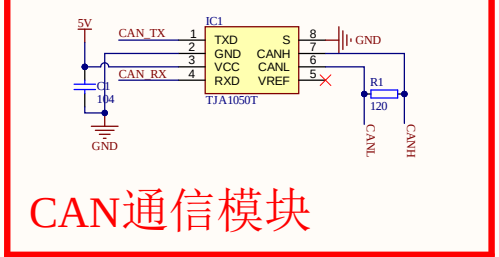

CAN通信模块

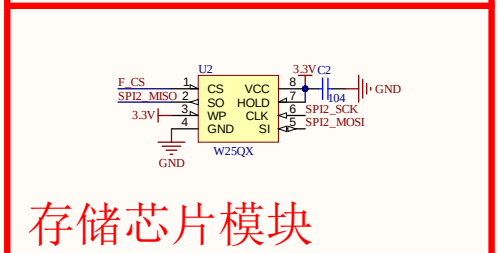

存储芯片模块

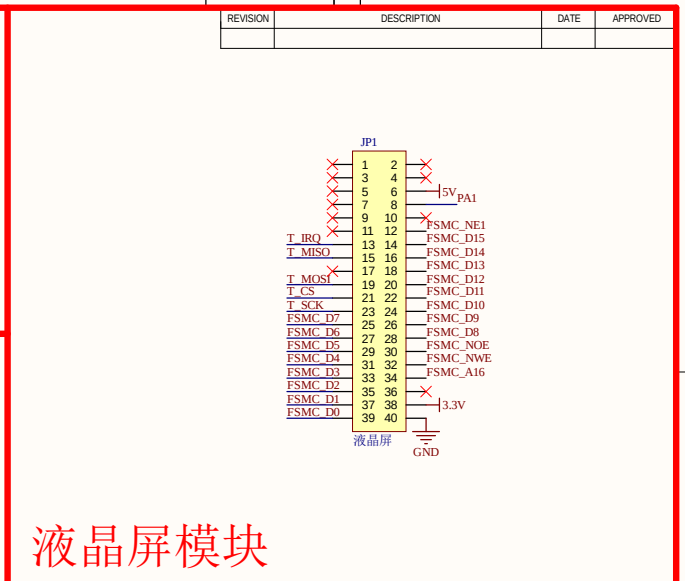

液晶屏模块

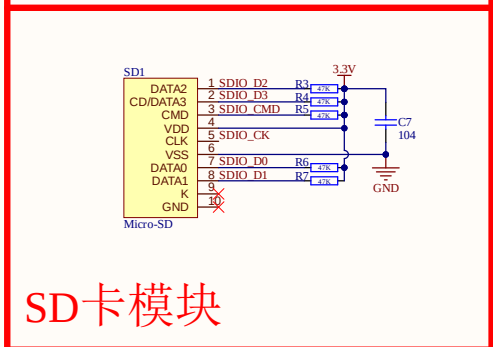

SD卡模块

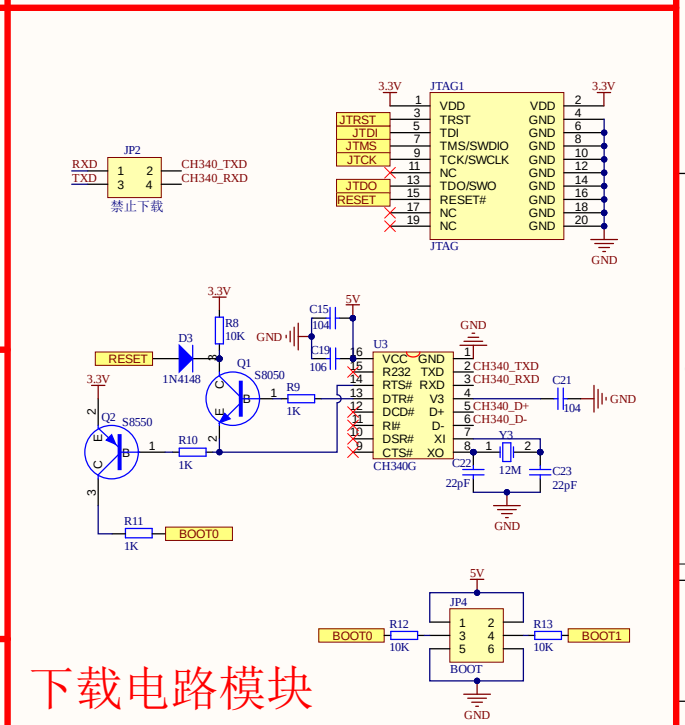

下载电路模块

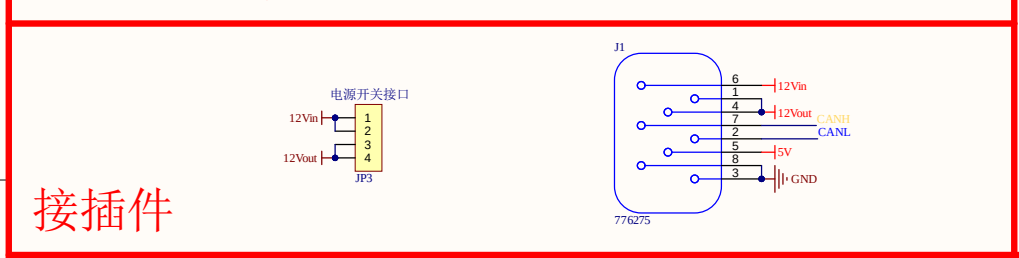

接插件

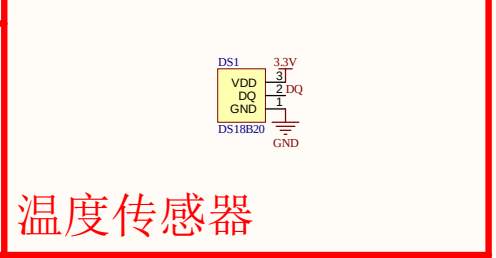

温度传感器

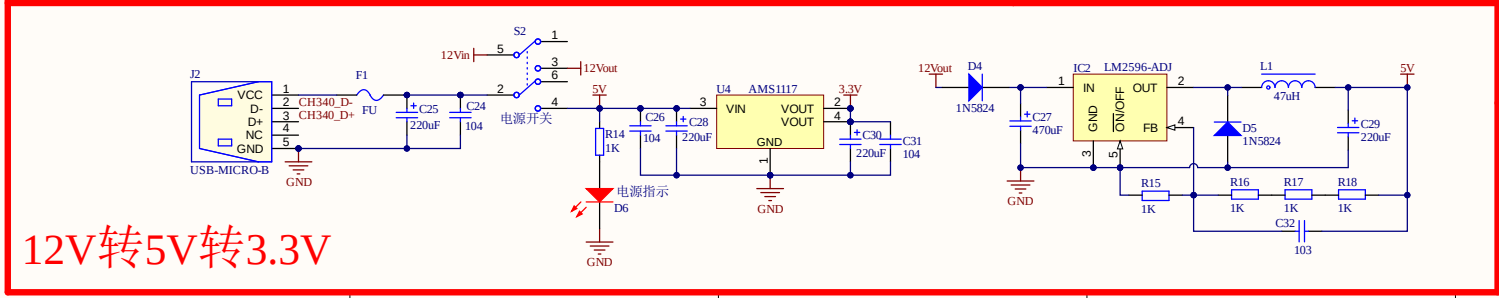

12V转5V转3.3V

APPROVALS	DATE
ENG: 向鸿	
DSN: 向鸿	
CHK: 王峰	
REFERENCE DOCUMENTS	
BOM:	
ASSY DWG:	
FAB DWG:	
PCB DWG:	

PROJECT

Altium

PROJECT REVISION: Not in version control | DOCUMENT REVISION: Not in version control | DESIGN ITEM: Not in version control

TITLE 仪表

SIZE	CAGE CODE	DWG NO.	REV
A3			

SCALE: | FILE NAME 仪表改.SchDoc | SHEET 1 OF 1