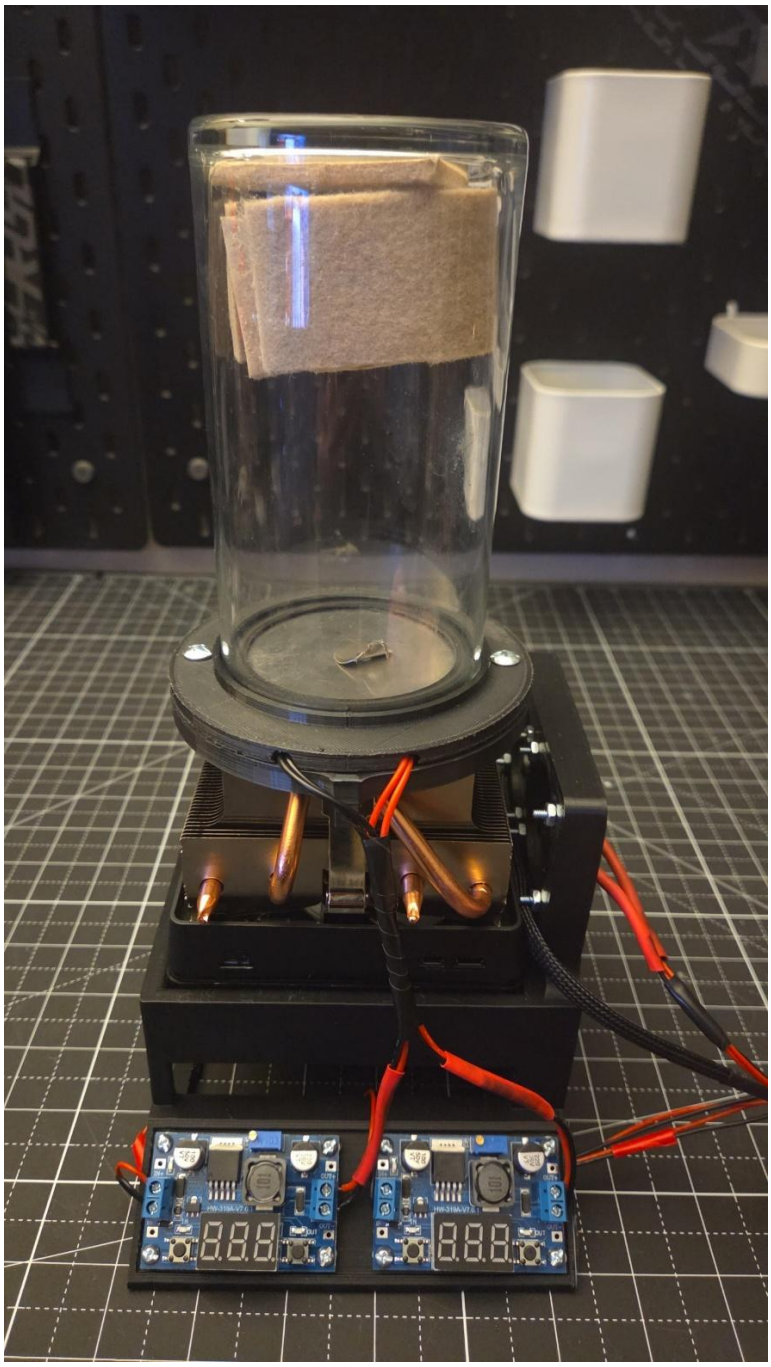

Cloud Chamber Project

Design by: Therin Hack

Spring 2026

Goals:

- Design a small Cloud Chamber using a vertical CPU cooler that can be used to show the radioactive decay of various isotopes using super cooled isopropyl alcohol.
- Build a reliable project that I can use to add to my Engineering portfolio that surrounds my interests in Design and Nuclear engineering.

Basic Design Concepts:

- Consists of a glass viewing chamber with an aluminum plate at the bottom being cooled by two 12v Peltier coolers, while using a CPU cooler to dissipate excess heat out of the system to create a precise controlled environment down to around -25° Celsius. When achieved, saturating a sponge with isopropyl alcohol will cause it to sublimate into the encloser that when cooled down to temp, will cause the iso to create a vapor cloud to show the alpha decay of simple radioactive isotopes.

Possible Problems:

- Improper heat dissipation causes aluminum plate to not cool to proper temperature.
- Not properly "airtight" inside the viewing chamber, causing isopropyl to leak.
- Overdrawn power causing the Peltier's to explode.

Project Process:

I started out the design of this project on paper, writing down the plan I had for this project with a basic parts list, simple sketch and the concept of the project I wanted to build (Figure 1). I then went to the Internet to look up some basic concepts and design choices from other engineers that had also built their own cloud chamber concept, where I found that the parts list for a basic cloud chamber was fairly simple. The parts required for this project consisted of a CPU cooler from a PC, two 12V Peltier ceramic cooling plates, a cylindrical glass jar, and Isopropyl alcohol.

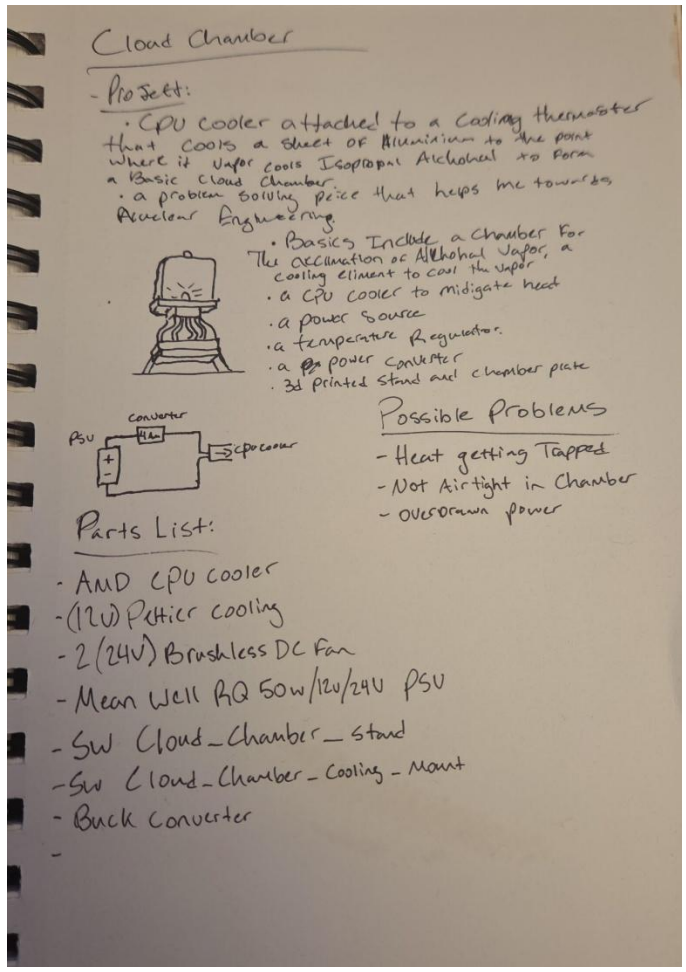

Figure 1 – Cloud Chamber initial concept

From there I went to SolidWorks to start the design process, since I already owned the AMD CPU cooler, I was able to get all of the measurements for the stand for my cooler to sit in, to allow proper airflow through the system. I also had to design a way for the glass viewing lid to sit comfortably on the top of the CPU. After a few redesigns and tolerance fitting, I was able to test out the cloud chamber.

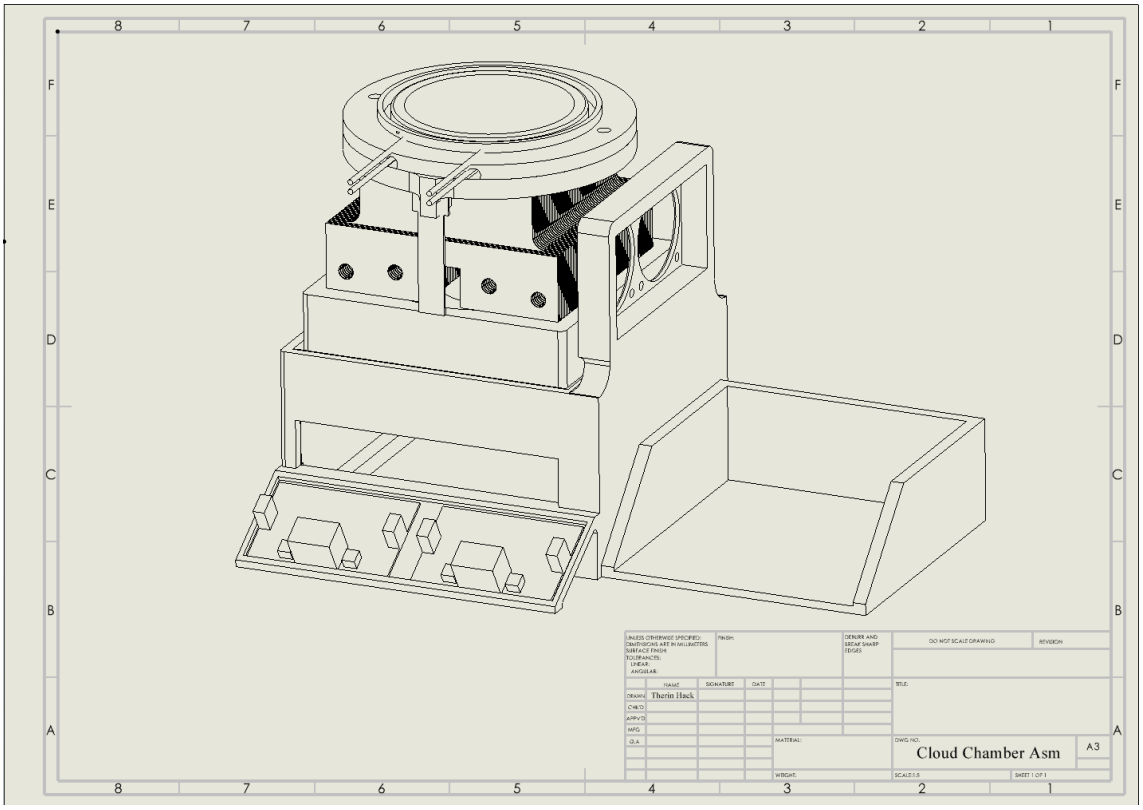
UNLESS OTHERWISE SPECIFIED:
DIMENSIONS ARE IN MILLIMETERS
SURFACE FINISH
TOLERANCES:
LINEAR:
ANGULAR:
FINISH:
DEBURR AND BREAK SHARP EDGES
DO NOT SCALE DRAWING
REVISION
NAME
SIGNATURE
DATE
DRAWN
Therin Hack
CHK'D
APPV'D
MFG
Q.A
TITLE:
MATERIAL:
DWG NO.
Cloud Chamber Asm
A3
WEIGHT:
SCALE:1:5
SHEET 1 OF 1

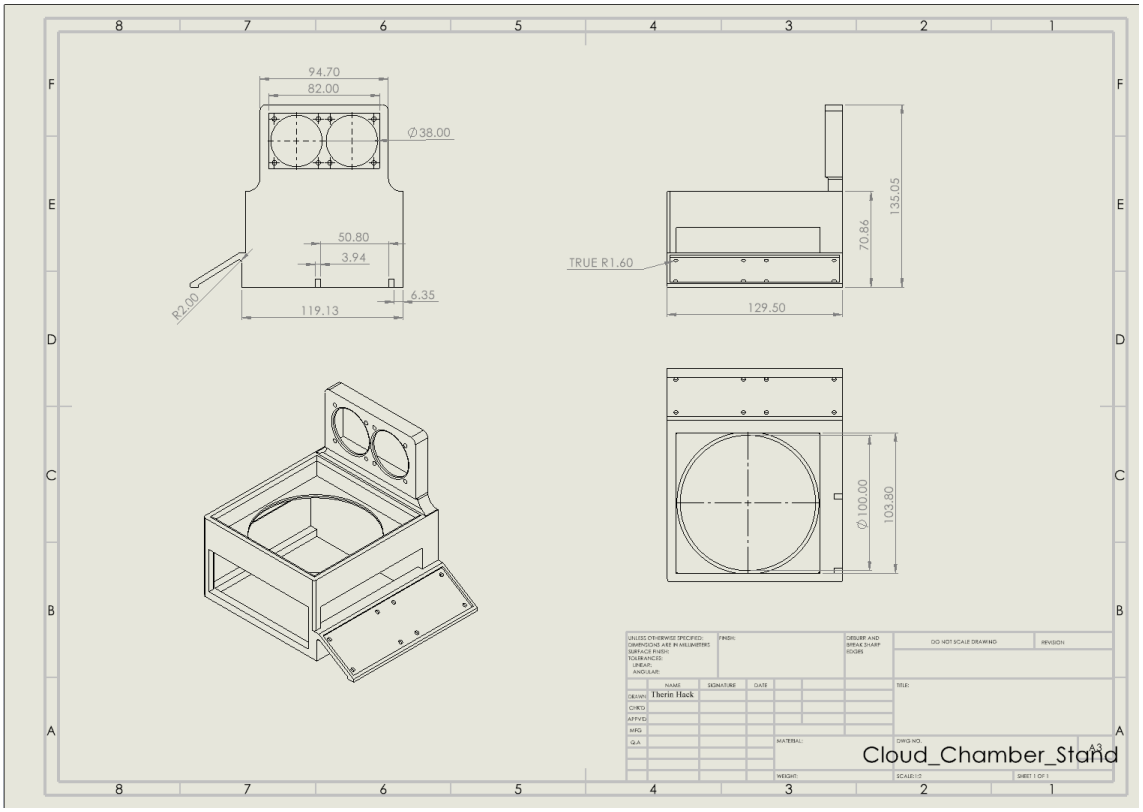
94.70
82.00
Ø38.00
50.80
3.94
6.35
119.13
R2.00
TRUE R1.60
135.05
70.86
129.50
Ø100.00
103.80
UNLESS OTHERWISE SPECIFIED:
DIMENSIONS ARE IN MILLIMETERS
SURFACE FINISH
TOLERANCES:
LINEAR:
ANGULAR:
FINISH:
DEBURR AND BREAK SHARP EDGES
DO NOT SCALE DRAWING
REVISION
NAME
SIGNATURE
DATE
DRAWN
Therin Hack
CHK'D
APPV'D
MFG
Q.A
TITLE:
MATERIAL:
DWG NO.
Cloud_Chamber_Stand
A3
WEIGHT:
SCALE:1:2
SHEET 1 OF 1

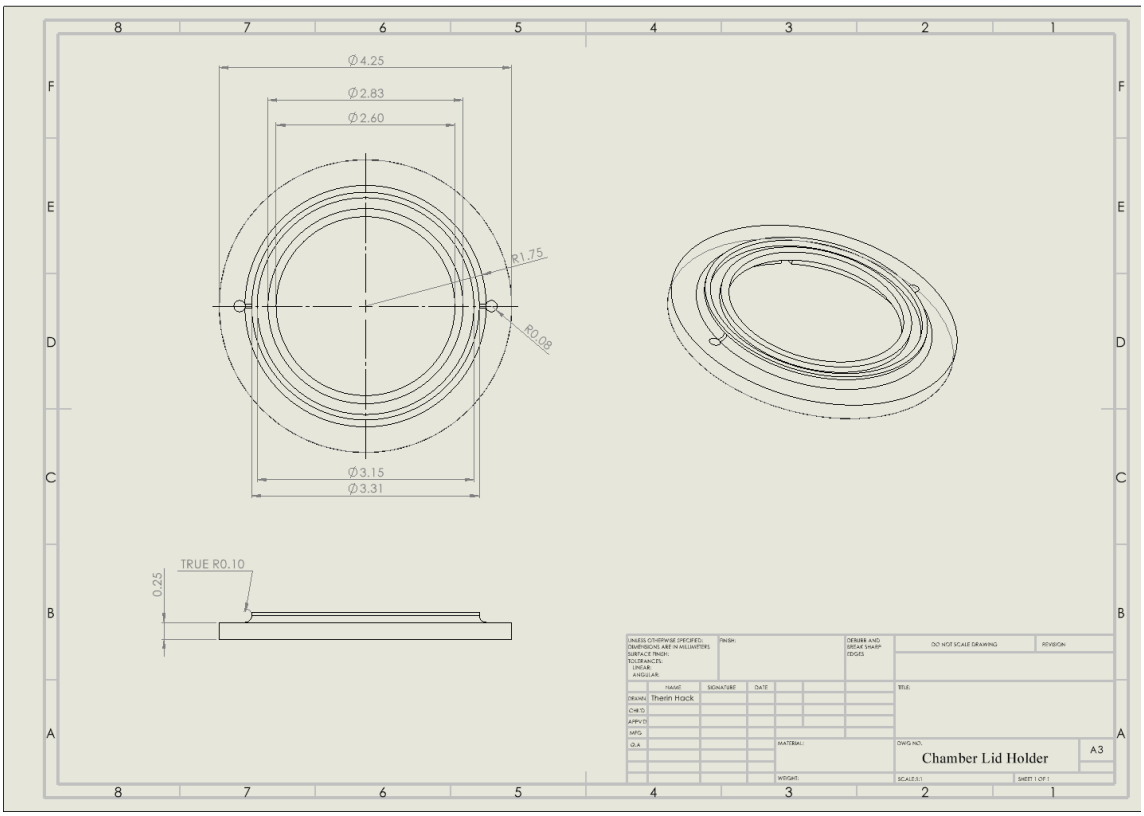
Ø4.25
Ø2.83
Ø2.60
R1.75
R0.08
Ø3.15
Ø3.31
TRUE R0.10
0.25
UNLESS OTHERWISE SPECIFIED:
DIMENSIONS ARE IN MILLIMETERS
SURFACE FINISH:
TOLERANCES:
LINEAR
ANGULAR:
FINISH:
DEBURR AND BREAK SHARP EDGES
DO NOT SCALE DRAWING
REVISION:
NAME
SIGNATURE
DATE
DRAWN
Therin Hack
CHK'D
APPV'D
MFG
Q.A
TITLE:
MATERIAL:
WEIGHT:
DWG NO.
Chamber Lid Holder
A3
SCALE:1:1
SHEET 1 OF 1

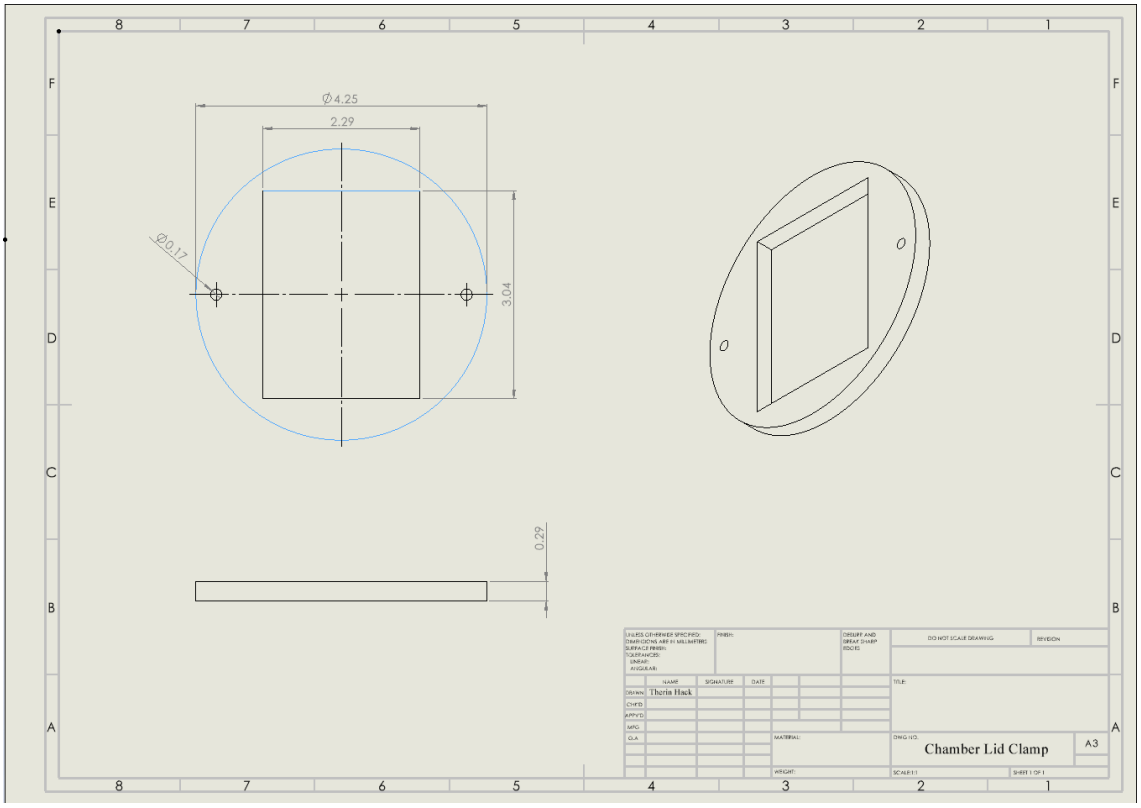
Ø4.25
2.29
Ø0.17
3.04
0.29
UNLESS OTHERWISE SPECIFIED:
DIMENSIONS ARE IN MILLIMETERS
SURFACE FINISH:
TOLERANCES:
LINEAR
ANGULAR:
FINISH:
DEBURR AND BREAK SHARP EDGES
DO NOT SCALE DRAWING
REVISION
NAME
SIGNATURE
DATE
DRAWN
Therin Hack
CHK'D
APPV'D
MFG
Q.A
TITLE:
MATERIAL:
WEIGHT:
DWG NO.
Chamber Lid Clamp
A3
SCALE:1:1
SHEET 1 OF 1

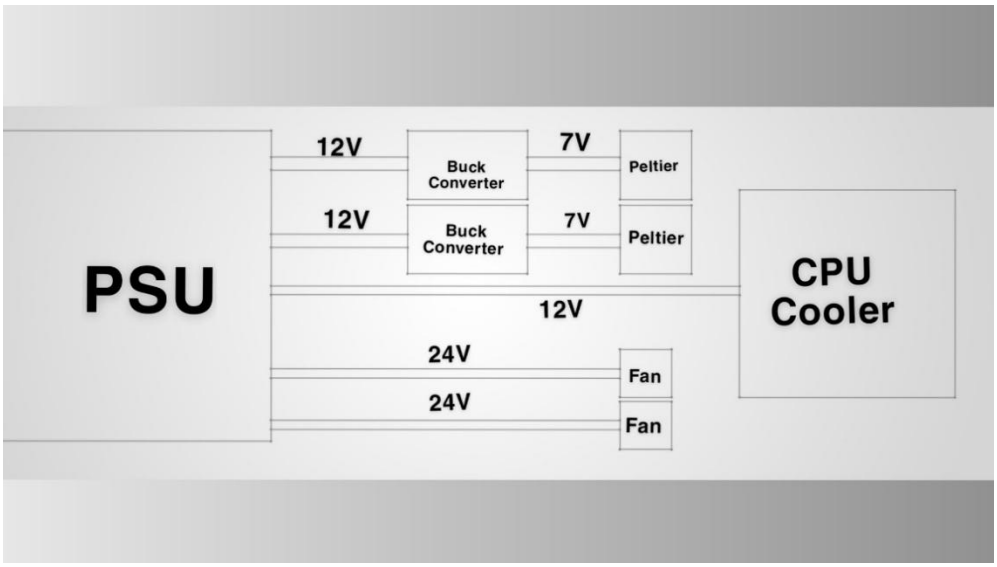

Testing and Failure:

My initial test run of my cloud chamber produced very helpful results and presented a few issues as well. One of the biggest issues being that I didn't get any visual representation of Beta decay off the isotope that I was using. This told me that that the issue was either: I didn't have enough voltage running through the Peltier's, meaning that they weren't able to get cold enough, or that the chamber wasn't airtight enough and was allowing the alcohol to escape faster than it could cool. I decided to go back to the drawing board at this point and decided to put more research into how much power draw and amperage the Peltier would need to reach sufficient temperatures. What I found is that I needed to nearly double the number of AMPs that the system could reliably handle, so that the Peltier's could have a higher draw at 12V. Testing after I upgraded the PSU and the Buck Converters brought the system reliably down to around zero degrees Celsius, which was a major improvement, yet still to warm for the alcohol vapor to condense down far enough so that the particles would show.

To Be Continued:

Some Problems that I have encountered in this project that I intend to address and resolve in the MRK 2 version of this project are going to be: Reaching -30 degrees Celsius, Getting a stronger isotope, Improving airflow and cooling of the Peltier units, and redesigning the Stand to better fit the new PSU and Buck Converters. Though this current version of the project ended in it not working, that does not mean that this project was a failure in my eyes, just an opportunity to improve and perfect. So, I will be coming back to this project once I can throw more hours of research into it.