Tarea 0

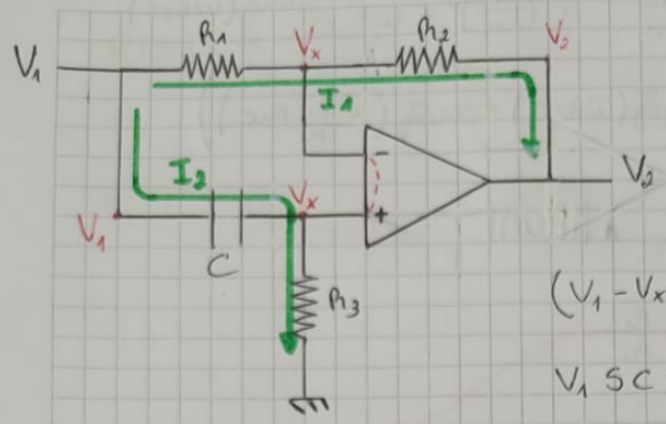

$$I_1 = \frac{V_1 - V_x}{R_1} = \frac{V_x - V_2}{R_2}$$

$$I_2 = \frac{V_1 - V_x}{\frac{1}{SC}} = \frac{V_x}{R_3}$$

$$(V_1 - V_x)SC = \frac{V_x}{R_3}$$

$$V_1 SC = V_x\left(\frac{1}{R_3} + SC\right) = V_x\left(\frac{SCR_3 + 1}{R_3}\right)$$

$$V_1 = \frac{SCR_3 + 1}{SCR_3} V_x \Rightarrow V_x = \frac{SCR_3}{SCR_3 + 1} V_1$$

$$\frac{V_1}{R_1} = \left(\frac{1}{R_1} + \frac{1}{R_2}\right) V_x - \frac{V_2}{R_2}$$

$$\frac{V_1}{R_1} = \left(\frac{R_1 + R_2}{R_1 R_2}\right)\left(\frac{SCR_3}{SCR_3 + 1}\right) V_1 - \frac{V_2}{R_2}$$

$$\frac{V_1}{R_1} - \left(\frac{SCR_3(R_1 + R_2)}{R_1 R_2 (SCR_3 + 1)}\right) V_1 = -\frac{V_2}{R_2}$$

$$\left(\frac{R_2(SCR_3 + 1)}{R_1 R_2 (SCR_3 + 1)} - \frac{SCR_3(R_1 + R_2)}{R_1 R_2 (SCR_3 + 1)}\right) V_1 = -\frac{V_2}{R_2}$$

$$\left(\frac{\cancel{SCR_2R_3} + R_2 - SCR_1R_3 - \cancel{SCR_2R_3}}{R_1 R_2 (SCR_3 + 1)}\right) V_1 = -\frac{V_2}{R_2}$$

$$\left(-\frac{(SCR_1R_3 - R_2)}{R_1 R_2 (SCR_3 + 1)}\right) V_1 = -\frac{V_2}{R_2} \Rightarrow H(S) = \frac{V_2}{V_1} = \left(-\frac{(SCR_1R_3 - R_2)}{R_1 \cancel{R_2}(SCR_3 + 1)} (-\cancel{R_2})\right)$$

$$H(S) = \frac{SCR_1R_3 - R_2}{SCR_1R_3 + R_1} = \frac{SCR_1R_3 - R_2}{CR_1R_3\left(S + \frac{1}{R_3C}\right)} = \frac{S - \frac{R_2}{R_1R_3C}}{S + \frac{1}{R_3C}}$$

$$\boxed{H(S) = \frac{S - \frac{R_2}{R_1R_3C}}{S + \frac{1}{R_3C}}}$$

$$H(\omega) = H(s)\Big|_{s=j\omega} = \frac{j\omega - \frac{R_2}{R_1R_3C}}{j\omega + \frac{1}{R_3C}} = \frac{\sqrt{\left(\frac{R_2}{R_1R_3C}\right)^2 + \omega^2}\; e^{j\,\mathrm{arctg}\left(\omega \frac{R_1R_3C}{R_2}\right)}}{\sqrt{\left(\frac{1}{R_3C}\right)^2 + \omega^2}\; e^{j\,\mathrm{arctg}(\omega R_3C)}}$$

$$H(\omega) = \sqrt{\frac{\left(\frac{R_2}{R_1R_3C}\right)^2 + \omega^2}{\left(\frac{1}{R_3C}\right)^2 + \omega^2}}\; e^{j\left(\mathrm{arctg}(\omega R_3C) - \mathrm{arctg}\left(\omega \frac{R_1}{R_2} R_3C\right)\right)}$$

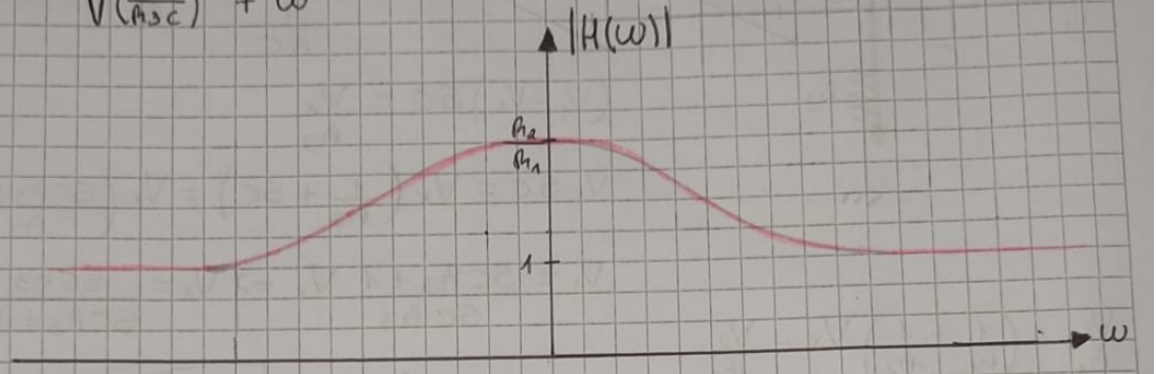

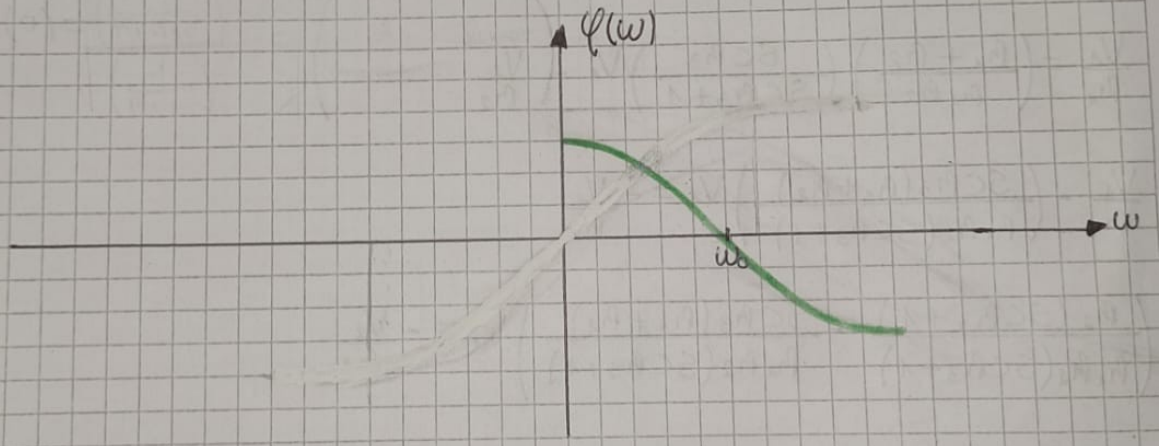

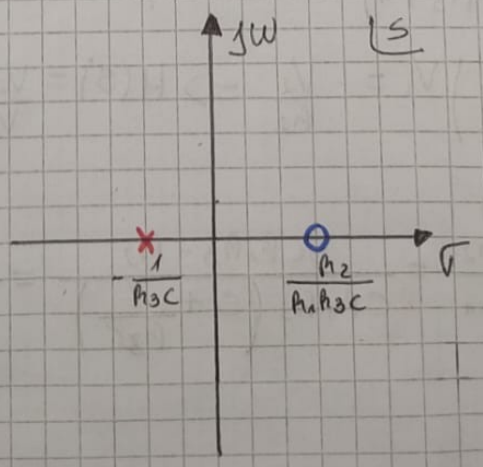

zero

polo.