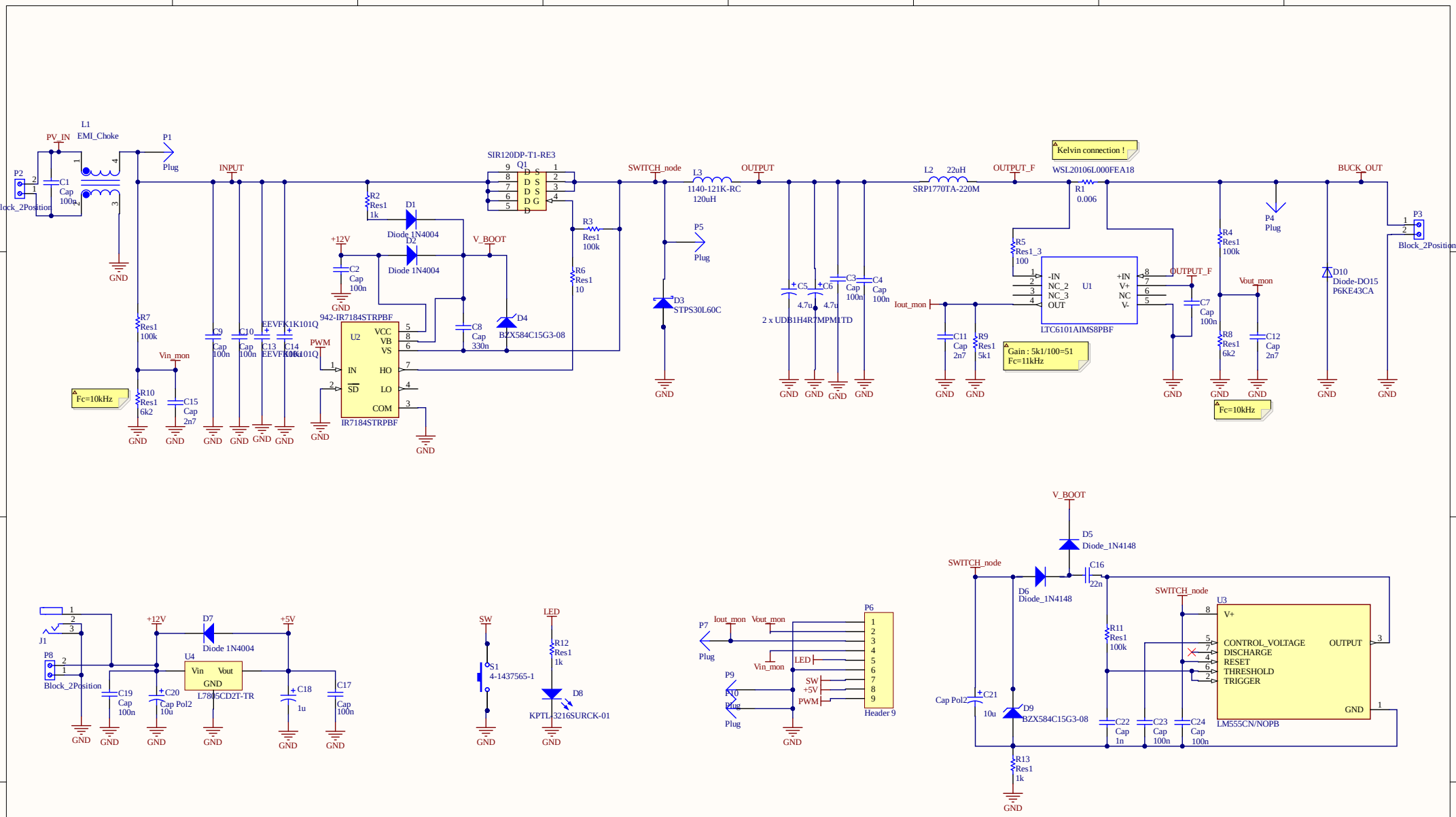

Title		
Size A3	Number	Revision
Date: 12/04/2020		Sheet of
File: D:\Documents\..\Main.SchDoc		Drawn By: