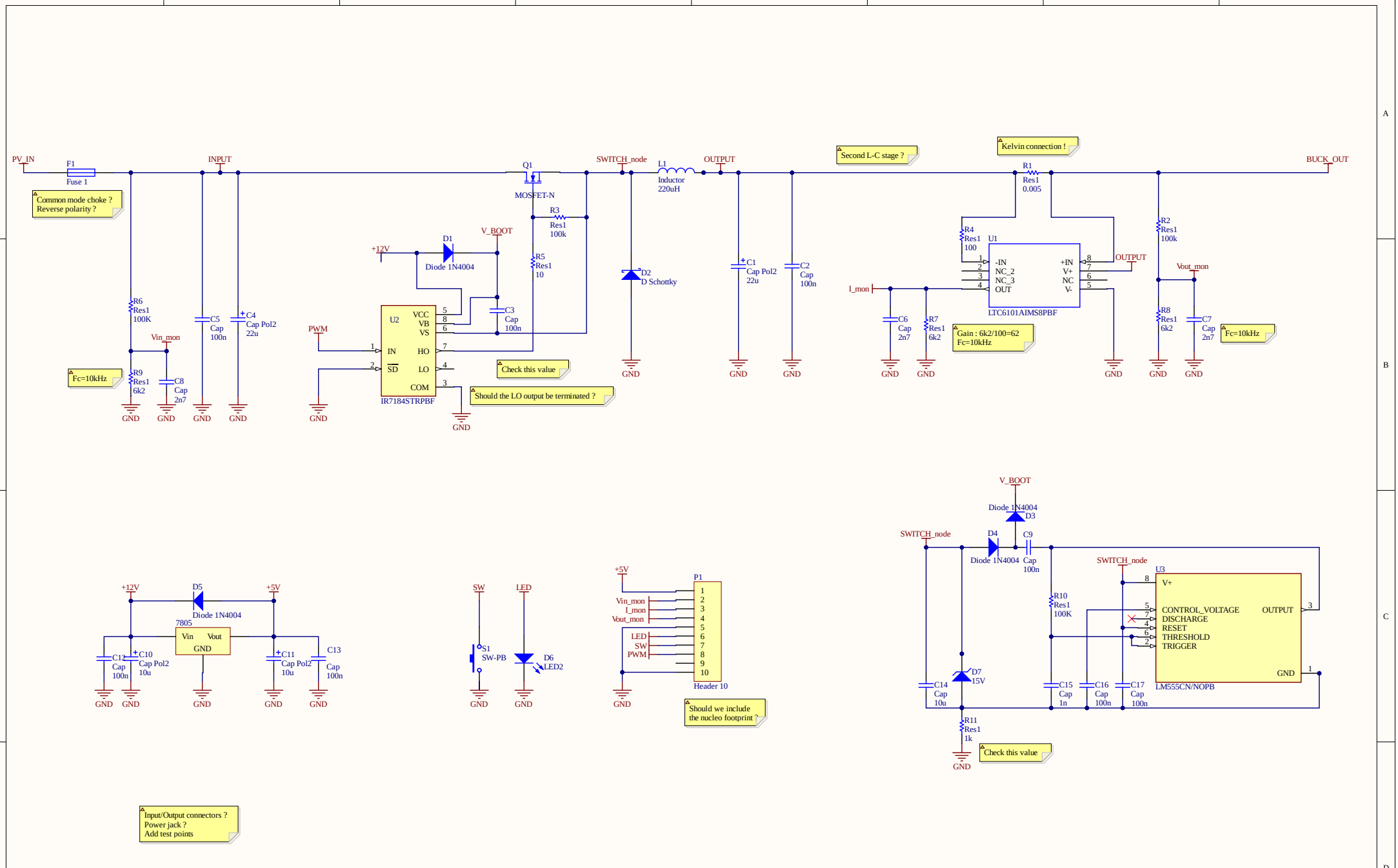

Input/Output connectors ?
Power jack ?
Add test points

Title		
Size A3	Number	Revision
Date: 11/01/2020		Sheet of
File: D:\Documents\..\Main.SchDoc		Drawn By: