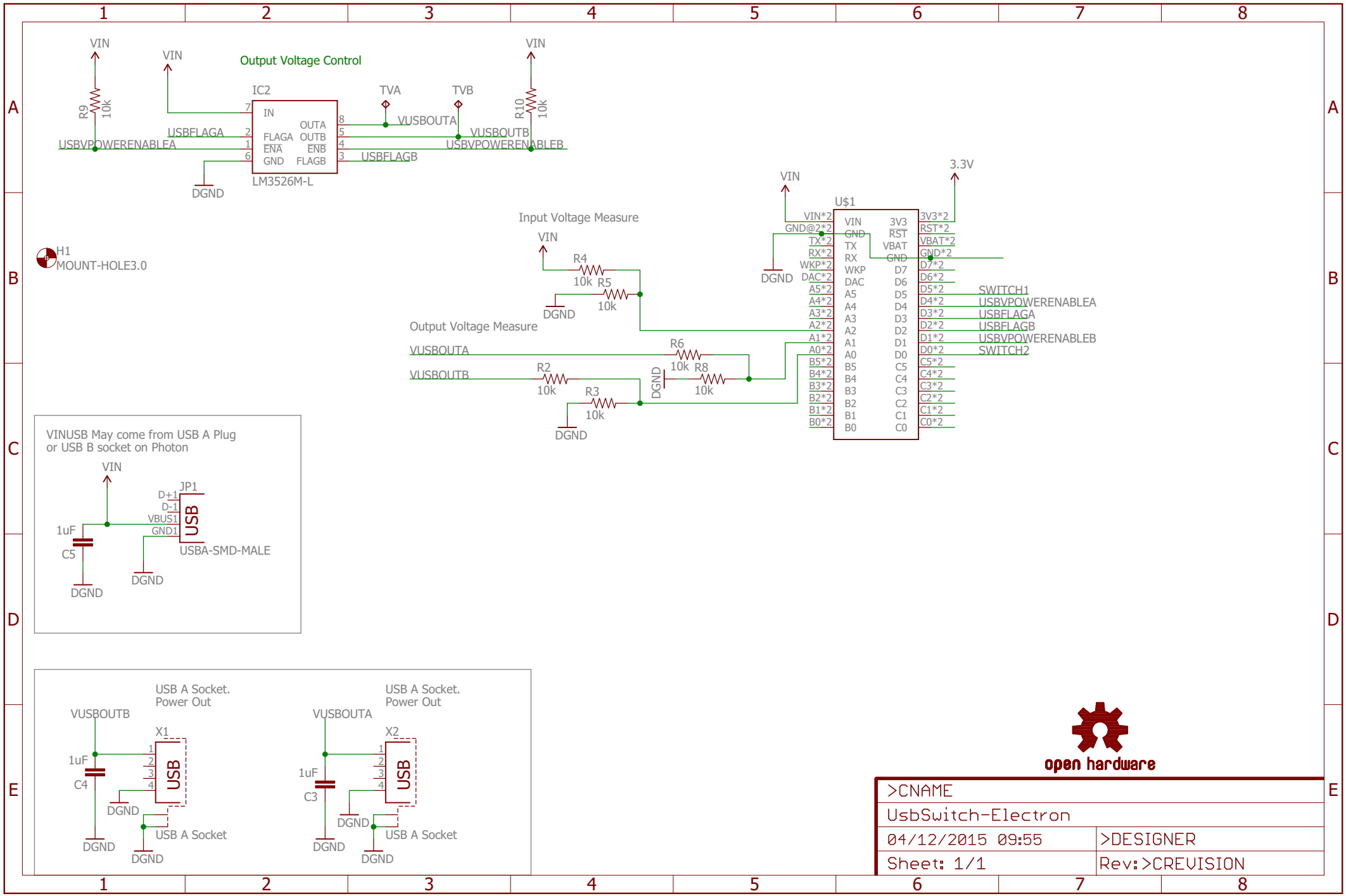
Output Voltage Control
IC2
LM3526M-L
IN
OUTA
FLAGA
OUTB
ENA
ENB
GND
FLAGB
VIN
R9
10k
R10
10k
TVA
TVB
VUSBOUTA
VUSBOUTB
USBFLAGA
USBFLAGB
USBVPOWERENABLEA
USBVPOWERENABLEB
DGND
H1
MOUNT-HOLE3.0
Input Voltage Measure
R4
10k
R5
10k
Output Voltage Measure
R6
10k
R8
10k
R2
10k
R3
10k
U$1
3.3V
SWITCH1
SWITCH2
VINUSB May come from USB A Plug
or USB B socket on Photon
JP1
USB
USBA-SMD-MALE
1uF
C5
USB A Socket.
Power Out
X1
X2
C4
C3
USB A Socket
open hardware
>CNAME
UsbSwitch-Electron
04/12/2015 09:55
>DESIGNER
Sheet: 1/1
Rev:>CREVISION