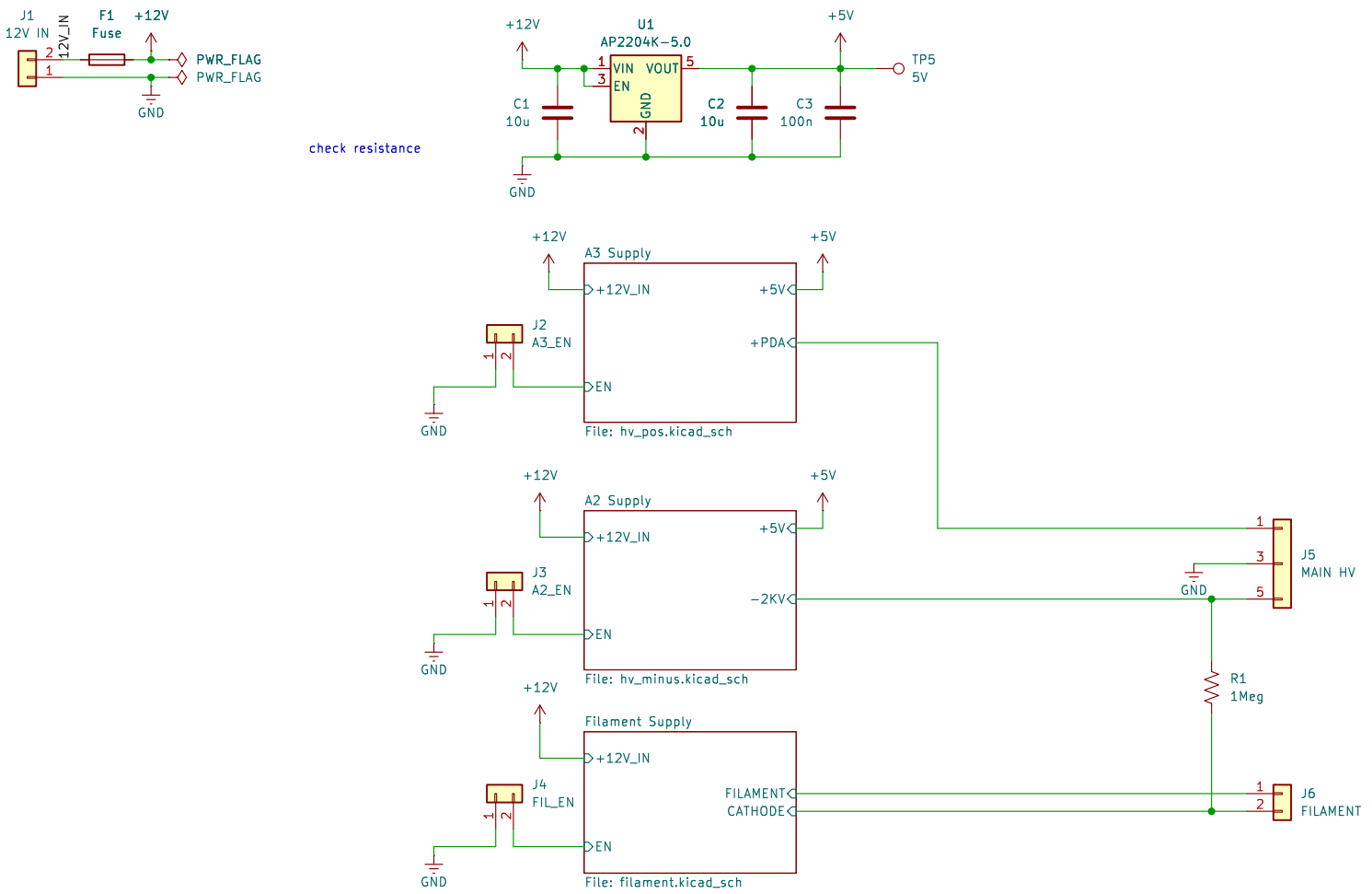

Sheet: /
File: main_supply_4_VM.kicad_sch

Title:

Size: A4	Date:	**Rev:**
KiCad E.D.A. 9.0.0		Id: 1/6

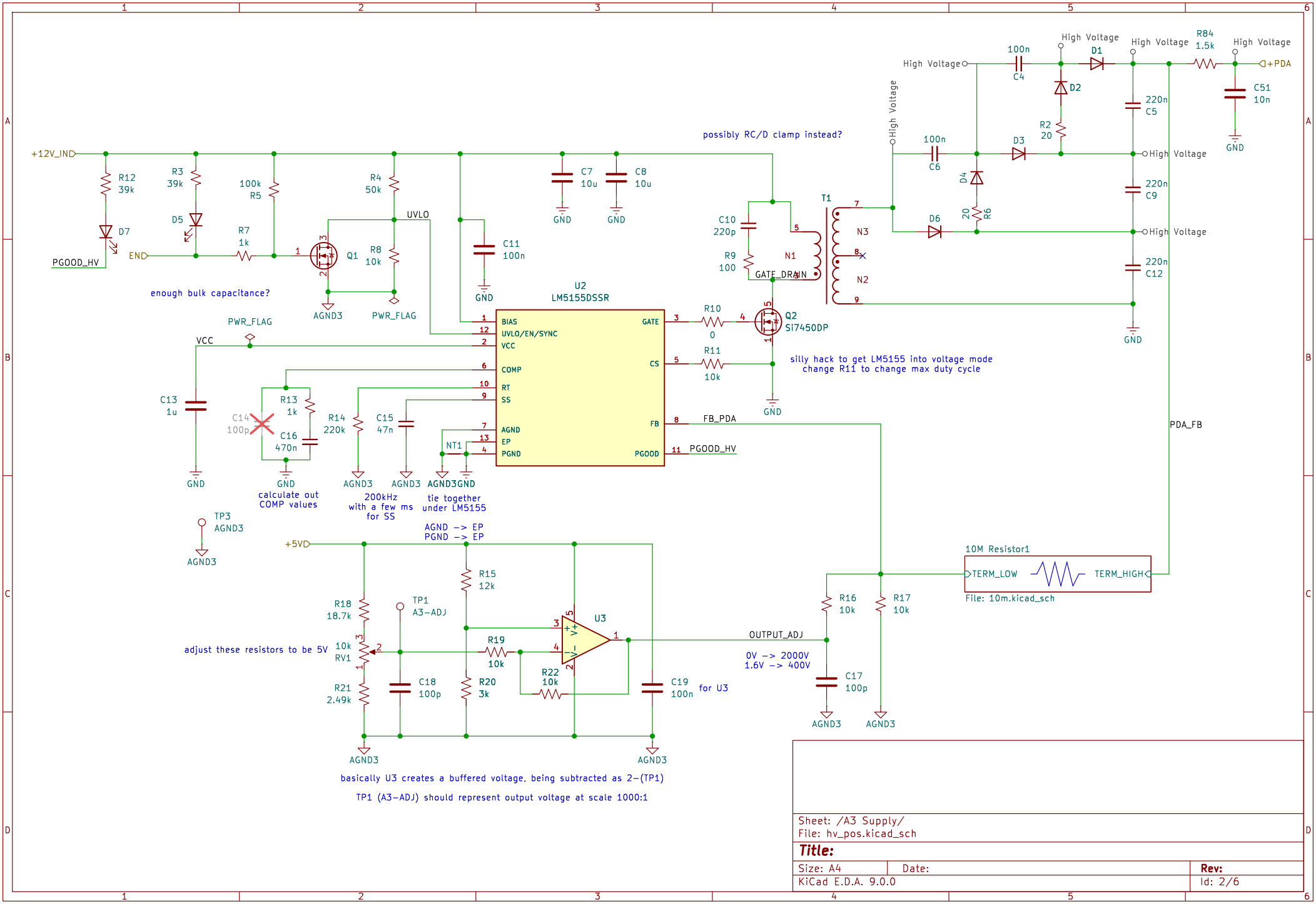

basically U3 creates a buffered voltage, being subtracted as 2-(TP1)

TP1 (A3-ADJ) should represent output voltage at scale 1000:1

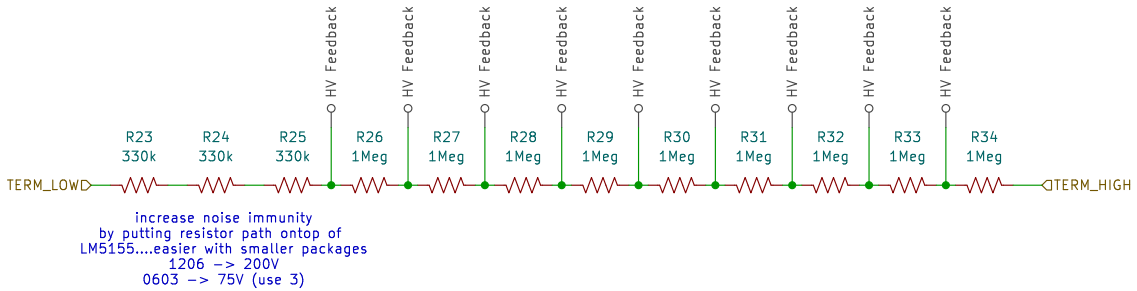

Sheet: /A3 Supply/10M Resistor1/
File: 10m.kicad_sch

Title:

Size: A4	Date:	**Rev:**
KiCad E.D.A. 9.0.0		Id: 3/6

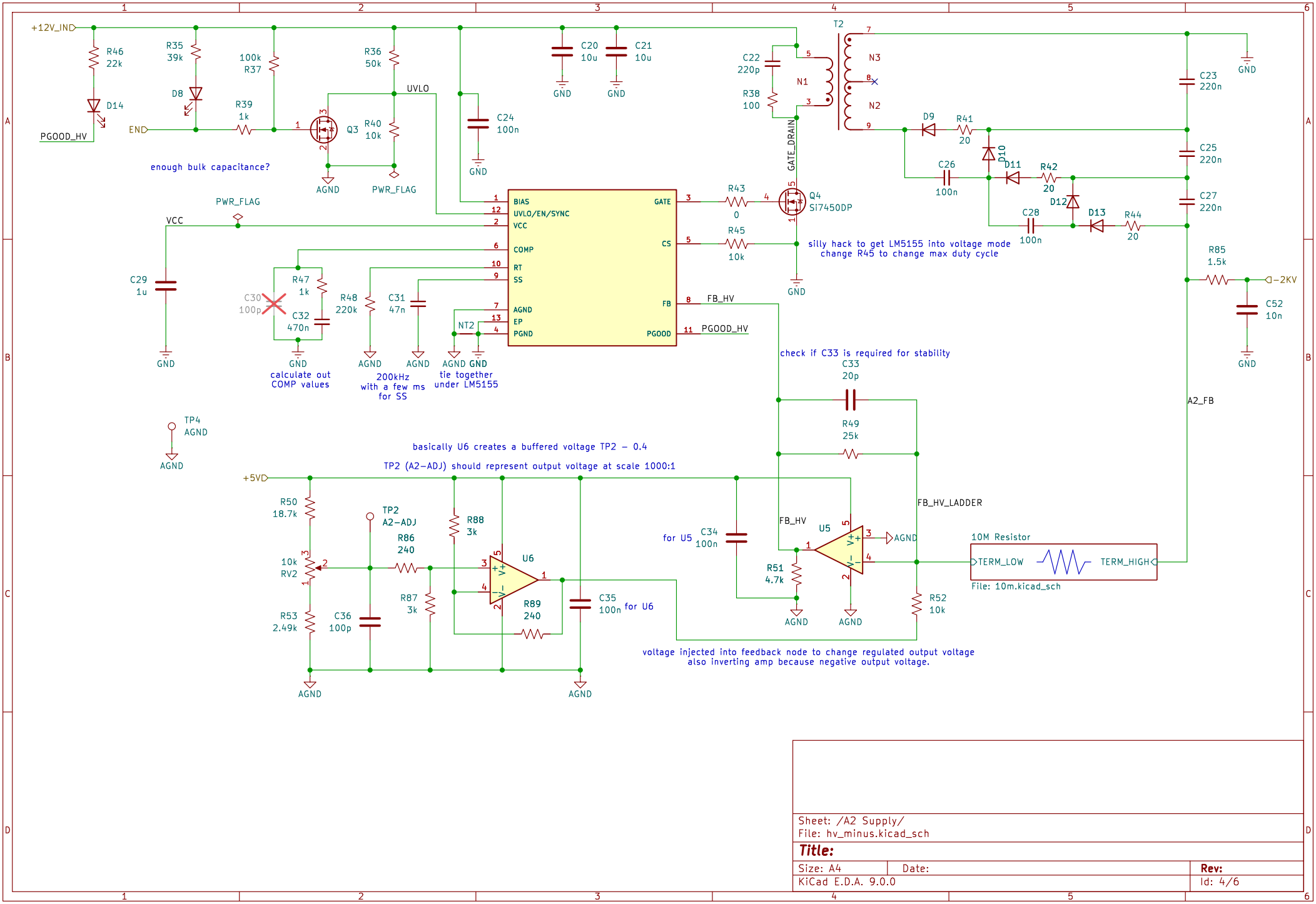

Sheet: /A2 Supply/
File: hv_minus.kicad_sch

Title:

Size: A4	Date:	Rev:
KiCad E.D.A. 9.0.0		Id: 4/6

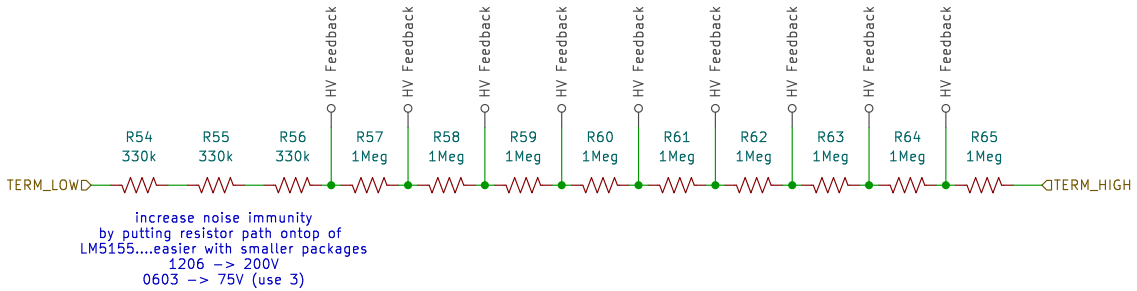

Sheet: /A2 Supply/10M Resistor/
File: 10m.kicad_sch

Title:

Size: A4	Date:	**Rev:**
KiCad E.D.A. 9.0.0		Id: 5/6

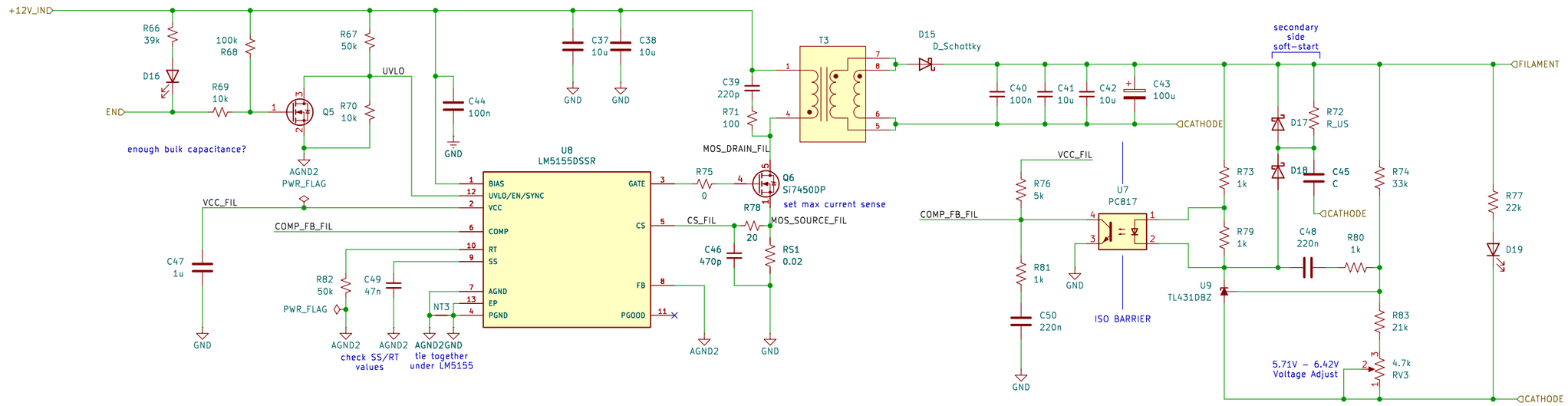

Sheet: /Filament Supply/
File: filament.kicad_sch

Title:

Size: A3	Date:	Rev:
KiCad E.D.A. 9.0.0		Id: 6/6