IIoT-Based Environmental Monitoring System for Industrial and Agricultural Applications

1 Introduction

Industrial and agricultural environments require proper control of temperature, humidity, and gas levels to ensure safety and prevent product damage. Continuous monitoring improves efficiency and reduces risks. Using IIoT, sensors, microcontrollers, and cloud platforms enable real-time monitoring and remote alerts through a simple, low-cost system.

2 Objectives

The main objectives of this project are:

- To monitor temperature, humidity, and gas concentration using sensors.
- To transmit data wirelessly using the MQTT protocol.
- To display sensor data on a centralized cloud dashboard.
- To generate automated email alerts during unsafe conditions.

3 System Overview

The system uses an ESP32 microcontroller to collect environmental data and send it to the cloud using MQTT. The cloud platform stores the data, displays it on a dashboard, and triggers reactive actions when thresholds are crossed. This allows users to monitor conditions remotely and respond quickly to emergencies.

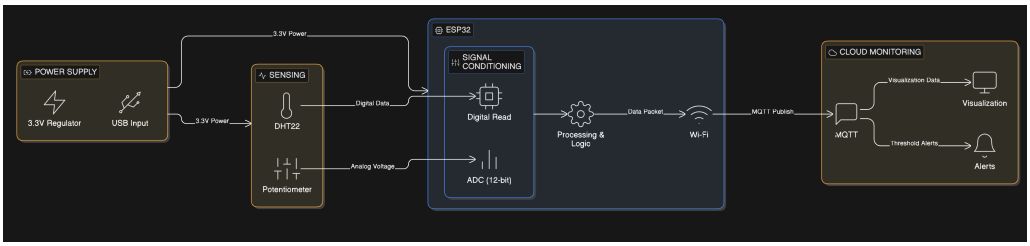

Figure 1: Block diagram of the IIoT-based environmental monitoring system using ESP32

4 System Architecture

4.1 Hardware Components

- **ESP32 DevKit V1**: Acts as the main controller with built-in Wi-Fi and a 12-bit ADC.
- **DHT22 Sensor**: Measures temperature and humidity (connected to GPIO 15).
- **Gas Sensor (Simulated)**: A potentiometer (connected to GPIO 34) simulates MQ-2 gas sensor output by varying voltage.

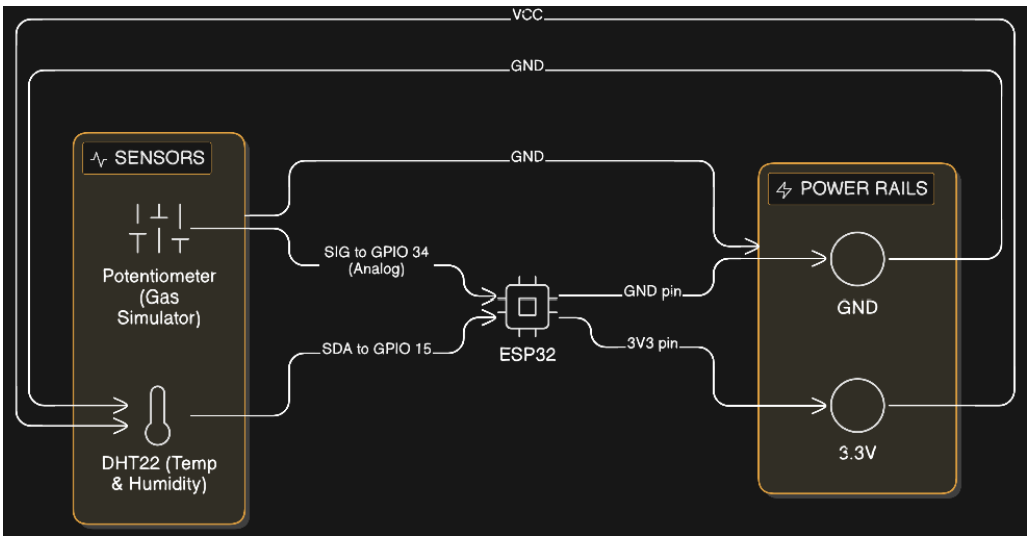

Figure 2: Hardware Block Diagram

4.2 Communication Setup

- **Protocol**: MQTT for efficient and reliable data transmission.
- **Cloud Platform**: Adafruit IO for data storage, visualization, and reactive alerts.

5 Software and Simulation

The system was developed and tested using the Wokwi simulation platform. Simulation allowed for the rigorous testing of sensor behavior, data processing, MQTT communication stability, and cloud integration without the need for physical hardware.

6 Data Flow

6.1 Data Acquisition (Sensing Layer)

The hardware uses a combination of digital and analog sensing to monitor the environment:

- **Ambient Monitoring**: The DHT22 sensor reads the temperature and humidity of the air surrounding the kiln.
- **Gas Simulation**: An analog potentiometer mimics the behavior of an MQ-2 smoke/gas sensor by varying voltage levels into the ESP32's ADC.

6.2 Edge Processing (Microcontroller Layer)

The ESP32 acts as the local brain, processing raw electrical signals into readable telemetry:

- **Resolution**: The 12-bit ADC converts voltages (0–3.3V) into digital values (0–4095).
- **Mathematical Mapping**: The firmware utilizes the `map()` function to scale raw gas readings into a human-readable range of 0–1000 PPM.
- **Software Scaling**: A multiplier (*10) is applied to the DHT22 reading to simulate high-temperature industrial kiln environments up to 800°C.

6.3 Data Transmission (Communication Layer)

Data is shared with the cloud using the MQTT protocol:

- **Cloud Connection**: The ESP32 connects to the Adafruit IO broker via Wi-Fi.
- **Data Transmission**: Every 10 seconds, the system publishes three data packets: temperature, humidity, and gas level.
- **Transmission Delay**: A 10-second delay is used to prevent data overflow.

6.4 Real-Time Visualization (Cloud Dashboard)

- Live gauges display current system status.
- Line charts show historical trends for more than 30 minutes.
- A virtual LED turns red when gas levels exceed 200 PPM.

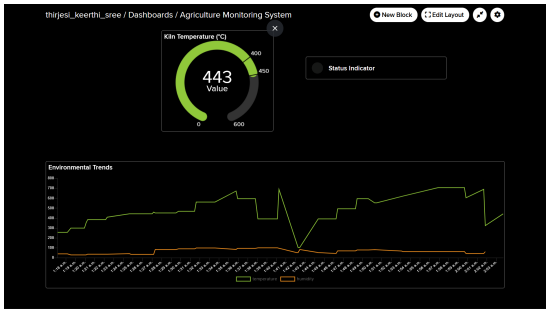

Figure 3: Dashboard visualization showing normal operating conditions (temperature within limit and gas level below 200 PPM)

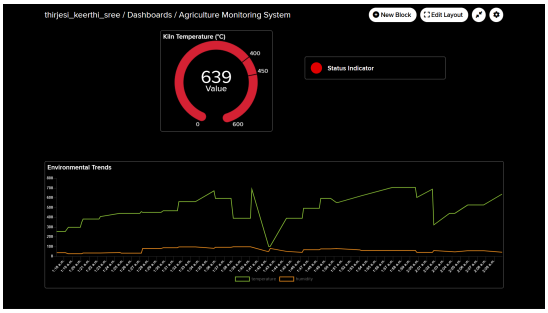

Figure 4: Dashboard visualization showing alert condition (temperature above 450°C and gas level exceeding 200 PPM)

6.5 Automated Emergency Response (Logic Layer)

- Trigger Condition: Temperature greater than 450°C.
- Notification: Emergency email with subject *CRITICAL: Kiln Overheat Detected!*
- Safety Hysteresis: 1-hour delay to prevent repeated alerts.

7 Safety Logic and Alerts

- Over-temperature email alert when temperature exceeds 450°C.
- Gas detection alert when gas levels exceed 200 PPM.
- Safety hysteresis to avoid notification spamming.

8 Field Deployment & Cost Optimization

8.1 Field Considerations

- Power supply using a 5V adapter or battery with solar support.
- IP65 enclosure for protection from dust and heat.
- Wi-Fi connectivity with options for long-range communication.

8.2 Bill of Materials

Component	Quantity	Estimated Price (INR)
ESP32 DevKit V1	1	600
DHT22 Sensor	1	350
MQ-2 Gas Sensor Module	1	250
IP65 ABS Enclosure	1	800
5V Power Adapter	1	300
Connecting Wire and PCB	1 Set	200
Total Cost		2500

9 Project Links

- Simulation Environment: [Wokwi Link]
- Cloud Backend: [Adafruit IO Link]
- Extended Data Logs (CSV): [Drive Link]

10 Conclusion

This project demonstrates a cost-effective IIoT-based environmental monitoring system for agricultural assistance. By combining an ESP32 microcontroller, MQTT communication, and cloud dashboards, the system enables real-time monitoring and automated safety responses. The design is flexible and can be expanded for real-world industrial and agricultural applications.