Remote Environmental Telemetry and Ground-Based Monitoring System

1 Introduction

Accurate monitoring of terrestrial environmental parameters is critical for ensuring the stability of sensitive technical infrastructure and regional ecological assets. Conventional manual data collection is often insufficient for high-cadence monitoring and remote site surveillance. By leveraging a distributed network of autonomous sensing nodes, low-power microcontrollers, and cloud-integrated telemetry, this system provides real-time, high-granularity data acquisition. This framework enables continuous monitoring of ground conditions, essential for characterizing localized environmental trends and ensuring the safety of mission-critical assets through autonomous alerts.

2 Objectives

The primary objectives of this project include:

- To acquire high-precision temperature, humidity, and atmospheric gas concentrations using distributed ground-based sensor nodes.
- To establish a robust, low-bandwidth telemetry pipeline using the MQTT protocol for efficient remote data transmission.
- To centralize field data on a cloud-integrated dashboard for real-time visualization and historical trend analysis.
- To implement automated threshold-based notification systems for immediate alerts during critical environmental anomalies.

3 System Overview

The architecture centers on an ESP32-based sensing node designed for autonomous data collection and transmission via a lightweight MQTT telemetry protocol. This edge-to-cloud pipeline ensures that terrestrial measurements are synchronized with a centralized monitoring platform. The system facilitates remote observational capabilities, allowing for the analysis of real-time ground data and the generation of deterministic automated alerts when environmental thresholds are breached.

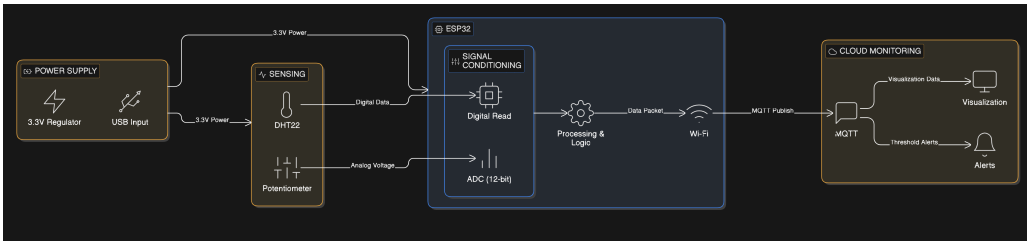

Figure 1: Block diagram of the Remote Environmental Telemetry and Ground-Based Monitoring System

4 System Architecture

4.1 Hardware Configuration

- **ESP32 DevKit V4**: Serves as the primary embedded controller, featuring dual-core processing, integrated Wi-Fi stack, and a multi-channel 12-bit Analog-to-Digital Converter (ADC).
- **DHT22 Sensor**: High-precision digital transducer for monitoring ambient temperature and humidity (interfaced via GPIO 15).
- **Environmental Gas Sensor (Simulated)**: A precision potentiometer (interfaced via GPIO 34) simulates the analog output of a terrestrial gas sensing module by modulating input voltage to the ADC.

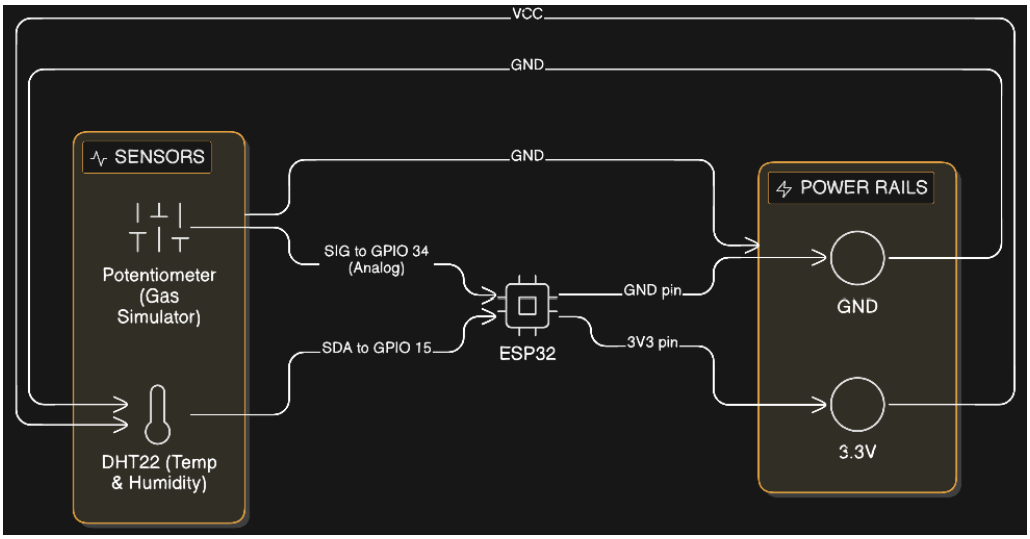

Figure 2: System Hardware Architecture and Interconnect Map

4.2 Communication Framework

- **Protocol**: MQTT (Message Queuing Telemetry Transport) for optimized, low-overhead data transmission.
- **Telemetry Platform**: Adafruit IO for cloud-based data persistence, real-time geospatial visualization, and deterministic alert triggering.

5 Software and Simulation

The system architecture was validated using the Wokwi simulation environment. This allowed for rigorous verification of sensor-to-firmware handshakes, MQTT protocol stability, and edge-to-cloud synchronization under simulated environmental stresses without the constraints of physical hardware.

6 Telemetry Data Flow

6.1 Data Acquisition (Sensing Layer)

The system utilizes a hybrid digital-analog sensing approach for comprehensive environmental characterization:

- **Ambient Profiling**: The DHT22 digital interface acquires precise atmospheric temperature and humidity metrics.
- **Gas Detection Emulation**: An analog interface translates variable voltage levels into representative gas concentration values, mimicking the response curve of an MQ-series sensor.

6.2 Edge Processing (Microcontroller Layer)

The ESP32 processes raw physical signals into calibrated telemetry frames:

- **ADC Resolution**: The 12-bit ADC converts analog inputs (0–3.3V) into high-resolution digital values (0–4095).
- **Calibration Logic**: The firmware implements linear mapping to scale raw ADC counts into standardized units (PPM).
- **Software Scaling**: Numerical scaling is applied to verify system response under extended environmental ranges, ensuring firmware stability across diverse terrestrial profiles.

6.3 Data Transmission (Communication Layer)

- **Broker Connection**: The ESP32 maintains a persistent link to the telemetry broker via the 802.11 Wi-Fi standard.
- **Uplink Frequency**: Telemetry packets containing temperature, humidity, and gas concentration are published at 10-second intervals.
- **Congestion Control**: A deterministic transmission delay is implemented to ensure packet integrity and prevent buffer overflow.

6.4 Real-Time Monitoring (Visualization Layer)

- Dynamic gauges provide instantaneous health-monitoring of the sensing node.
- Temporal line charts facilitate the analysis of environmental trends and long-duration stability.
- Status indicators switch to an alert state when concentration levels cross defined safety thresholds.

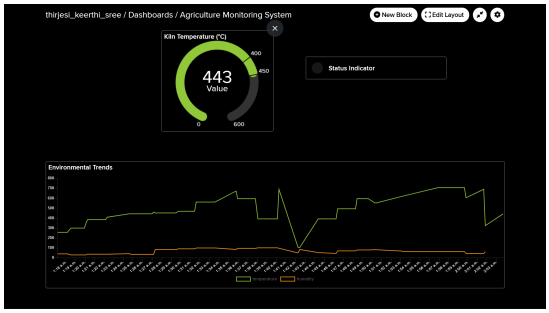

Figure 3: Telemetry dashboard under nominal operating conditions.

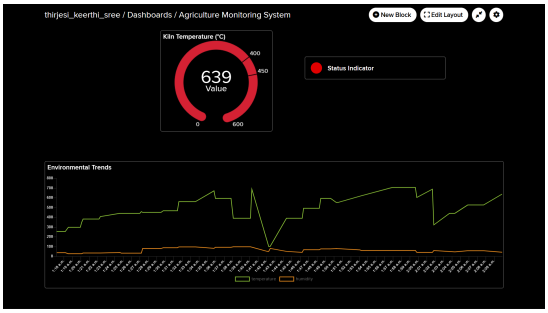

Figure 4: Telemetry dashboard during a detected environmental anomaly.

6.5 Autonomous Response (Logic Layer)

- **Trigger Condition**: Detection of thermal anomalies exceeding defined operational limits (450°C).
- **Notification**: Automated dispatch of high-priority telemetry alerts via email protocols (SMTP).
- **System Hysteresis**: Implementation of temporal hysteresis logic to prevent redundant triggering during transient fluctuations.

7 Safety Verification and Alerts

The system incorporates autonomous safety logic to manage environmental anomalies:

- Automated alert generation for over-temperature conditions.
- Deterministic detection of elevated gas concentrations.
- Integrated hysteresis to ensure notification stability and reduce telemetry overhead.

8 Field Deployment & Reliability Considerations

8.1 Deployment Specifications

- **Power Architecture**: Redundant power options including 5V DC regulated supply or autonomous battery systems with solar harvesting.
- **Environmental Hardening**: IP65-rated ABS enclosures for protection against ingress, particulate matter, and thermal stress.
- **Connectivity**: Scalable wireless architecture with provisions for extended-range Sub-GHz protocols like LoRa.

9 Project Links

- Simulation Environment: [Wokwi Link]
- Cloud Backend: [Adafruit IO Link]
- Extended Data Logs (CSV): [Drive Link]

10 Conclusion

This project successfully demonstrates a robust terrestrial telemetry system for continuous environmental monitoring. By integrating an ESP32-based sensing node with a lightweight MQTT communication protocol and a centralized cloud interface, the system achieves real-time data acquisition and deterministic safety responses. The modular architecture ensures high operational reliability and provides a scalable framework for long-duration monitoring of mission-critical environments. The design effectively bridges the gap between local sensing and remote data analysis, offering a reliable platform for autonomous environmental surveillance and anomaly detection.