MOBILE PHONE DETECTOR

Project Overview

Introduction

The **Mobile Phone Detector Circuit** is an innovative electronic system designed to detect radio frequency (RF) signals emitted by mobile phones during calls, messaging, and internet use. By amplifying these weak RF signals, the circuit activates an LED indicator, providing a visual alert of mobile phone activity in restricted areas such as exam halls, meeting rooms, and security-sensitive locations.

Objectives

- To develop a compact and efficient circuit that detects RF signals in the **800 MHz – 2.5 GHz** range.
- To provide a cost-effective solution for identifying unauthorized mobile phone usage.
- To enhance security in restricted environments by alerting authorities to mobile phone activity.

Working Principle-

Detection of Mobile RF Signals -

The mobile phone detector circuit senses RF signals in the **800 MHz to 2.5 GHz** range, typically emitted during active mobile communication. The circuit operates based on electromagnetic interference (EMI) principles, using high-value resistors and capacitors to enhance sensitivity.

Signal Amplification and LED Activation -

- The **CA3130 op-amp** amplifies weak RF signals received from nearby mobile phones.
- The input signal is fed into the **non-inverting terminal** of the op-amp.
- The gain of the circuit is regulated using a **100KΩ resistor** and a **2.2MΩ**

resistor.

- A BC548 transistor acts as a switch—when a strong enough signal is detected, the transistor turns on, allowing current to pass through the LED, which lights up to indicate mobile phone activity.

Signal Amplification and LED Activation -

- The **CA3130 op-amp** amplifies weak RF signals received from nearby mobile phones.
- The input signal is fed into the **non-inverting terminal** of the op-amp.
- The gain of the circuit is regulated using a **100KΩ resistor** and a **2.2MΩ resistor**.
- A **BC548 transistor** acts as a switch—when a strong enough signal is detected, the transistor turns on, allowing current to pass through the **LED**, which lights up to indicate mobile phone activity.

Components & Their Functions

Component	Function
CA3130 IC (Op-Amp)	Amplifies weak RF signals.
BC548 transistor	Acts as a switch to activate the LED.
ĮED	Provides a visual alert when a mobile phone is detected.
1KΩ Resistor	To bring transistors in active region
2.2MΩ Resistors	Enhances sensitivity to weak RF signals.
100KΩ Resistor	Controls op-amp gain.
47pF Capacitor	Filters high-frequency noise.
0.22µF Capacitor	Allows AC signals to pass, blocking DC.
100µF Capacitor	Stabilizes power supply.
9V Battery & Clip	Powers the circuit.
Breadboard/PCB & Wires	Assembles and connects components.

Practical Applications

- **Exam Halls or Institutions** – Prevents cheating by detecting mobile phones.
- **Corporate Meetings** – Confidentiality by restricting unauthorized phone usage.
- **Intensive Care Units (ICU)** – Prevents RF interference with medical equipment.
- **Security-Sensitive Zones** – Enhances security in military areas, embassies, and

research labs.

Circuit diagram

(A detailed circuit diagram can be included here to visually represent the connections and working of the components.)

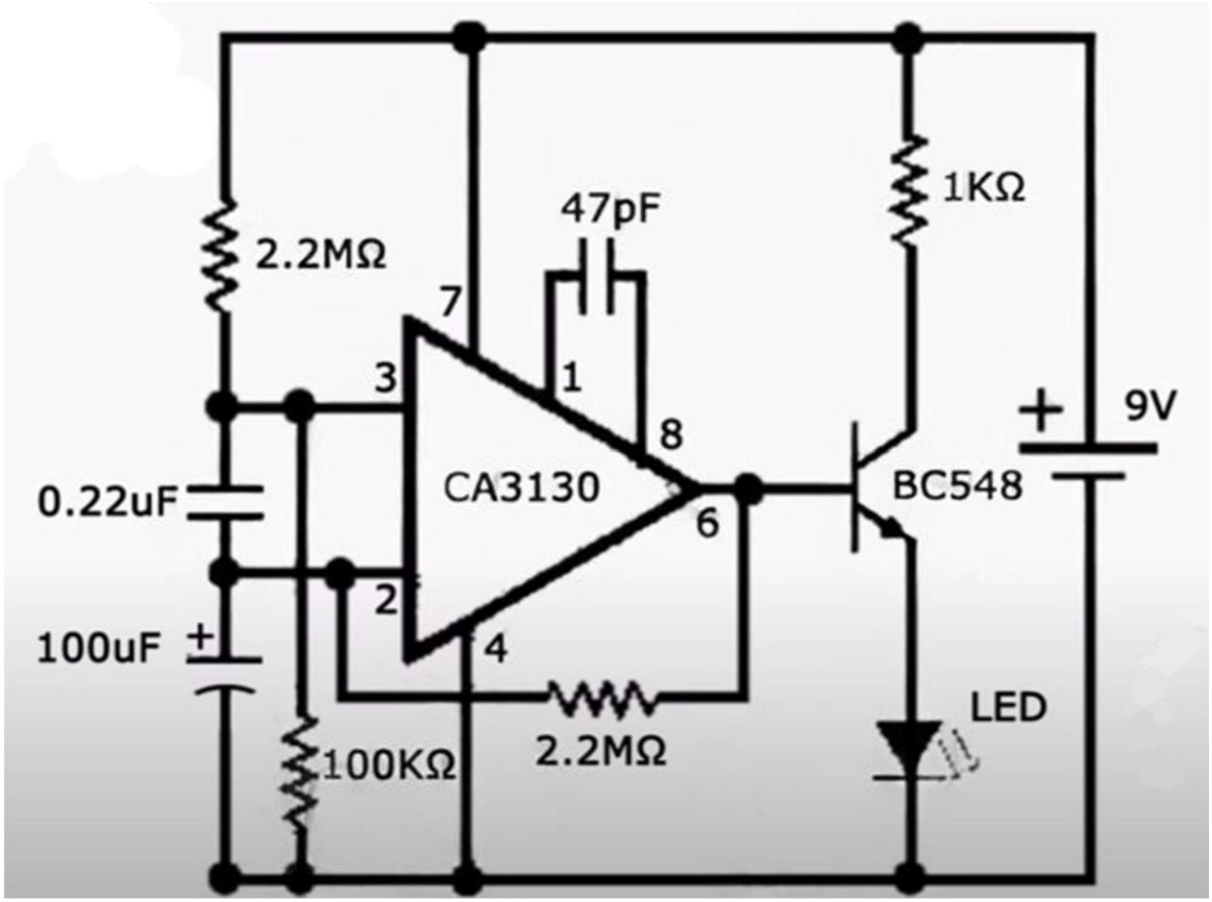

Conclusion-

The **Mobile Phone Detector Circuit** is a simple yet effective solution for detecting unauthorized mobile phone activity. Its affordability, ease of implementation, and effectiveness in security-sensitive areas make it a valuable tool for enforcing mobile phone restrictions. Future enhancements could further improve its functionality and adaptability across different applications.