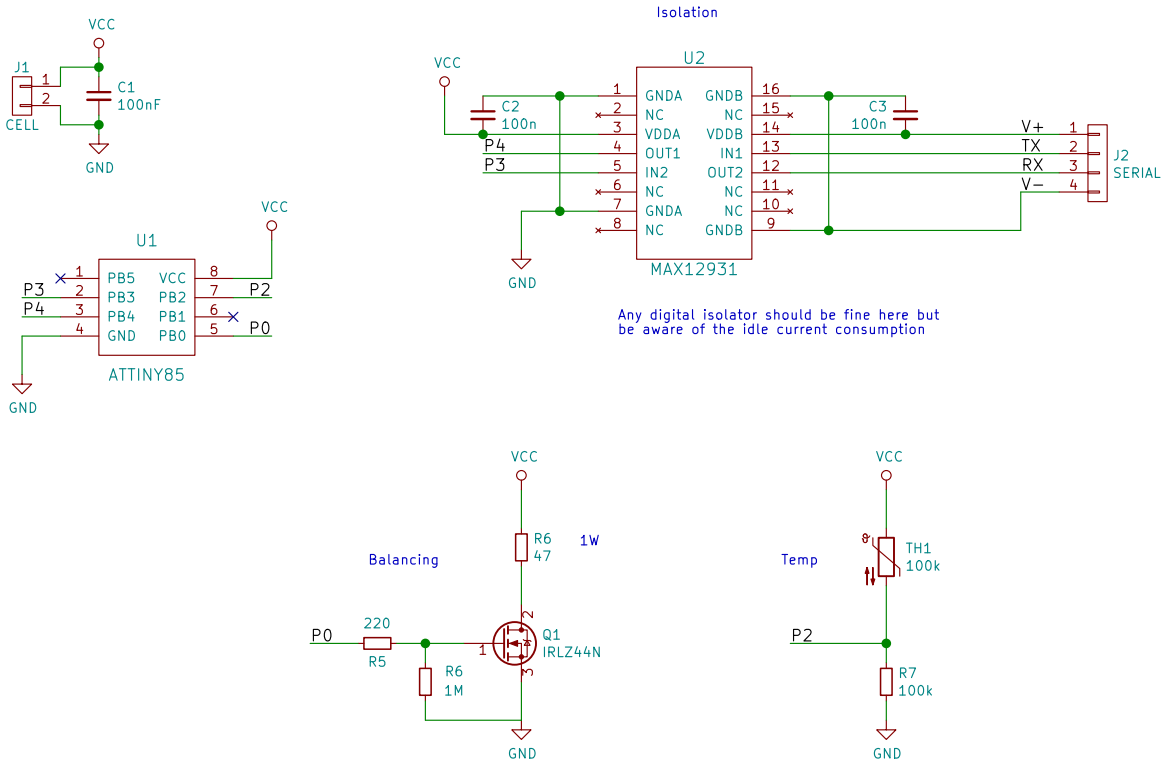

Sheet: /
File: cell−monitor.sch

Title: Cell Monitor

Size: A4	Date:	Rev:
KiCad E.D.A. kicad (2017−07−30 revision e10f0c7)−master		Id: 1/1