Device and Link Discovery in Industrial Ethernet Networks

Thomas Marangoni 01634007
16 March 2021

Bachelor Thesis
TU Wien, Automation Systems Group

Industry 4.0

Interoperability

Open- and vendor-independent protocols (eg. Time-Sensitive Networking (TSN))

Flexibility

Modular systems with high reconfigurability and reusability

Automation

Detection of the network configuration and reconfiguration with a single button press

LLDP

Link Layer Discovery Protocol

Open and vendor-independent protocol
Advertisement of identity and capabilities
Daemon is broadcasting information
Daemon is collecting information from neighbors
One-Way protocol ⇒ No Acknowledgments

SNMP

Simple Network Management Protocol

- Open and vendor-independent protocol
- Network monitoring and management
- Three different Versions
- Connectionless Protocol based on UDP
- Possibility of Notifications via Traps
- Uses MIB for data

NETCONF

Network Configuration Protocol

Open and vendor-independent protocol
Network monitoring and management
Uses Remote Procedure Calls (RPC)
Session Based Protocol
Possibility of Notifications
Uses YANG for data

Better Routes

with more Information for TSN

Network graphs with ports
Link speed
Link length
Link material

Network Scanning Flow

Network devices are using LLDP & SNMP

Nodes have SNMP traps installed

Parallel SNMP detection scan

Full SNMP scan per device

Network Graph gets rebuilt after every scan

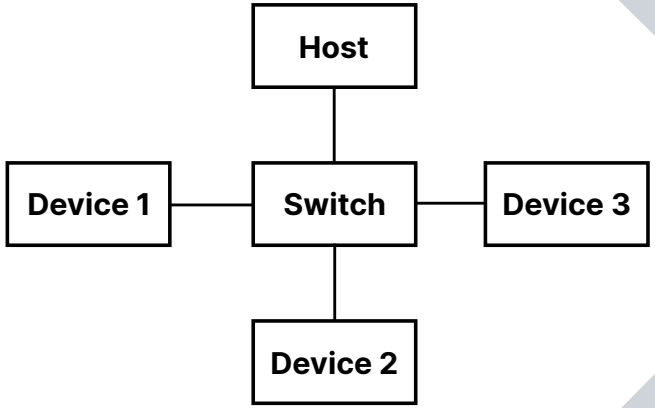

Network Scanning Flow

Network devices are using LLDP & SNMP

Nodes have SNMP traps installed

Parallel SNMP detection scan

Full SNMP scan per device

Network Graph gets rebuilt after every scan

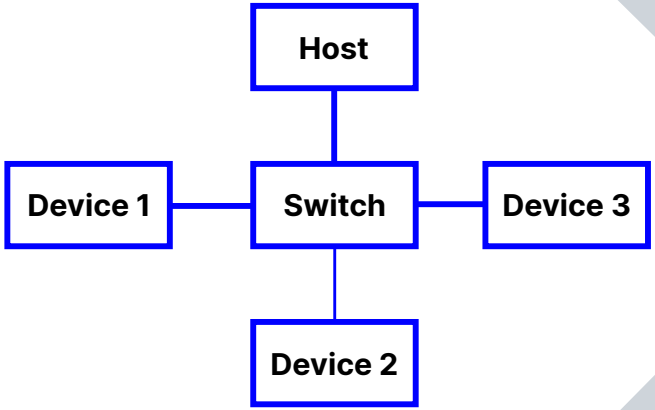

Network Scanning Flow

Network devices are using LLDP & SNMP

Nodes have SNMP traps installed

Parallel SNMP detection scan

Full SNMP scan per device

Network Graph gets rebuilt after every scan

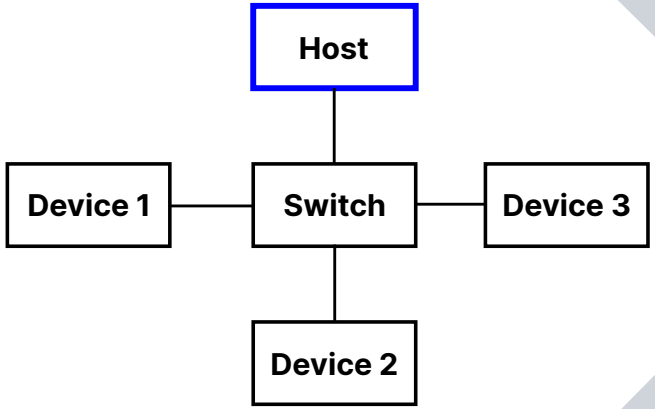

Network Scanning Flow

Network devices are using LLDP & SNMP

Nodes have SNMP traps installed

Parallel SNMP detection scan

Full SNMP scan per device

Network Graph gets rebuilt after every scan

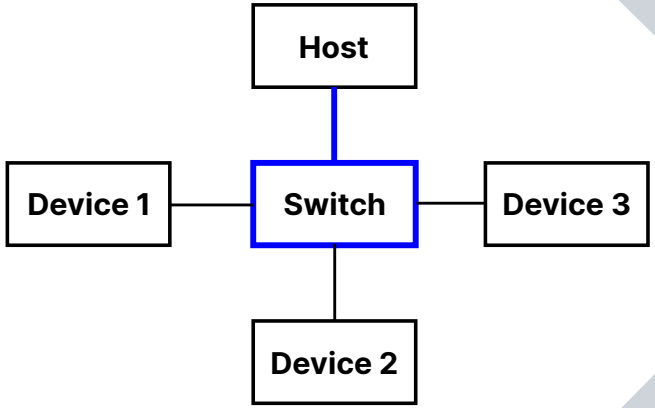

Network Scanning Flow

Network devices are using LLDP & SNMP

Nodes have SNMP traps installed

Parallel SNMP detection scan

Full SNMP scan per device

Network Graph gets rebuilt after every scan

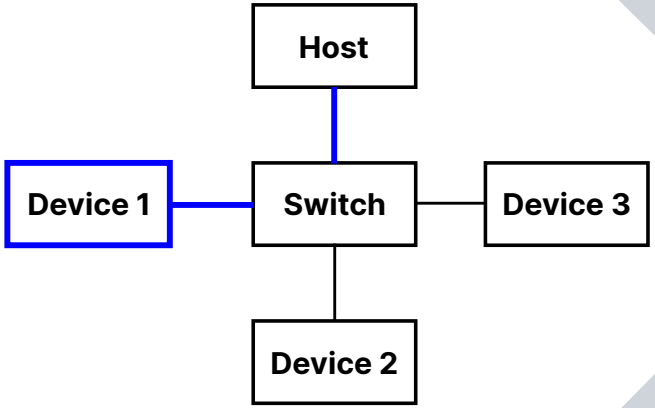

Network Scanning Flow

Network devices are using LLDP & SNMP

Nodes have SNMP traps installed

Parallel SNMP detection scan

Full SNMP scan per device

Network Graph gets rebuilt after every scan

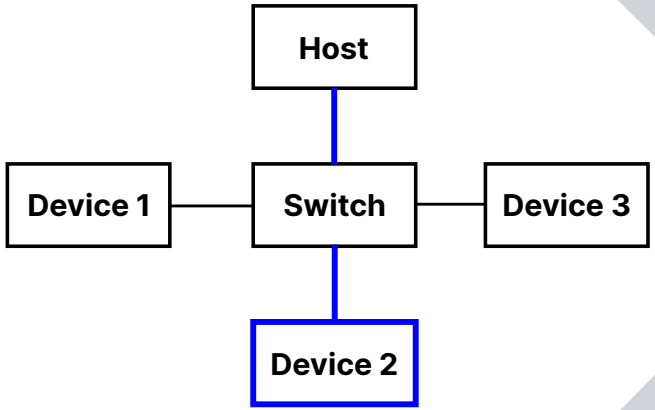

Network Scanning Flow

Network devices are using LLDP & SNMP

Nodes have SNMP traps installed

Parallel SNMP detection scan

Full SNMP scan per device

Network Graph gets rebuilt after every scan

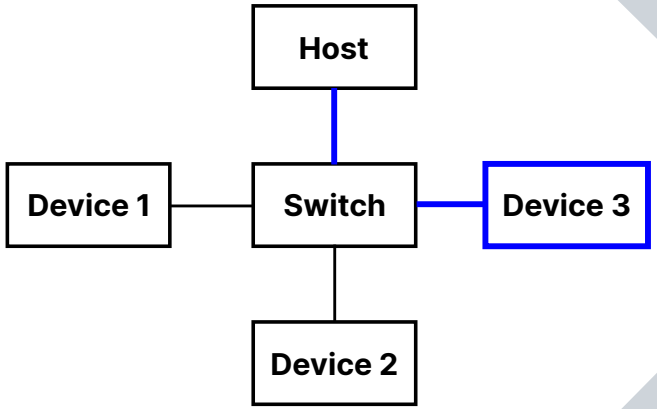

Network Scanning Flow

Network devices are using LLDP & SNMP

Nodes have SNMP traps installed

Parallel SNMP detection scan

Full SNMP scan per device

Network Graph gets rebuilt after every scan

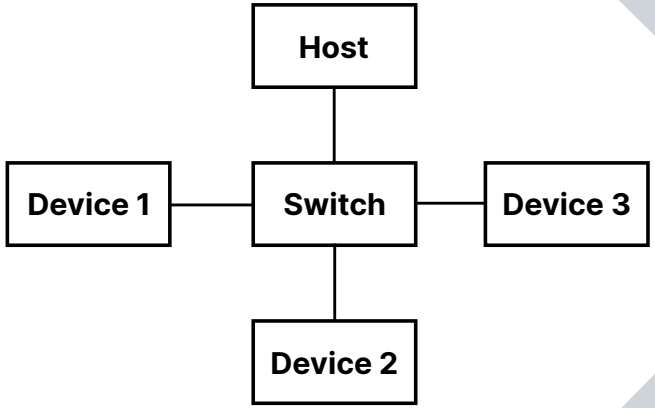

Network Scanning Flow

Network devices are using LLDP & SNMP

Nodes have SNMP traps installed

Parallel SNMP detection scan

Full SNMP scan per device

Network Graph gets rebuilt after every scan

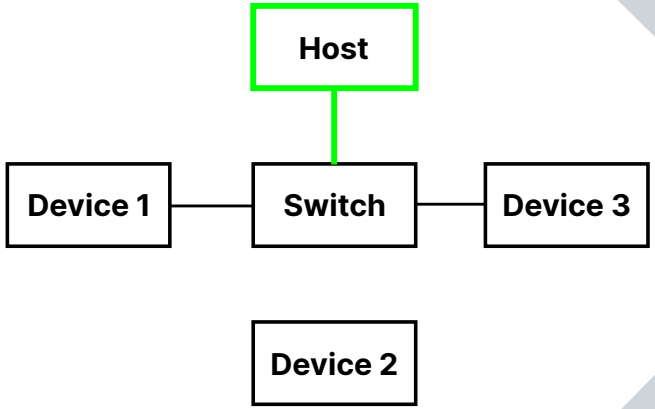

Network Scanning Flow

Network devices are using LLDP & SNMP

Nodes have SNMP traps installed

Parallel SNMP detection scan

Full SNMP scan per device

Network Graph gets rebuilt after every scan

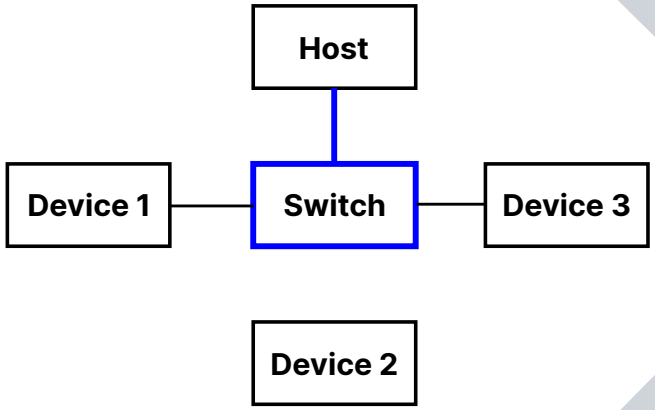

Network Scanning Flow

Network devices are using LLDP & SNMP

Nodes have SNMP traps installed

Parallel SNMP detection scan

Full SNMP scan per device

Network Graph gets rebuilt after every scan

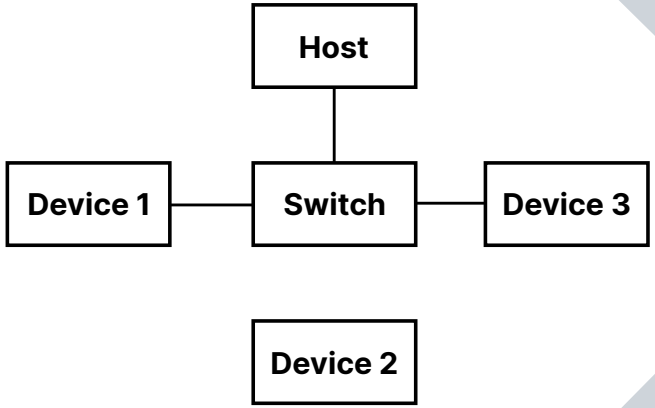

Network Scanning Flow

Network devices are using LLDP & SNMP

Nodes have SNMP traps installed

Parallel SNMP detection scan

Full SNMP scan per device

Network Graph gets rebuilt after every scan

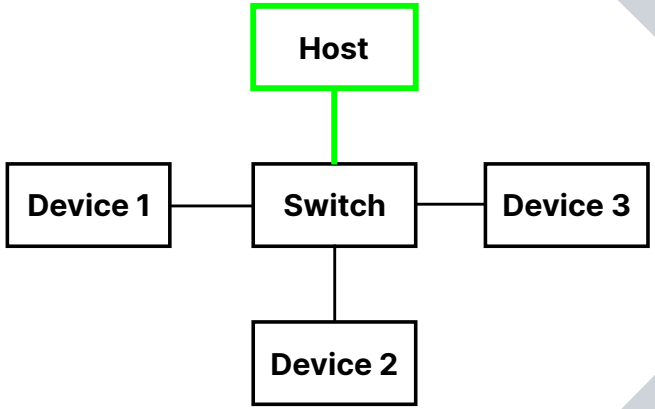

Network Scanning Flow

Network devices are using LLDP & SNMP

Nodes have SNMP traps installed

Parallel SNMP detection scan

Full SNMP scan per device

Network Graph gets rebuilt after every scan

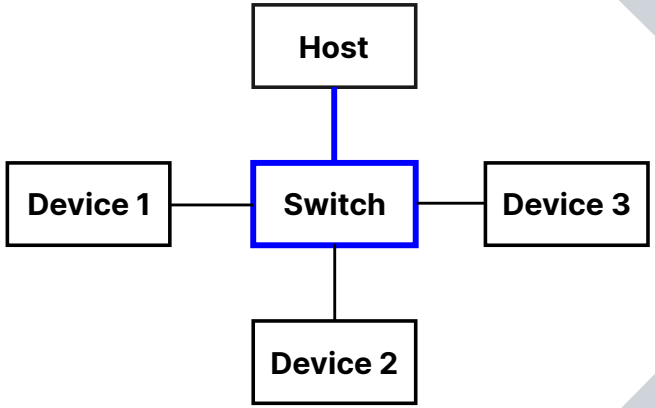

Network Scanning Flow

Network devices are using LLDP & SNMP

Nodes have SNMP traps installed

Parallel SNMP detection scan

Full SNMP scan per device

Network Graph gets rebuilt after every scan

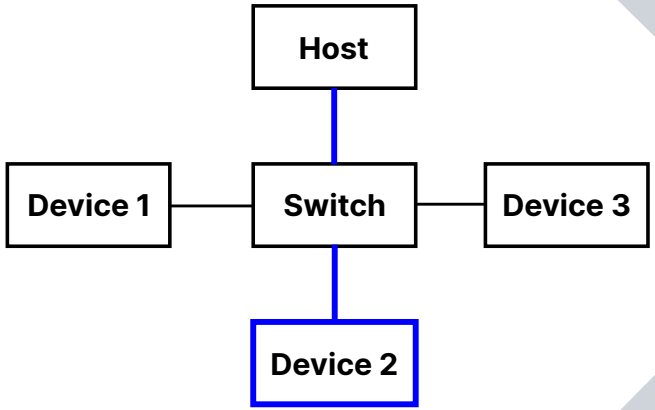

Network Scanning Flow

Network devices are using LLDP & SNMP

Nodes have SNMP traps installed

Parallel SNMP detection scan

Full SNMP scan per device

Network Graph gets rebuilt after every scan

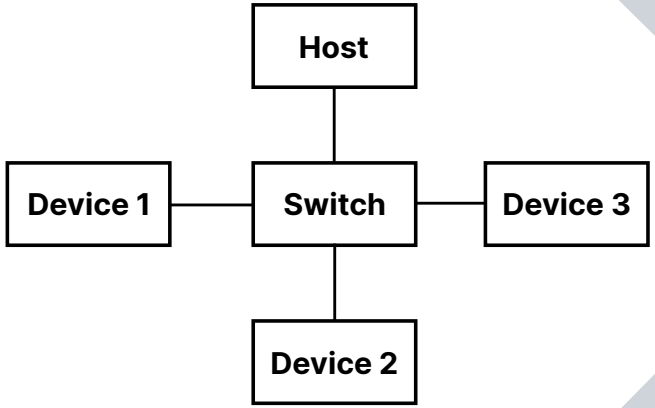

Requirements

For devices - Part I

SNMP daemon
Support SNMPv1 and SNMPv2c
LLDP daemon
LLDP MIB Entry
Each port needs to have a unique MAC address

Requirements

For devices - Part II

> LLDPd must send the port MAC address as ChassisID
> Remote port data must be connected to a local port in the MIB data
> Every network node (except end nodes) must send an SNMPv1 trap to the application on interface change

Firmware

Different MIB data between firmware versions on the same model.

OID Alias

Every manufacture can have a own OID table, which represents the same data defined in standardized OID tables.

Length of link

There is no default way to get the length of a link between two device.

Material of link

There is no standardized way to access the material of a link.

Non existing MAC-Address

Some devices are returning MAC-Addresses for ports on LLDP, which don’t exist in any interface entry.

LLDP connected to Bridge

Some manufactures are linking the collected LLDP data to the whole bridge and not single ports.

Results

Contribution and Conclusion

Partly working prototype

SNMP has its limits, NETCONF would be better

Work from manufacturer needed

Thesis on GitHub.com/ThomasMarangoni/discovery

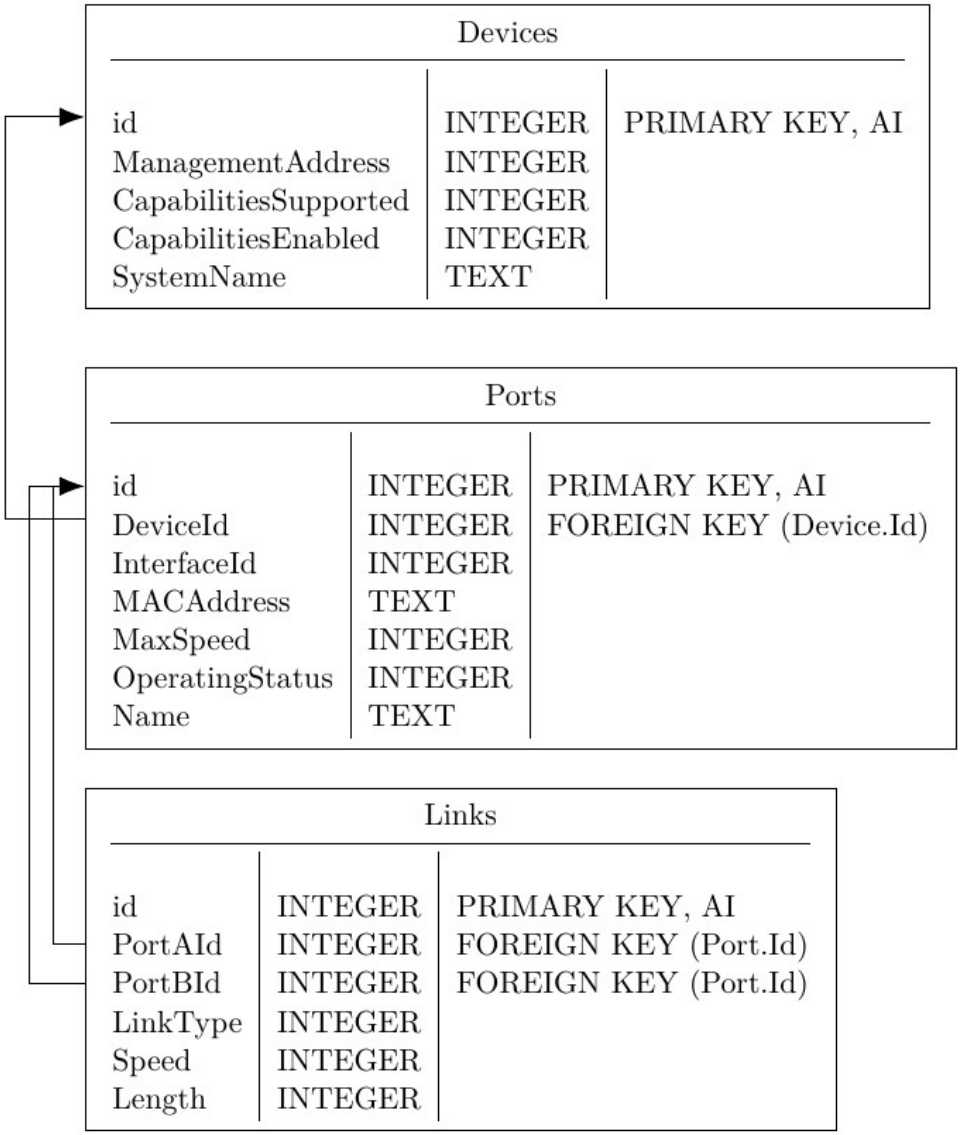
Devices
id INTEGER PRIMARY KEY, AI
ManagementAddress INTEGER
CapabilitiesSupported INTEGER
CapabilitiesEnabled INTEGER
SystemName TEXT
Ports
id INTEGER PRIMARY KEY, AI
DeviceId INTEGER FOREIGN KEY (Device.Id)
InterfaceId INTEGER
MACAddress TEXT
MaxSpeed INTEGER
OperatingStatus INTEGER
Name TEXT
Links
id INTEGER PRIMARY KEY, AI
PortAId INTEGER FOREIGN KEY (Port.Id)
PortBId INTEGER FOREIGN KEY (Port.Id)
LinkType INTEGER
Speed INTEGER
Length INTEGER


start
Initialization
deep network scan
create database
scan found devices
snmpd setup
waiting for data from traps
data transfer
waiting for traps
parsing data from trap
exit signal received
reading traps
scanning sender of trap
waiting until threads finished
cleaning up
exit