WEERSTANDEN AANPASSEN

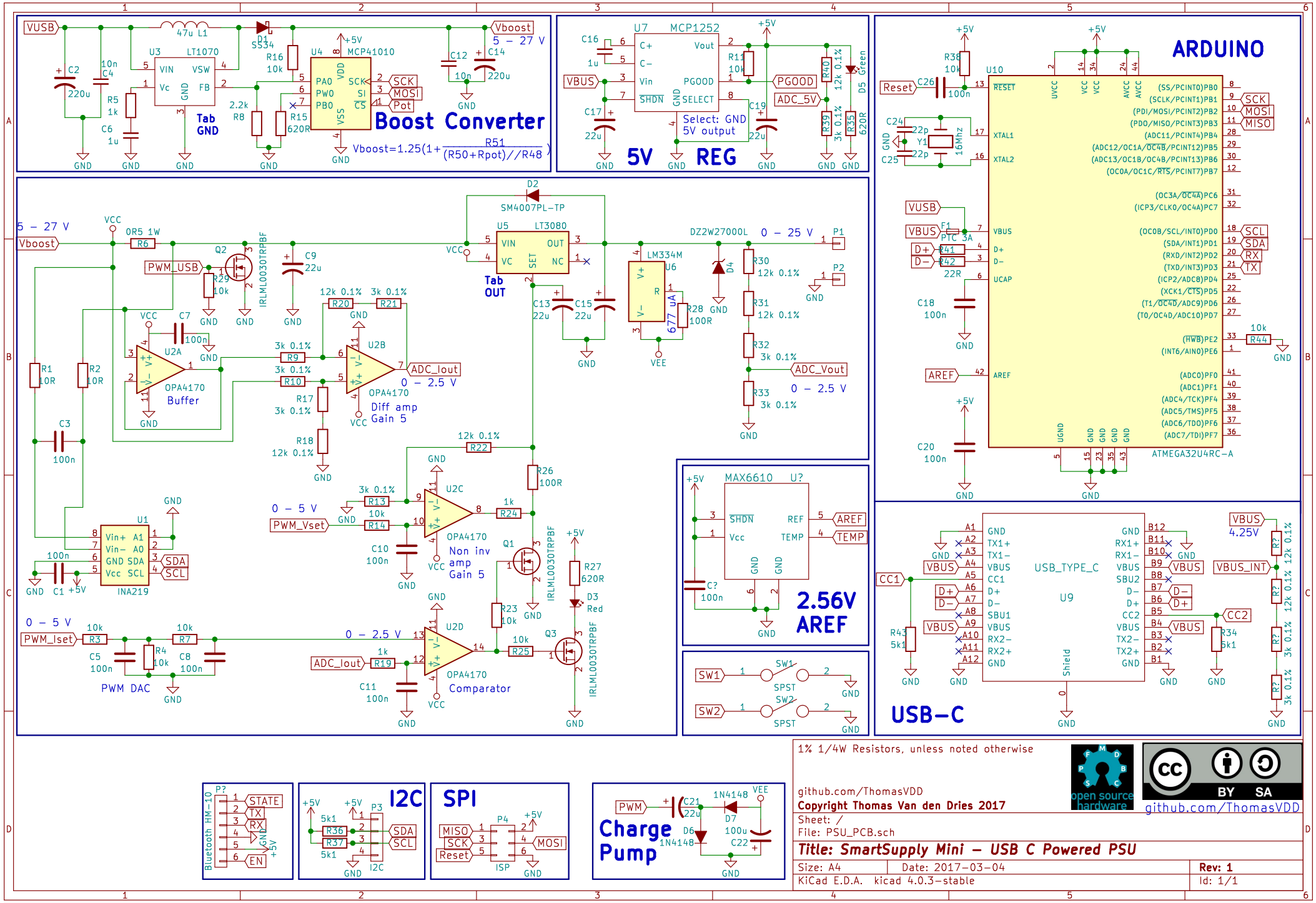

1% 1/4W Resistors, unless noted otherwise

github.com/ThomasVDD

Copyright Thomas Van den Dries 2017

Sheet: /

File: PSU_PCB.sch

Title: SmartSupply Mini – USB C Powered PSU

Size: A4	Date: 2017-03-04	Rev: 1
KiCad E.D.A. kicad 4.0.3-stable		Id: 1/1

open source hardware
BY SA
github.com/ThomasVDD