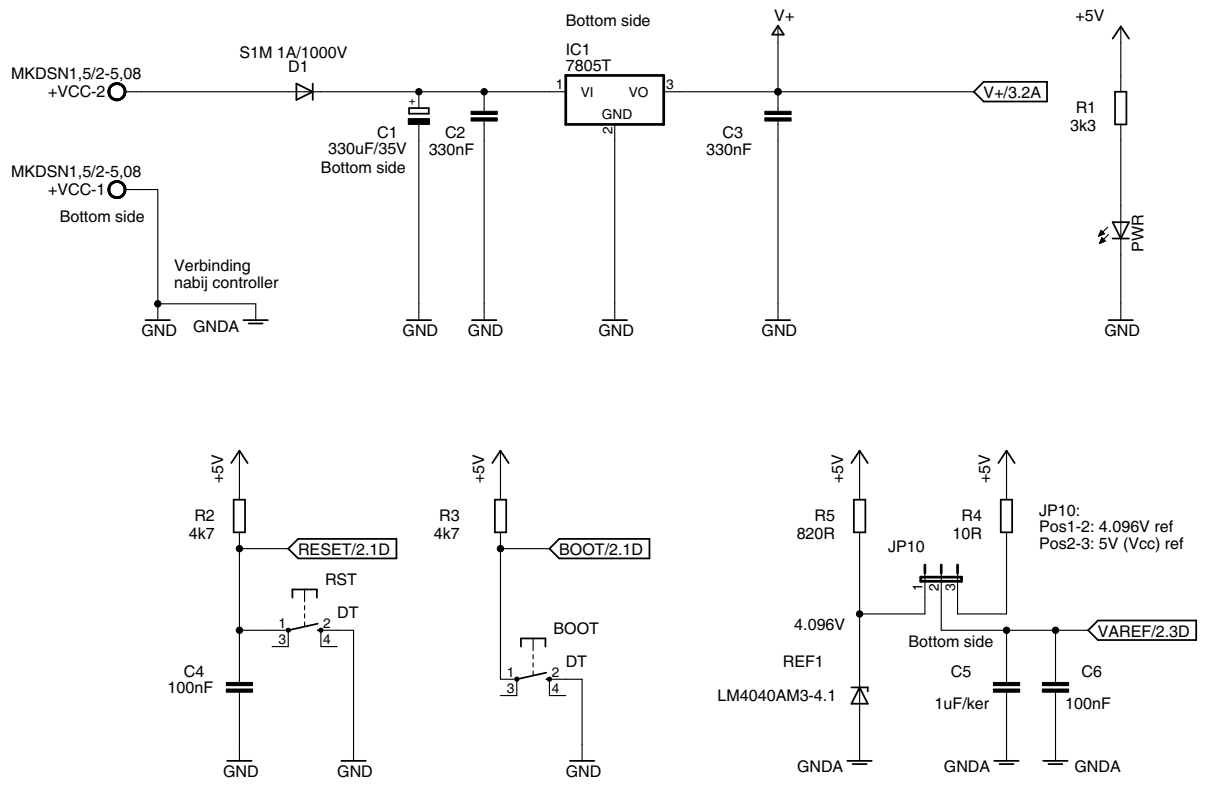

XC888 SBC

De Nayer Inst.

D. Pauwels

Power,reset,boot,ref

XC888 SBC_v11

8/06/2010 15:15:18

Sheet: 1/7

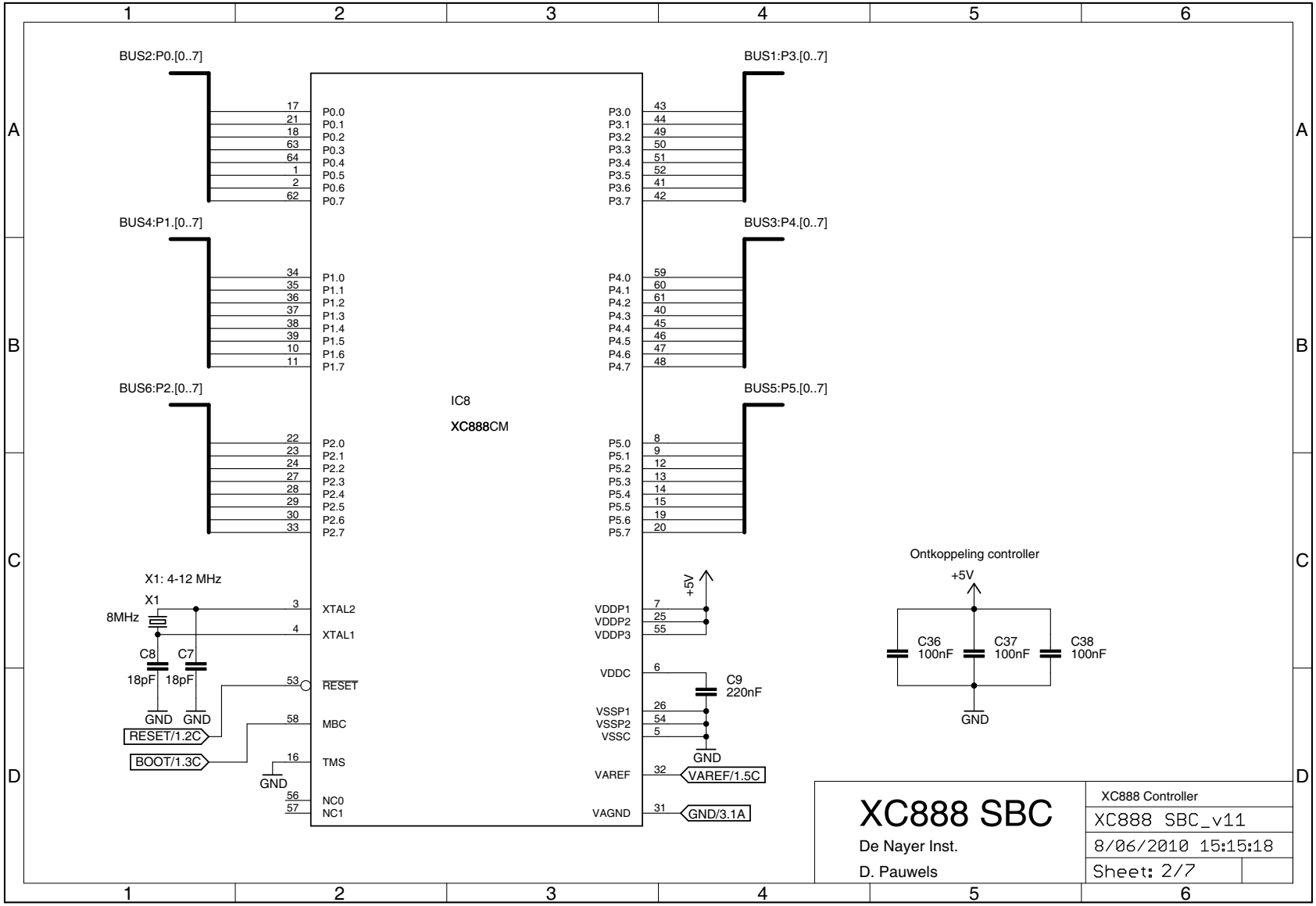

XC888 SBC

De Nayer Inst.

D. Pauwels

XC888 Controller

XC888 SBC_v11

8/06/2010 15:15:18

Sheet: 2/7

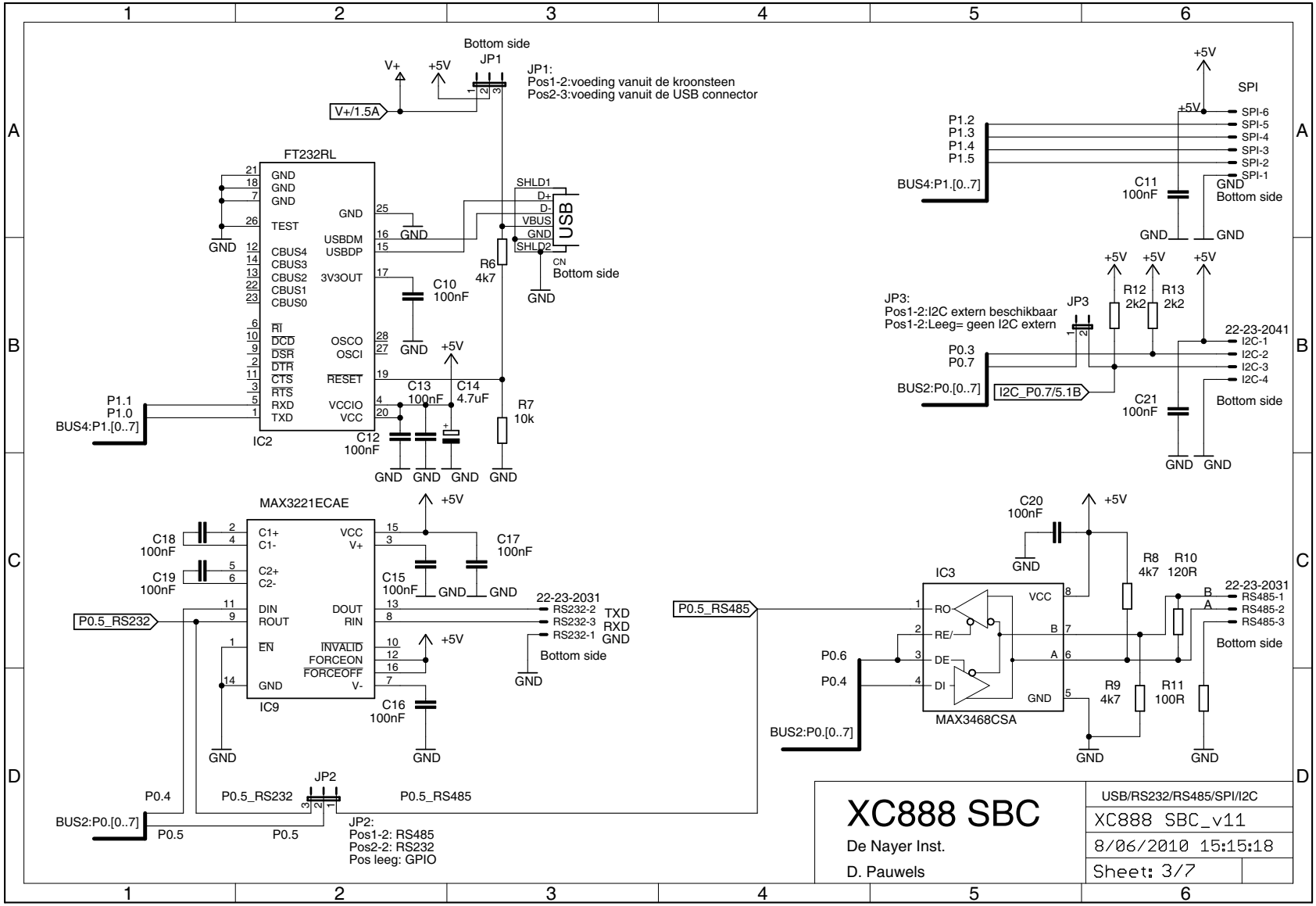

XC888 SBC

De Nayer Inst.

D. Pauwels

USB/RS232/RS485/SPI/I2C

XC888 SBC_v11

8/06/2010 15:15:18

Sheet: 3/7

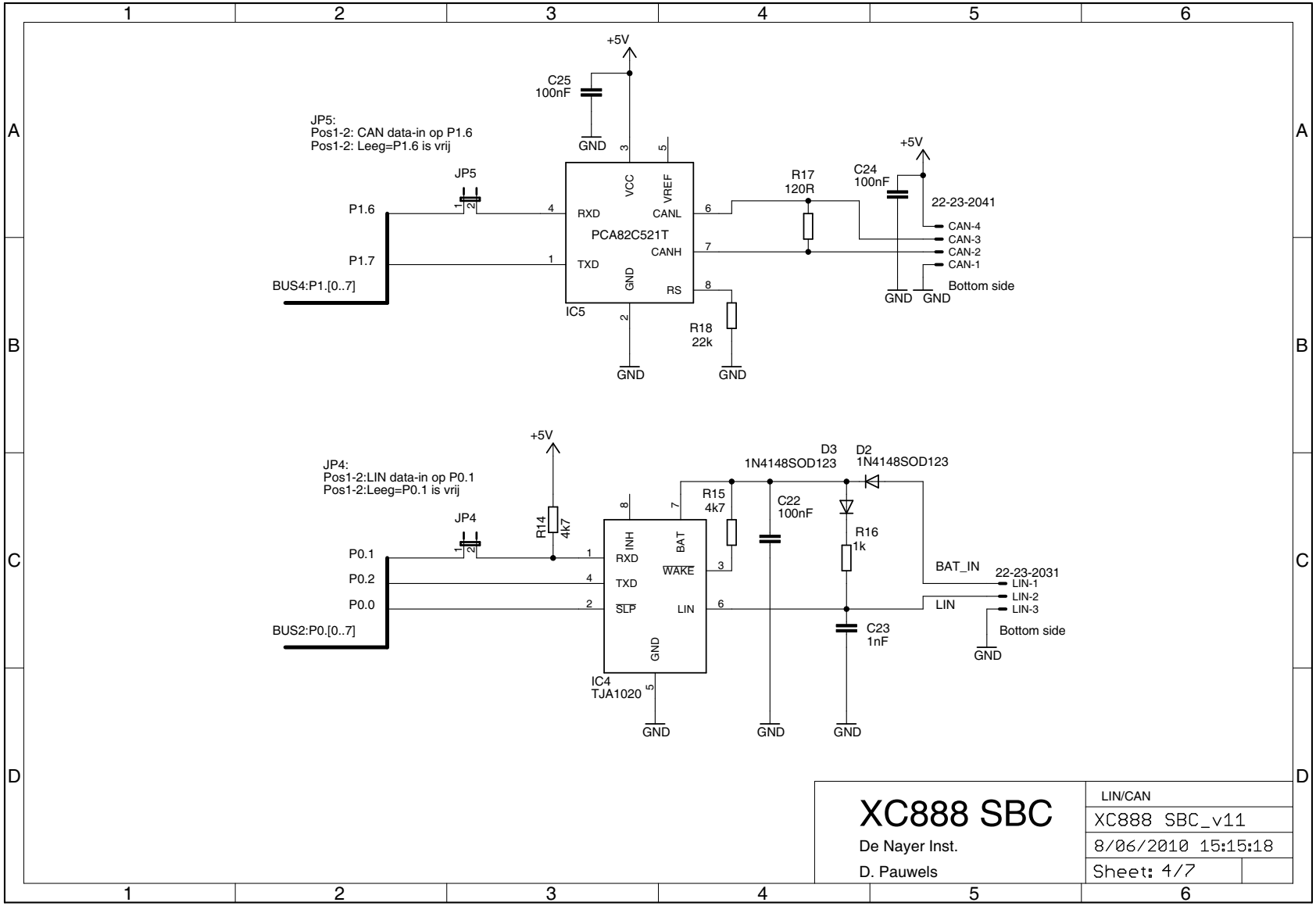
+5V
C25
100nF
GND
JP5:
Pos1-2: CAN data-in op P1.6
Pos1-2: Leeg=P1.6 is vrij
JP5
P1.6
P1.7
BUS4:P1.[0..7]
VCC
VREF
RXD
CANL
PCA82C521T
CANH
TXD
GND
RS
IC5
R17
120R
C24
100nF
22-23-2041
CAN-4
CAN-3
CAN-2
CAN-1
Bottom side
R18
22k
JP4:
Pos1-2:LIN data-in op P0.1
Pos1-2:Leeg=P0.1 is vrij
JP4
P0.1
P0.2
P0.0
BUS2:P0.[0..7]
R14
4k7
INH
BAT
RXD
WAKE
TXD
SLP
LIN
GND
IC4
TJA1020
R15
4k7
C22
100nF
D3
1N4148SOD123
D2
1N4148SOD123
R16
1k
C23
1nF
BAT_IN
LIN
22-23-2031
LIN-1
LIN-2
LIN-3
Bottom side
XC888 SBC
De Nayer Inst.
D. Pauwels
LIN/CAN
XC888 SBC_v11
8/06/2010 15:15:18
Sheet: 4/7

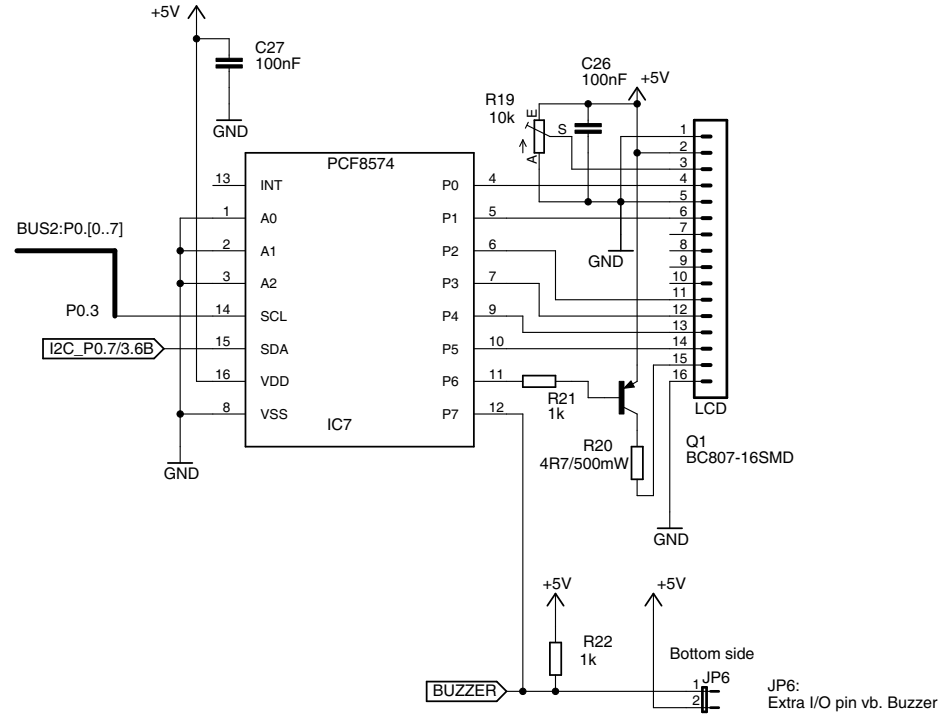

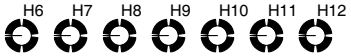

MOUNT-PAD-ROUND3.2

XC888 SBC

De Nayer Inst.

D. Pauwels

LCD/PORT EXPANDER

XC888 SBC_v11

8/06/2010 15:15:18

Sheet: 5/7

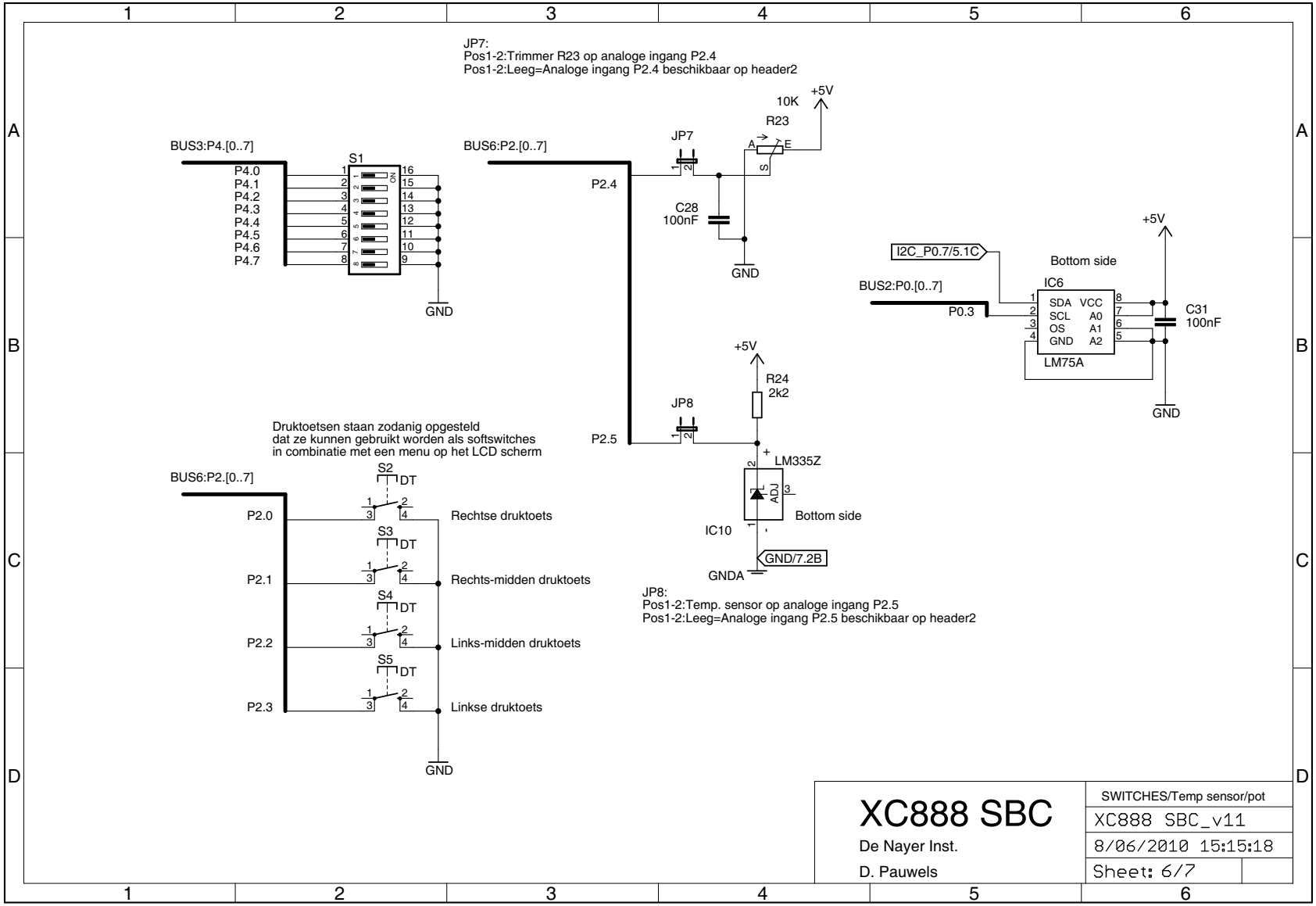

XC888 SBC

De Nayer Inst.

D. Pauwels

SWITCHES/Temp sensor/pot

XC888 SBC_v11

8/06/2010 15:15:18

Sheet: 6/7

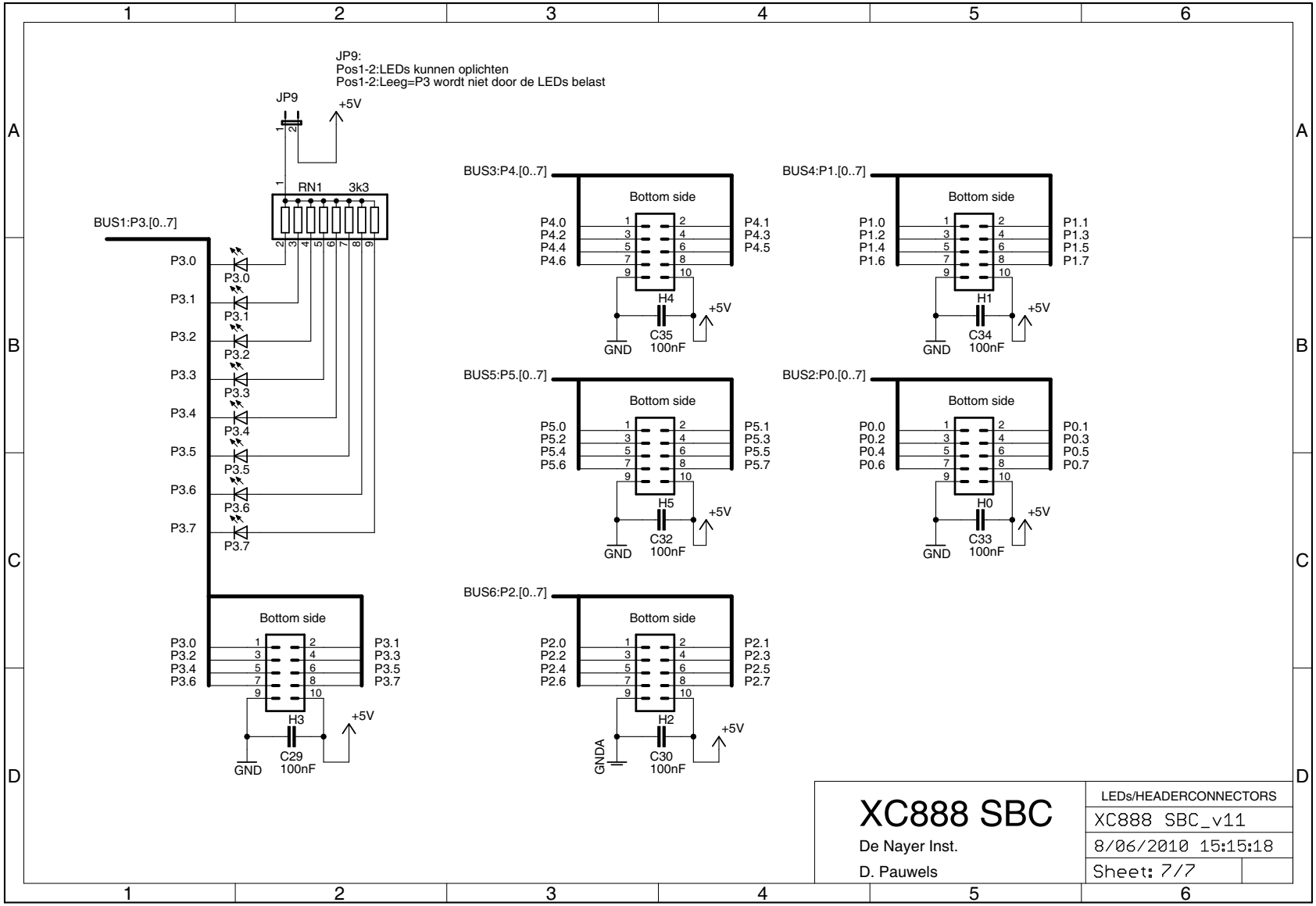

XC888 SBC

De Nayer Inst.

D. Pauwels

LEDs/HEADERCONNECTORS	
XC888 SBC_v11	
8/06/2010 15:15:18	
Sheet: 7/7	

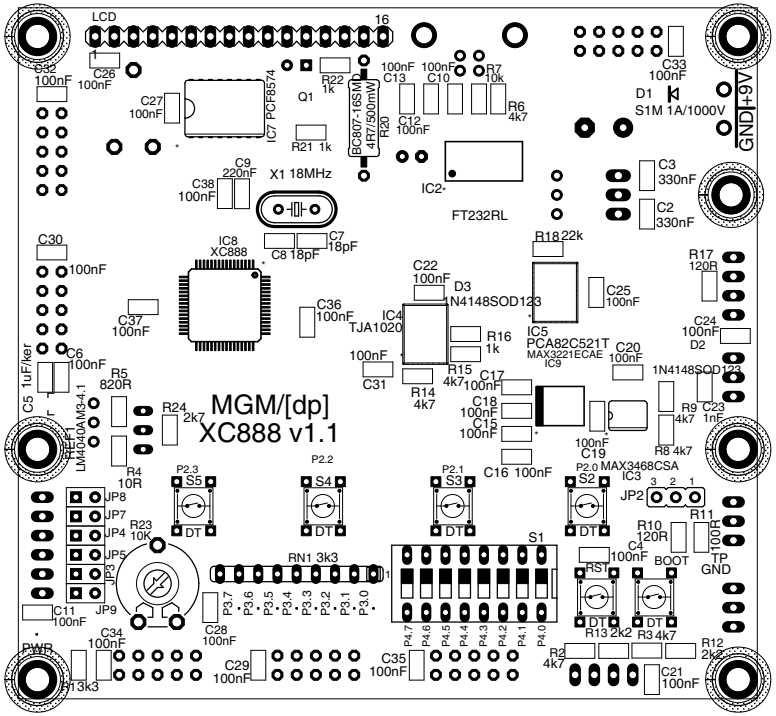
MGM/[dp]
XC888 v1.1
LCD
16
1
C32
100nF
C26
100nF
C27
100nF
IC7 PCF8574
Q1
R22
1k
R21 1k
BC807-16SMD
LR7/500mW
R20
C13
100nF
C10
100nF
R7
10k
C12
100nF
R6
4k7
C33
100nF
D1
S1M 1A/1000V
GND|+5V
C9
220nF
X1 18MHz
C38
100nF
IC2
FT232RL
C3
330nF
C2
330nF
C30
100nF
IC8
XC888
C8 18pF
C7
18pF
R18 22k
C22
100nF
D3
1N4148SOD123
C25
100nF
R17
120R
C37
100nF
C36
100nF
IC4
TJA1020
R16
1k
IC5
PCA82C521T
MAX3221ECAE
IC9
C20
100nF
C24
100nF
D2
C6
100nF
C5 1uF/ker
100nF
C31
R15
4k7
R14
4k7
C17
100nF
1N4148SOD123
R5
820R
C18
100nF
C15
100nF
R9
4k7
C23
1nF
REF1
LM4040AM3-4.1
R24
2k7
100nF
C19
R8 4k7
R4
10R
C16 100nF
MAX3468CSA
IC3
P2.3
S5
P2.2
S4
P2.1
S3
P2.0
S2
JP2
3 2 1
R11
100R
JP8
JP7
JP4
JP5
JP3
R23
10k
RN1 3k3
S1
R10
120R
C4
100nF
BOOT
TP
GND
RST
JP9
C11
100nF
C28
100nF
P3.7
P3.6
P3.5
P3.4
P3.3
P3.2
P3.1
P3.0
P4.7
P4.6
P4.5
P4.4
P4.3
P4.2
P4.1
P4.0
R13 2k2
R3 4k7
C34
100nF
C29
100nF
C35
100nF
R2
4k7
R12
2k2
C21
100nF
PWR
R1 3k3

LCD
USB
X2
J6
H0
10
1
2
C1
330uF/35V
C14
4.7uF
R19
10k
J1
3
2
1
IC1
7805T
12V+
GND
Vin+
HK15M1
CAN
22-23-2021
LIN
22-23-2021
RS485
22-23-2021
RS232
22-23-2021
I2C
22-23-2041
H4
H3
H1
IC6
LM75A
IC10
LM393Z
J10
SH
J9
J8