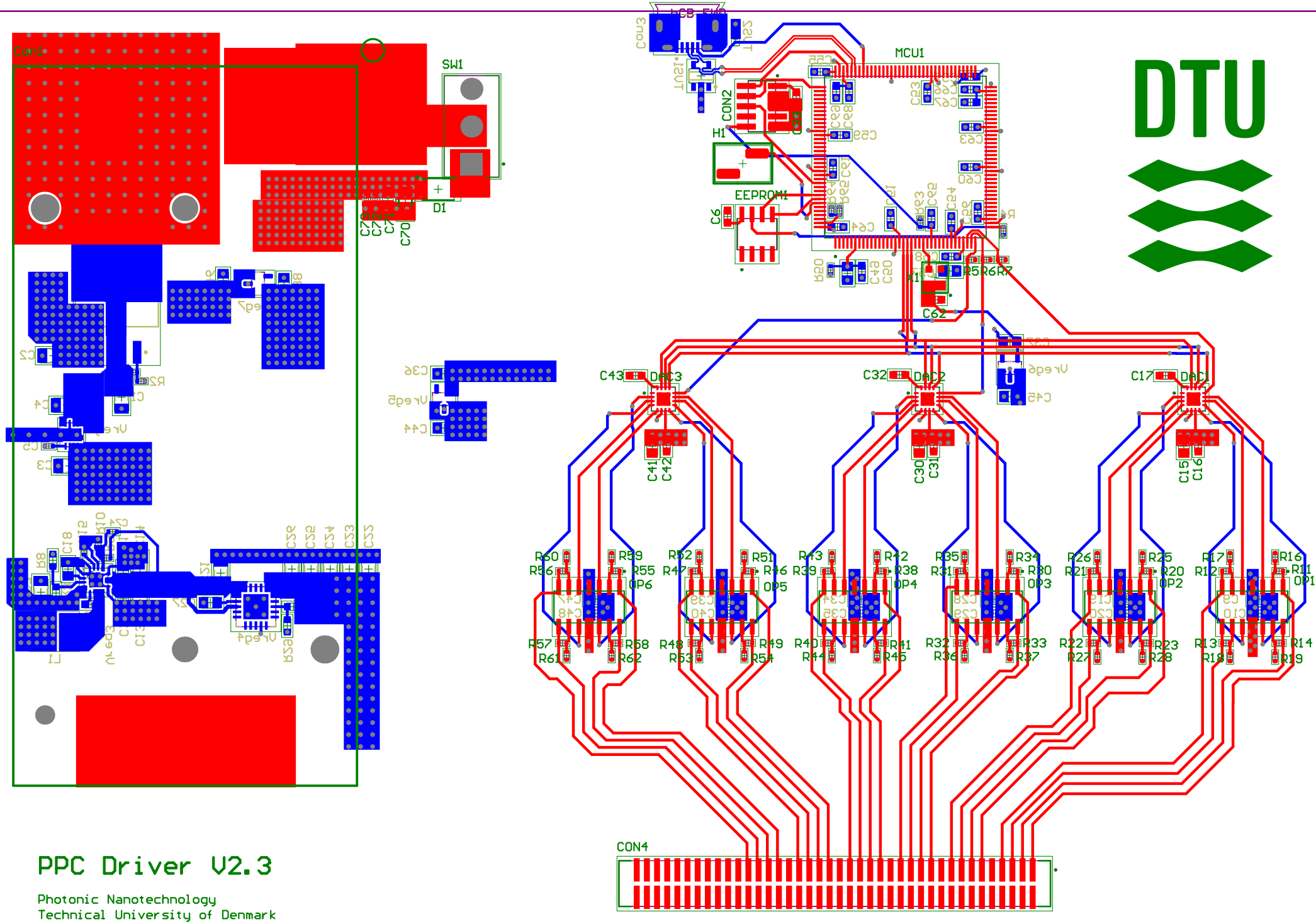
Com1
SW1
D1
MCU1
CON2
H1
EEPROM1
X1
C62
C43
DAC3
C32
DAC2
C17
DAC1
OP6
OP5
OP4
OP3
OP2
OP1
CON4
PPC Driver V2.3
Photonic Nanotechnology
Technical University of Denmark
Department of Electrical and Photonics Engineering

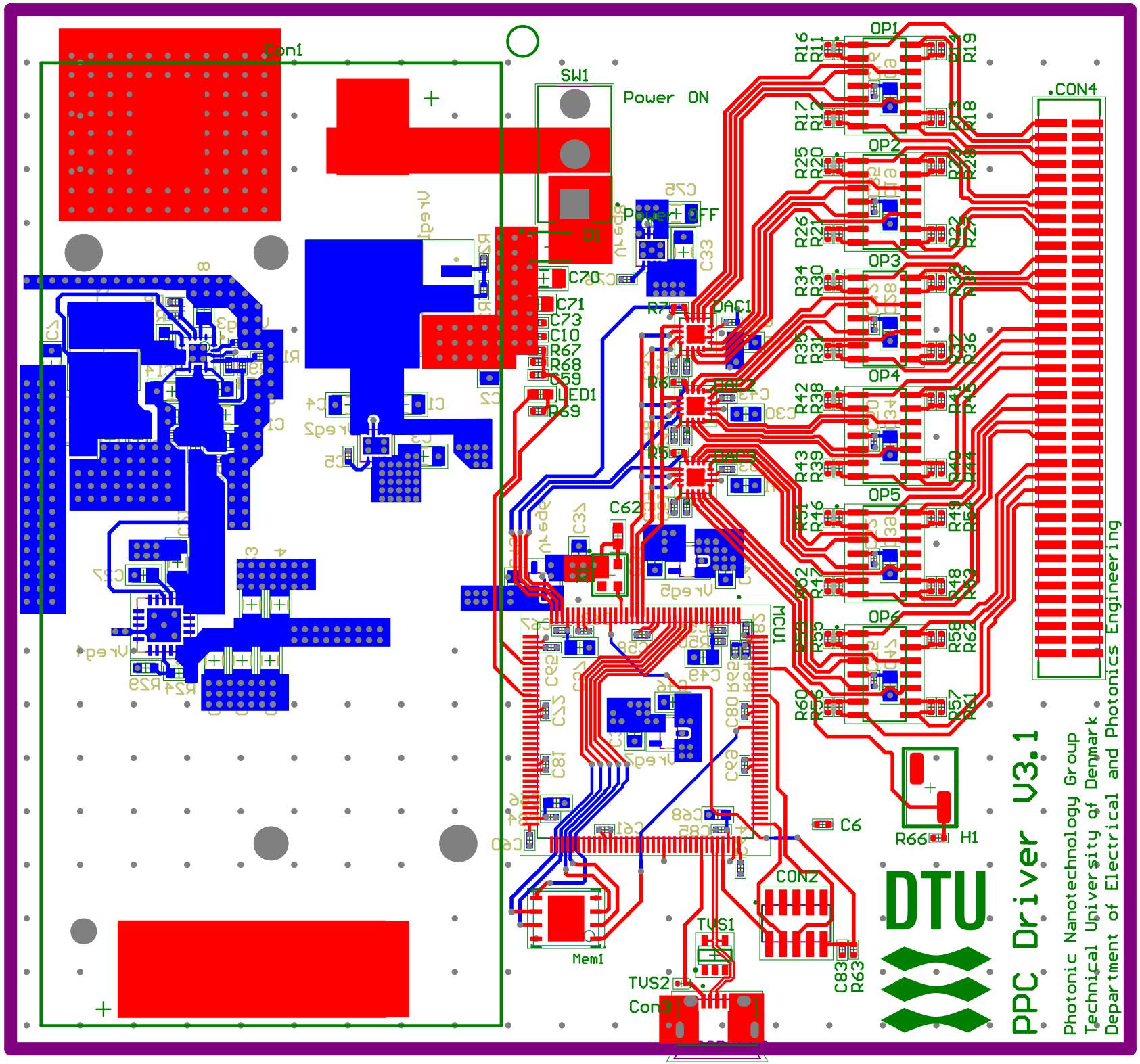

Con1
SW1
Power ON
Power OFF
D1
C70
C71
C73
C10
R67
R68
C59
LED1
R69
DAC1
DAC2
DAC3
C62
MCU1
Mem1
TVS1
TVS2
Con3
CON2
C6
R66
H1
C83
R63
OP1
OP2
OP3
OP4
OP5
OP6
CON4
DTU
PPC Driver V3.1
Photonic Nanotechnology Group
Technical University of Denmark
Department of Electrical and Photonics Engineering