Datasheet

DW01x

One Cell Lithium-ion/Polymer Battery Protection IC

FORTUNE' Properties For Reference Only

Fortune SEMICONDUCTOR CORPORATION

Fortune Semiconductor Corporation
富晶電子股份有限公司
23F., No.29-5,Sec. 2, Zhongzheng E. Rd.,
Danshui Dist, New Taipei City 251, Taiwan
Tel.：886-2-28094742
Fax：886-2-28094874
www.ic-fortune.com

FORTUNE' Properties For Reference Only

This manual contains new product information. **Fortune Semiconductor Corporation** reserves the rights to modify the product specification without further notice. No liability is assumed by **Fortune Semiconductor Corporation** as a result of the use of this product. No rights under any patent accompany the sale of the product.

1. General Description

The DW01 series battery protection IC is designed to protect lithium-ion/polymer battery from damage or degrading the lifetime due to overcharge, overdischarge, and/or overcurrent for one-cell lithium-ion/polymer battery powered systems, such as cellular phones.
The ultra-small package and less required external components make it ideal to integrate the DW01 series into the limited space of battery pack. The accurate ±50mV overcharging detection voltage ensures safe and full utilization charging. The very low standby current drains little current from the cell while in storage.

2. Features

- **Reduction in Board Size due to Miniature Package SOT-23-6.**
- **Ultra-Low Quiescent Current at 3μA (Vcc=3.9V).**
- **Ultra-Low Power-Down Current at 0.1μA or Overdischarge Current at 3.5μA (Vcc=2.0V).**
- **Precision Overcharge Protection Voltage 4.25V~4.35, accuracy of ± 50mV.**
- **0V battery change function are selectable.**
- **Power-down fuction are selectable.**
- **Load Detection Function during Overcharge Mode.**
- **Two Detection Levels for Overcurrent Protection.**
- **Delay times are generated by internal circuits. No external capacitors required.**

3. Ordering Information

DW01x-x
- Serial code form G
- Serial code form - & +
- Serial code from A to C&E、F *

PACKAGE TYPE
SOT-23-6 (Green-Package)

Refer to the product name list on the next page

4. Applications

- **Protection IC for One-Cell Lithium-Ion / Lithium-Polymer Battery Pack**

FORTUNE Properties For Reference Only

5. Product Name List

Model	Package	Overcharge detection voltage [VOCP] (V)	Overcharge release voltage [VOCR] (V)	Overdischarge detection voltage [VODP] (V)	Overdischarge release voltage [VODR] (V)	Overcurrent detection voltage [VOI1] (mV)	0V charge function	Stand by function release
DW01+G	SOT-23-6	4.300±0.050	4.100±0.050	2.40±0.100	3.0±0.100	150±30	NO	-
DW01-G	SOT-23-6	4.250±0.050	4.050±0.050	2.40±0.100	3.0±0.100	150±30	NO	-
DW01A-G	SOT-23-6	4.300±0.050	4.100±0.050	2.40±0.100	3.0±0.100	150±30	NO	AUTO recovery
DW01B-G	SOT-23-6	4.300±0.050	4.100±0.050	2.40±0.100	3.0±0.100	150±30	YES	-
DW01C-G	SOT-23-6	4.250±0.050	4.050±0.050	2.380±0.100	2.980±0.100	150±30	NO	AUTO recovery
DW01E-G	SOT-23-6	4.280±0.050	4.080±0.050	2.40±0.100	3.0±0.100	150±30	NO	AUTO recovery
DW01F-G	SOT-23-6	4.350±0.050	4.150±0.050	2.40±0.100	3.0±0.100	150±30	NO	AUTO recovery

6. Pin Configuration and Package Marking Information

Pin No.	Symbol	Description
1	OD	MOSFET gate connection pin for discharge control
2	CS	Input pin for current sense, charger detect
3	OC	MOSFET gate connection pin for charge control
4	TD	Test pin for reduce delay time
5	VCC	Power supply, through a resistor (R1)
6	GND	Ground pin

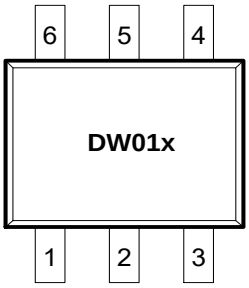

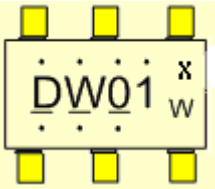

For DW01A~C & E、F
X instead of series code A ~C & E、F
Top Point：Lot No
Bottom Point：Year
w : week, A~Z & A ~ Z

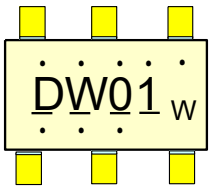

For DW01+、DW01-
Top Point：Lot No
Bottom Point：Year
w : week, A~Z & A ~ Z
For example :
DW01 (with underscore) stands for DW01+G.
DW01 (without underscore) stands for DW01-G.

FORTUNE Properties For Reference Only

7. Functional Block Diagram

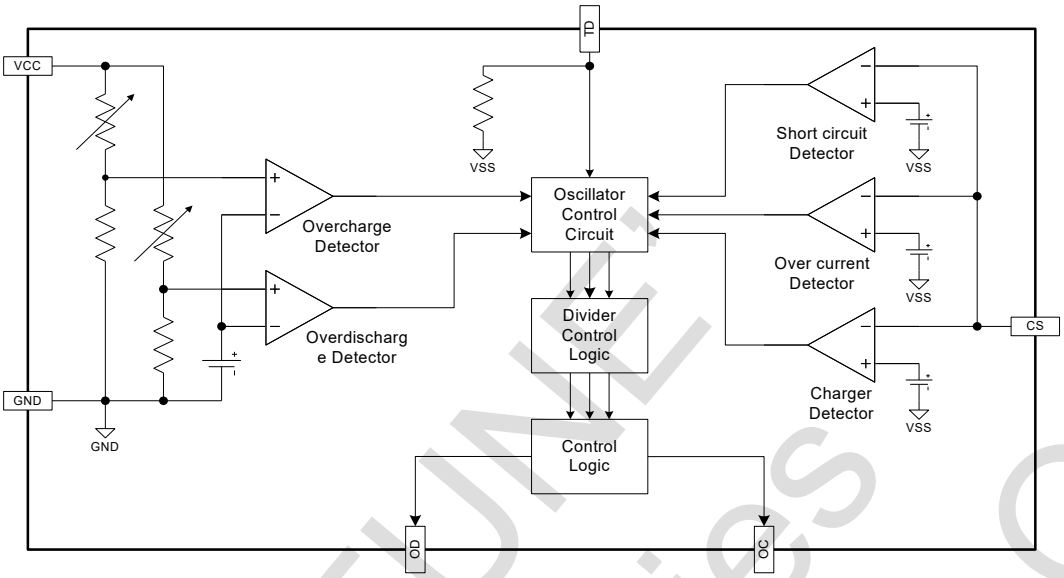

8. Typical Application Circuit

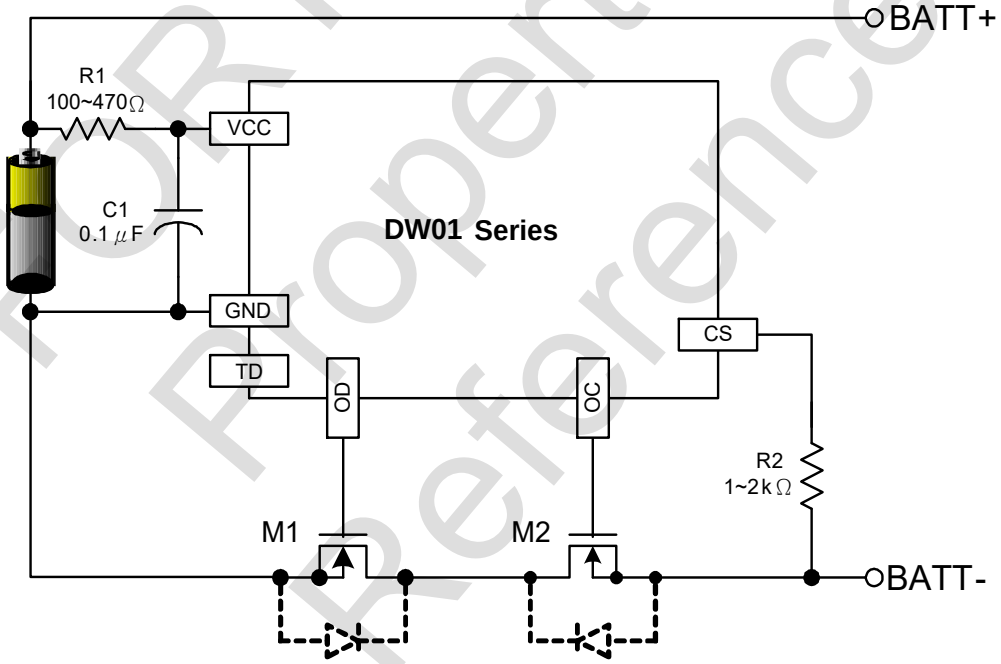

Symbol	Purpose	Recommended	Remakes
R1	ESD protection. For power fluctuation.	470Ω	Resistance should be as small as possible to avoid lowering of the overcharge detection accuracy caused by VDD pin current. Use 470Ω for better ESD protection.
C1	For power fluctuation.	0.1μF	
R2	Protection for reverse connection of a charger.	1k~2kΩ	Select a resistance as large as possible to prevent large current when a charge is connected in reverse.

FORTUNE Properties For Reference Only

9. Absolute Maximum Ratings

(GND=0V, Ta=25°C unless otherwise specified)

Item	Symbol	Rating	Unit
Input voltage between VCC and GND *	VCC	GND-0.3 to GND+10	V
OC output pin voltage	VOC	VCC -24 to VCC +0.3	V
OD output pin voltage	VOD	GND-0.3 to VCC +0.3	V
CS input pin voltage	VCS	VCC -24 to VCC +0.3	V
Operating Temperature Range	TOP	-40 to +85	°C
Storage Temperature Range	TST	-40 to +125	°C

Note: DW01series contains a circuit that will protect it from static discharge; but please take special care that no excessive static electricity or voltage which exceeds the limit of the protection circuit will be applied to it.

FORTUNE Properties For Reference Only

10. Electrical Characteristics

(Ta=25°C unless otherwise specified)

1. DW01+G

PARAMETER	TEST CONDITIONS	SYMBOL	Min	Typ	Max	UNIT
Supply Current	VCC=3.9V	ICC		3.0	6.0	μA
Power-Down Current	VCC=2.0V	IPD			0.1	μA
Overcharge Protection Voltage	DW01+	VOCP	4.25	4.30	4.35	V
Overcharge Release Voltage		VOCR	4.05	4.10	4.15	V
Overdischarge Protection Voltage		VODP	2.30	2.40	2.50	V
Overdischarge Release Voltage		VODR	2.90	3.00	3.10	V
Overcurrent Protection Voltage		VOIP（VOI1）	120	150	180	mV
Short Current Protection Voltage	VCC=3.6V	VSIP（VOI2）	1.00	1.35	1.70	V
0V Battery Charge Inhibition Battery Voltage	0V Battery Charging Unavailable	V0INH			1.5	V
Overcharge Delay Time		TOC		80	200	ms
Overdischarge Delay Time	VCC=3.6V to 2.0V	TOD		40	100	ms
Overcurrent Delay Time (1)	VCC=3.6V	TOI1		10	20	ms
Overcurrent Delay Time (2)	VCC=3.6V	TOI2		5	50	μs
Charger Detection Threshold Voltage		VCHA	-1.2	-0.7	-0.2	V
OD Pin Output “H” Voltage		VDH	VCC-0.1	VCC-0.02		V
OD Pin Output “L” Voltage		VDL		0. 1	0.5	V
OC Pin Output “H” Voltage		VCH	VCC-0.1	VCC-0.02		V
OC Pin Output “L” Voltage		VCL		0.1	0.5	V

FORTUNE Properties For Reference Only

(2)DW01-G

PARAMETER	TEST CONDITIONS	SYMBOL	Min	Typ	Max	UNIT
Supply Current	VCC=3.9V	ICC		3.0	6.0	μA
Power-Down Current	VCC=2.0V	IPD			0.1	μA
Overcharge Protection Voltage	DW01-	VOCP	4.20	4.25	4.30	V
Overcharge Release Voltage		VOCR	4.00	4.05	4.10	V
Overdischarge Protection Voltage		VODP	2.30	2.40	2.50	V
Overdischarge Release Voltage		VODR	2.90	3.00	3.10	V
Overcurrent Protection Voltage		VOIP（VOI1）	120	150	180	mV
Short Current Protection Voltage	VCC=3.6V	VSIP（VOI2）	1.00	1.35	1.70	V
0V Battery Charge Inhibition Battery Voltage	0V Battery Charging Unavailable	V0INH			1.5	V
Overcharge Delay Time		TOC		80	200	ms
Overdischarge Delay Time	VCC=3.6V to 2.0V	TOD		40	100	ms
Overcurrent Delay Time (1)	VCC=3.6V	TOI1		10	20	ms
Overcurrent Delay Time (2)	VCC=3.6V	TOI2		5	50	μs
Charger Detection Threshold Voltage		VCHA	-1.2	-0.7	-0.2	V
OD Pin Output “H” Voltage		VDH	VCC-0.1	VCC-0.02		V
OD Pin Output “L” Voltage		VDL		0. 1	0.5	V
OC Pin Output “H” Voltage		VCH	VCC-0.1	VCC-0.02		V
OC Pin Output “L” Voltage		VCL		0.1	0.5	V

FORTUNE Properties For Reference Only

(3)DW01A-G

PARAMETER	TEST CONDITIONS	SYMBOL	Min	Typ	Max	UNIT
Supply Current	VCC=3.9V	ICC		3.0	6.0	μA
Overdischarge Current	VCC=2.0V	IOD		1.5	3.5	μA
Overcharge Protection Voltage	DW01A	VOCP	4.25	4.30	4.35	V
Overcharge Release Voltage		VOCR	4.05	4.10	4.15	V
Overdischarge Protection Voltage		VODP	2.30	2.40	2.50	V
Overdischarge Release Voltage		VODR	2.90	3.00	3.10	V
Overcurrent Protection Voltage		VOIP（VOI1）	120	150	180	mV
Short Current Protection Voltage	VCC=3.6V	VSIP（VOI2）	1.00	1.35	1.70	V
0V Battery Charge Inhibition Battery Voltage	0V Battery Charging Unavailable	V0INH			1.5	V
Overcharge Delay Time		TOC		80	200	ms
Overdischarge Delay Time	VCC=3.6V to 2.0V	TOD		40	100	ms
Overcurrent Delay Time (1)	VCC=3.6V	TOI1		10	20	ms
Overcurrent Delay Time (2)	VCC=3.6V	TOI2		5	50	μs
Charger Detection Threshold Voltage		VCHA	-1.2	-0.7	-0.2	V
OD Pin Output “H” Voltage		VDH	VCC-0.1	VCC-0.02		V
OD Pin Output “L” Voltage		VDL		0. 1	0.5	V
OC Pin Output “H” Voltage		VCH	VCC-0.1	VCC-0.02		V
OC Pin Output “L” Voltage		VCL		0.1	0.5	V

FORTUNE's Properties For Reference Only

(4)DW01B-G

PARAMETER	TEST CONDITIONS	SYMBOL	Min	Typ	Max	UNIT
Supply Current	VCC=3.9V	ICC		3.0	6.0	μA
Power-Down Current	VCC=2.0V	IPD			0.1	μA
Overcharge Protection Voltage	DW01B	VOCP	4.25	4.30	4.35	V
Overcharge Release Voltage		VOCR	4.05	4.10	4.15	V
Overdischarge Protection Voltage		VODP	2.30	2.40	2.50	V
Overdischarge Release Voltage		VODR	2.90	3.00	3.10	V
Overcurrent Protection Voltage		VOIP（VOI1）	120	150	180	mV
Short Current Protection Voltage	VCC=3.6V	VSIP（VOI2）	1.00	1.35	1.70	V
0V Battery Charger Starting Charge Voltage	0V Battery Charging Available	V0CHA	1.5			V
Overcharge Delay Time		TOC		80	200	ms
Overdischarge Delay Time	VCC=3.6V to 2.0V	TOD		40	100	ms
Overcurrent Delay Time (1)	VCC=3.6V	TOI1		10	20	ms
Overcurrent Delay Time (2)	VCC=3.6V	TOI2		5	50	μs
Charger Detection Threshold Voltage		VCHA	-1.2	-0.7	-0.2	V
OD Pin Output “H” Voltage		VDH	VCC-0.1	VCC-0.02		V
OD Pin Output “L” Voltage		VDL		0. 1	0.5	V
OC Pin Output “H” Voltage		VCH	VCC-0.1	VCC-0.02		V
OC Pin Output “L” Voltage		VCL		0.1	0.5	V

Note: The V0CHA is defined as the voltage between VCC and VCS (VCC-VCS>1.5V) at which OC pin goes “H” when the voltage VCC is gradually increased to the VCC=1V and VCS=-0.5V.

FORTUNE' Properties For Reference Only

(5)DW01C-G

PARAMETER	TEST CONDITIONS	SYMBOL	Min	Typ	Max	UNIT
Supply Current	VCC=3.9V	ICC		3.0	6.0	μA
Overdischarge Current	VCC=2.0V	IOD		1.5	3.5	μA
Overcharge Protection Voltage	DW01C	VOCP	4.20	4.25	4.30	V
Overcharge Release Voltage		VOCR	4.00	4.05	4.10	V
Overdischarge Protection Voltage		VODP	2.28	2.38	2.48	V
Overdischarge Release Voltage		VODR	2.880	2.980	3.080	V
Overcurrent Protection Voltage		VOIP （VOI1）	120	150	180	mV
Short Current Protection Voltage	VCC=3.6V	VSIP （VOI2）	1.00	1.35	1.70	V
0V Battery Charge Inhibition Battery Voltage	0V Battery Charging Unavailable	V0INH			1.5	V
Overcharge Delay Time		TOC		80	200	ms
Overdischarge Delay Time	VCC=3.6V to 2.0V	TOD		40	100	ms
Overcurrent Delay Time (1)	VCC=3.6V	TOI1		10	20	ms
Overcurrent Delay Time (2)	VCC=3.6V	TOI2		5	50	μs
Charger Detection Threshold Voltage		VCHA	-1.2	-0.7	-0.2	V
OD Pin Output “H” Voltage		VDH	VCC-0.1	VCC-0.02		V
OD Pin Output “L” Voltage		VDL		0. 1	0.5	V
OC Pin Output “H” Voltage		VCH	VCC-0.1	VCC-0.02		V
OC Pin Output “L” Voltage		VCL		0.1	0.5	V

FORTUNE Properties For Reference Only

(6)DW01E-G

PARAMETER	TEST CONDITIONS	SYMBOL	Min	Typ	Max	UNIT
Supply Current	VCC=3.9V	ICC		3.0	6.0	μA
Overdischarge Current	VCC=2.0V	IOD		1.5	3.5	μA
Overcharge Protection Voltage	DW01E	VOCP	4.23	4.28	4.33	V
Overcharge Release Voltage		VOCR	4.03	4.08	4.13	V
Overdischarge Protection Voltage		VODP	2.30	2.40	2.50	V
Overdischarge Release Voltage		VODR	2.90	3.00	3.10	V
Overcurrent Protection Voltage		VOIP （VOI1）	120	150	180	mV
Short Current Protection Voltage	VCC=3.6V	VSIP （VOI2）	1.00	1.35	1.70	V
0V Battery Charge Inhibition Battery Voltage	0V Battery Charging Unavailable	V0INH			1.5	V
Overcharge Delay Time		TOC		80	200	ms
Overdischarge Delay Time	VCC=3.6V to 2.0V	TOD		40	100	ms
Overcurrent Delay Time (1)	VCC=3.6V	TOI1		10	20	ms
Overcurrent Delay Time (2)	VCC=3.6V	TOI2		5	50	μs
Charger Detection Threshold Voltage		VCHA	-1.2	-0.7	-0.2	V
OD Pin Output “H” Voltage		VDH	VCC-0.1	VCC-0.02		V
OD Pin Output “L” Voltage		VDL		0. 1	0.5	V
OC Pin Output “H” Voltage		VCH	VCC-0.1	VCC-0.02		V
OC Pin Output “L” Voltage		VCL		0.1	0.5	V

FORTUNE Properties For Reference Only

(7)DW01F-G

PARAMETER	TEST CONDITIONS	SYMBOL	Min	Typ	Max	UNIT
Supply Current	VCC=3.9V	ICC		3.0	6.0	μA
Overdischarge Current	VCC=2.0V	IOD		1.5	3.5	μA
Overcharge Protection Voltage	DW01F	VOCP	4.30	4.35	4.40	V
Overcharge Release Voltage		VOCR	4.10	4.15	4.20	V
Overdischarge Protection Voltage		VODP	2.30	2.40	2.50	V
Overdischarge Release Voltage		VODR	2.90	3.00	3.10	V
Overcurrent Protection Voltage		VOIP （VOI1）	120	150	180	mV
Short Current Protection Voltage	VCC=3.6V	VSIP （VOI2）	1.00	1.35	1.70	V
0V Battery Charge Inhibition Battery Voltage	0V Battery Charging Unavailable	V0INH			1.5	V
Overcharge Delay Time		TOC		80	200	ms
Overdischarge Delay Time	VCC=3.6V to 2.0V	TOD		40	100	ms
Overcurrent Delay Time (1)	VCC=3.6V	TOI1		10	20	ms
Overcurrent Delay Time (2)	VCC=3.6V	TOI2		5	50	μs
Charger Detection Threshold Voltage		VCHA	-1.2	-0.7	-0.2	V
OD Pin Output “H” Voltage		VDH	VCC-0.1	VCC-0.02		V
OD Pin Output “L” Voltage		VDL		0. 1	0.5	V
OC Pin Output “H” Voltage		VCH	VCC-0.1	VCC-0.02		V
OC Pin Output “L” Voltage		VCL		0.1	0.5	V

FORTUNE's Properties For Reference Only

11. Description of Operation

Normal Condition

If VODP<VCC<VOCP and VCHA<VCS<VOI1, M1 and M2 are both turned on. The charging and discharging processes can be operated normally.

Overcharge Protection

When the voltage of the battery cell exceeds the overcharge protection voltage (VOCP) beyond the overcharge delay time (TOC) period, charging is inhibited by turning off of the charge control MOSFET. The overcharge condition is released in two cases:

The voltage of the battery cell becomes lower than the overcharge release voltage (VOCR) through self-discharge.

The voltage of the battery cell falls below the overcharge protection voltage (VOCP) and a load is connected.
When the battery voltage is above VOCP, the overcharge condition will not release even a load is connected to the pack.

Overdischarge Protection

When the voltage of the battery cell goes below the overdischarge protection voltage (VODP) beyond the overdischarge delay time (TOD) period, discharging is inhibited by turning off the discharge control MOSFET.

The default of overdischarge delay time is 40ms. Inhibition of discharging is immediately released when the voltage of the battery cell becomes higher than overdischarge release voltage (VODR) through charging.

Overcurrent Protection

In normal mode, the DW01 series continuously monitors the discharge current by sensing the voltage of CS pin. If the voltage of CS pin exceeds the overcurrent protection voltage (VOIP) beyond the overcurrent delay time (TOI1) period, the overcurrent protection circuit operates and discharging is inhibited by turning off the discharge control MOSFET. The overcurrent condition returns to the normal mode when the load is released or the impedance between BATT+ and BATT- is larger than 500kΩ. The DW01 series provides two overcurrent detection levels (0.15V and 1.35V) with two overcurrent delay time (TOI1 and TOI2) corresponding to each overcurrent detection level.

Charge Detection After Overdischarge

When overdischarge occurs, the discharge control MOSFET turns off and discharging is inhibited. However, charging is still permitted through the parasitic diode of MOSFET. Once the charger is connected to the battery pack, the DW01series immediately turns on all the timing generation and detection circuitry. Charging progress is sensed if the voltage between CS and GND is below charge detection threshold voltage (VCHA).

Auto Power Down Recovery

The IC (DW01A-G、DW01C-G & DW01E-G、DW01F-G) continues to operate even after the overdischarge state has been entered. The battery voltage rising to the overdischarge release voltage(VODR) or higher is the only required condition for the IC to return to the normal state

Power-Down After Overdischarge

When overdischarge occurs ,the IC (DW01+G, DW01-G, DW01B-G) will enter into power-down mode, turning off all the timing generation and detection circuitry to reduce the quiescent current to 0.1μA (VCC=2.0V). At the same time, the CS pin is pull-up to VCC through an internal resistor.

Note: When a battery is connected for the first time, it may not enter the normal condition (dischargeable may not be enabled). In this case, short the CS and VSS pins or connect to a charger to restore to the normal condition.

FORTUNE Properties For Reference Only

12. Design Guide

Selection of External Control MOSFET

Because the overcurrent protection voltage is preset, the threshold current for overcurrent detection is determined by the turn-on resistance of the charge and discharge control MOSFETs. The turn-on resistance of the external control MOSFETs can be determined by the equation: RON=VOIP/ (2 x IT) (IT is the overcurrent threshold current). For example, if the overcurrent threshold current IT is designed to be 3A, the turn-on resistance of the external control MOSFET must be 25mΩ. Be aware that turn-on resistance of the MOSFET changes with temperature variation due to heat dissipation. It changes with the voltage between gate and source as well. (Turn-on resistance of MOSFET increases as the voltage between gate and source decreases). As the turn-on resistance of the external MOSFET changes, the design of the overcurrent threshold current changes accordingly.

Suppressing the Ripple and Disturbance from Charger

To suppress the ripple and disturbance from charger, connecting R1 and C1 to VCC is recommended.

Protection the CS pin

R2 is used for latch-up protection when charger is connected under overdischarge condition and overstress protection at reverse connecting of a charger.

FORTUNE Properties For Reference Only

13. Timing Diagram

Overcharge Condition →Load Discharging → Normal Condition

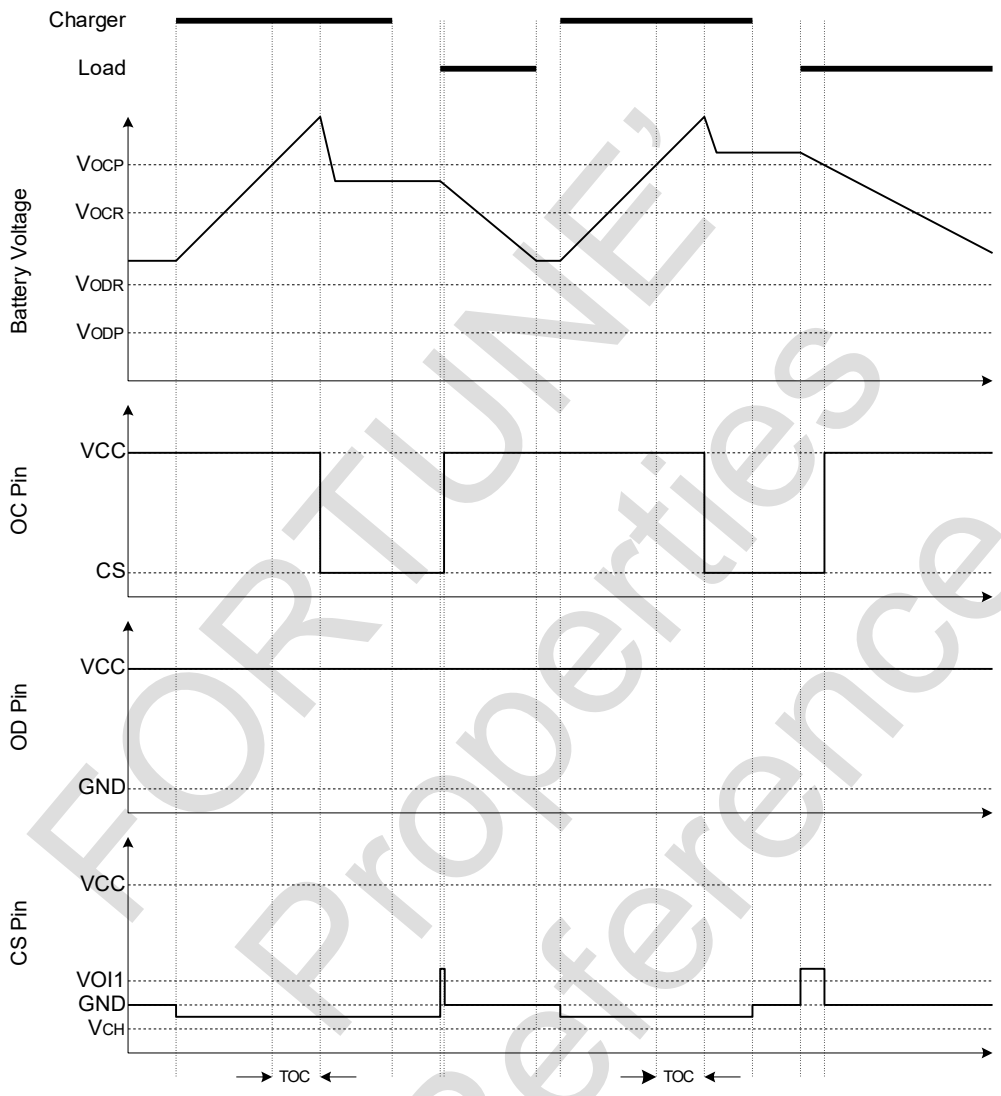

FORTUNE' Properties For Reference Only

Overdischarge Condition → Charging by a Charger →Normal Condition

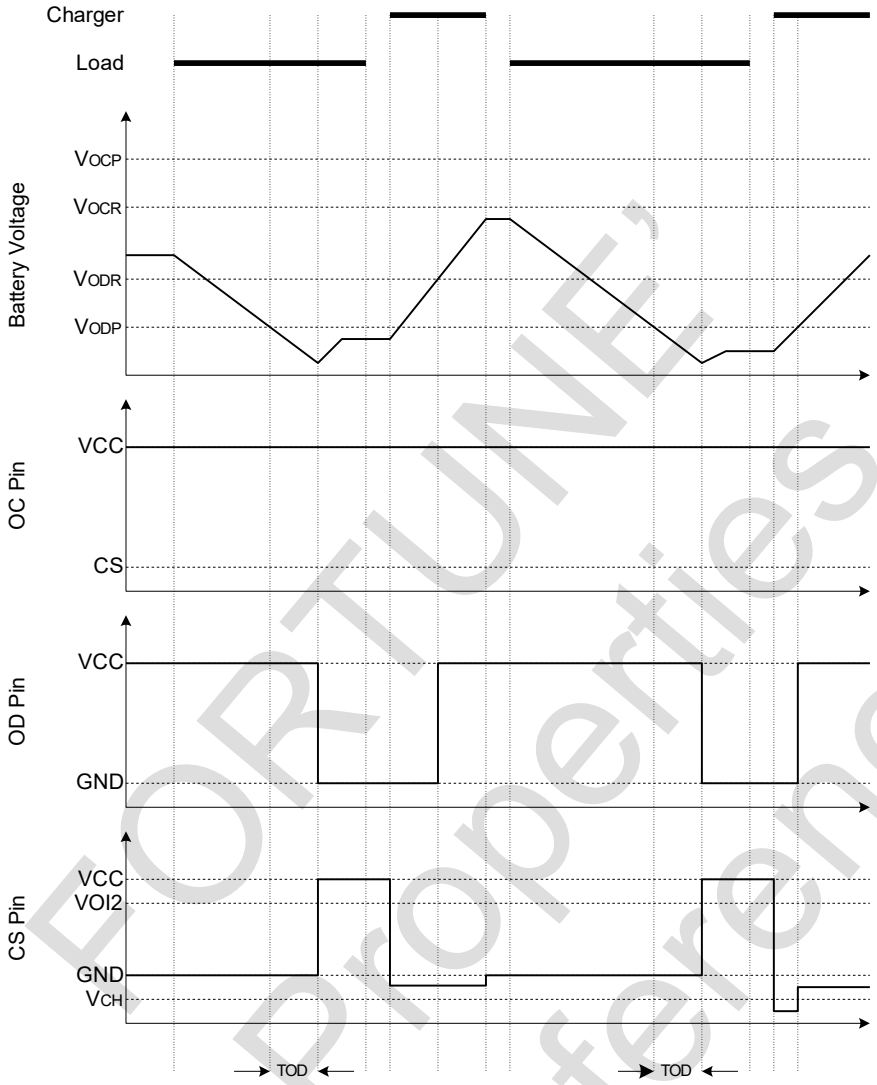

FORTUNE' Properties For Reference Only

Over Current Condition → Normal Condition

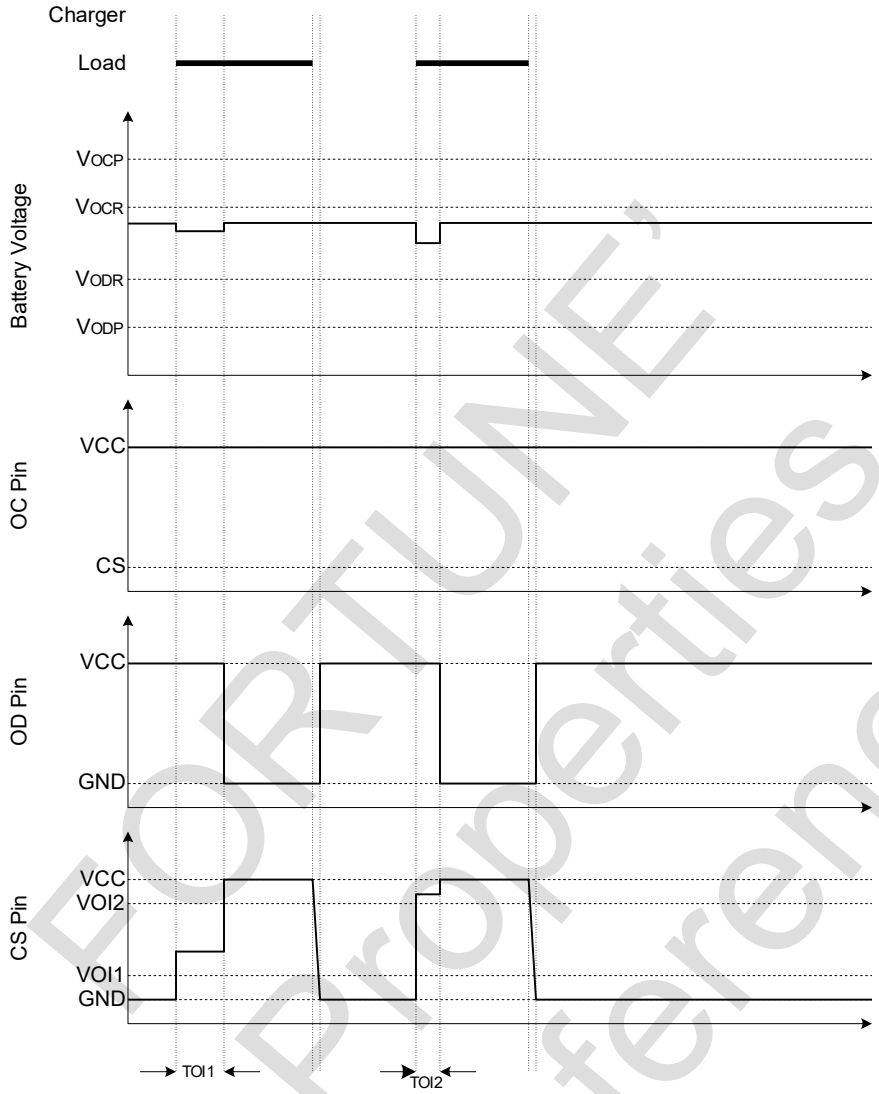

FORTUNE' Properties For Reference Only

14. Package Outline

Dimension

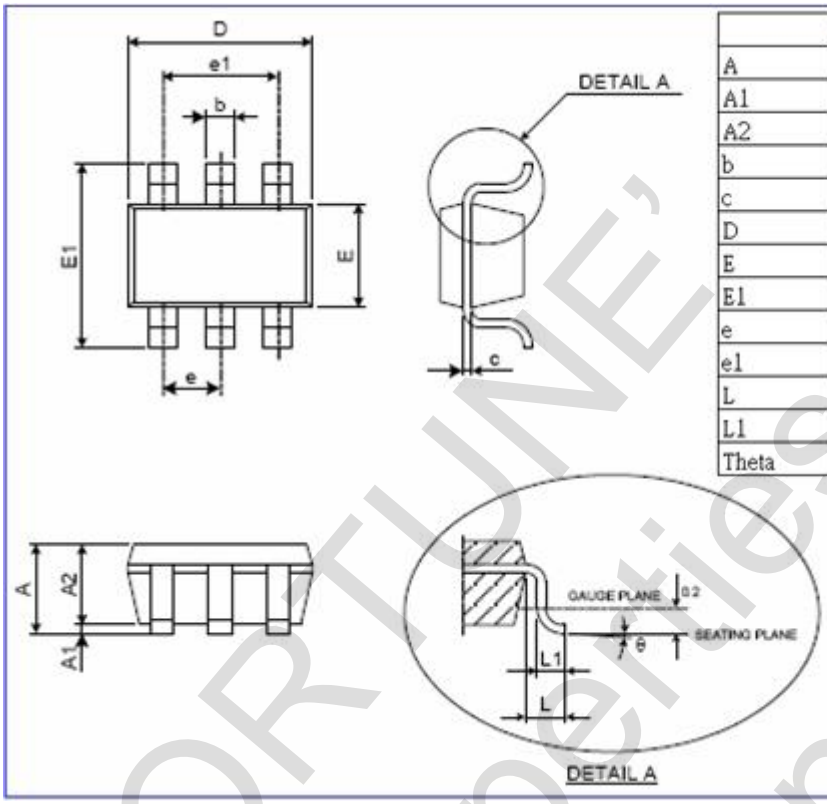

	Min.	TYP.	Max.
A	-	-	1.45
A1	0	-	0.15
A2	0.90	1.15	1.30
b	0.30	-	0.50
c	0.08	-	0.22
D	2.75	2.90	3.05
E	1.45	1.60	1.75
E1	2.60	2.80	3.00
e	0.95 BSC		
e1	1.90 BSC		
L	0.60 REF		
L1	0.30	0.45	0.60
Theta	0	4	8

15. Revision History

Version	Date	Page	Description
1.0	2011/08/29	ALL	New release
1.1	2011/10/25	7,10,12	Add DW01+, DW01A, DW01C 0V Charging prohibit
1.2	2011/12/29	4 4 4 7,8,10,12 9,11 10,12	Revise Package Marking Information Remove Product Name List DW01D-G Revise Product Name List 0V change function Revise 0V Battery Charge Inhibition Battery Voltage Information Revise 0V Battery Charger Starting Charge Voltage Information Revise max IOD=3.5uA
1.3	2012/02/06	3,4,13,14	Add DW01E-G Specified
1.4	2012/05/10	4,9,14 9 13	Revise DW01-P Specified Add V0CHA Explain Revise VOCP test conditions
1.5	2012/08/03	4	Remove Product Name List DW01-P
1.6	2012/09/28	3,4,13,14	Add DW01F-G Specified
1.7	2014/05/22	2	Revise company address
1.8	2022/05/23	4	Revise –G/+G code marking information

FORTUNE' Properties For Reference Only