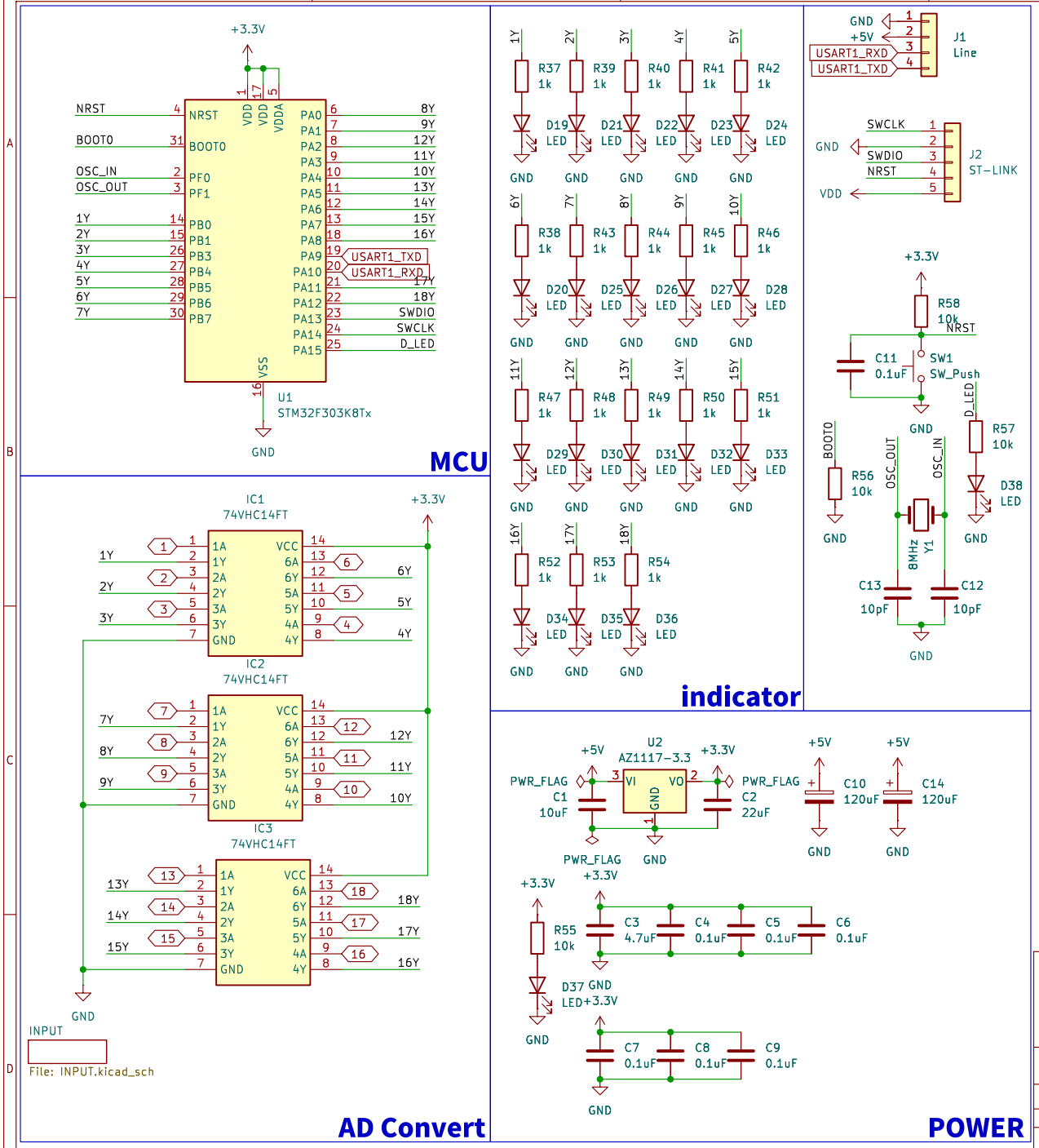

yukuyuku4123

Sheet: /

File: Line.kicad_sch

Title: MCU

Size: A4	Date: 2024-07-13	Rev: 1.0
KiCad E.D.A. 8.0.1		Id: 1/2