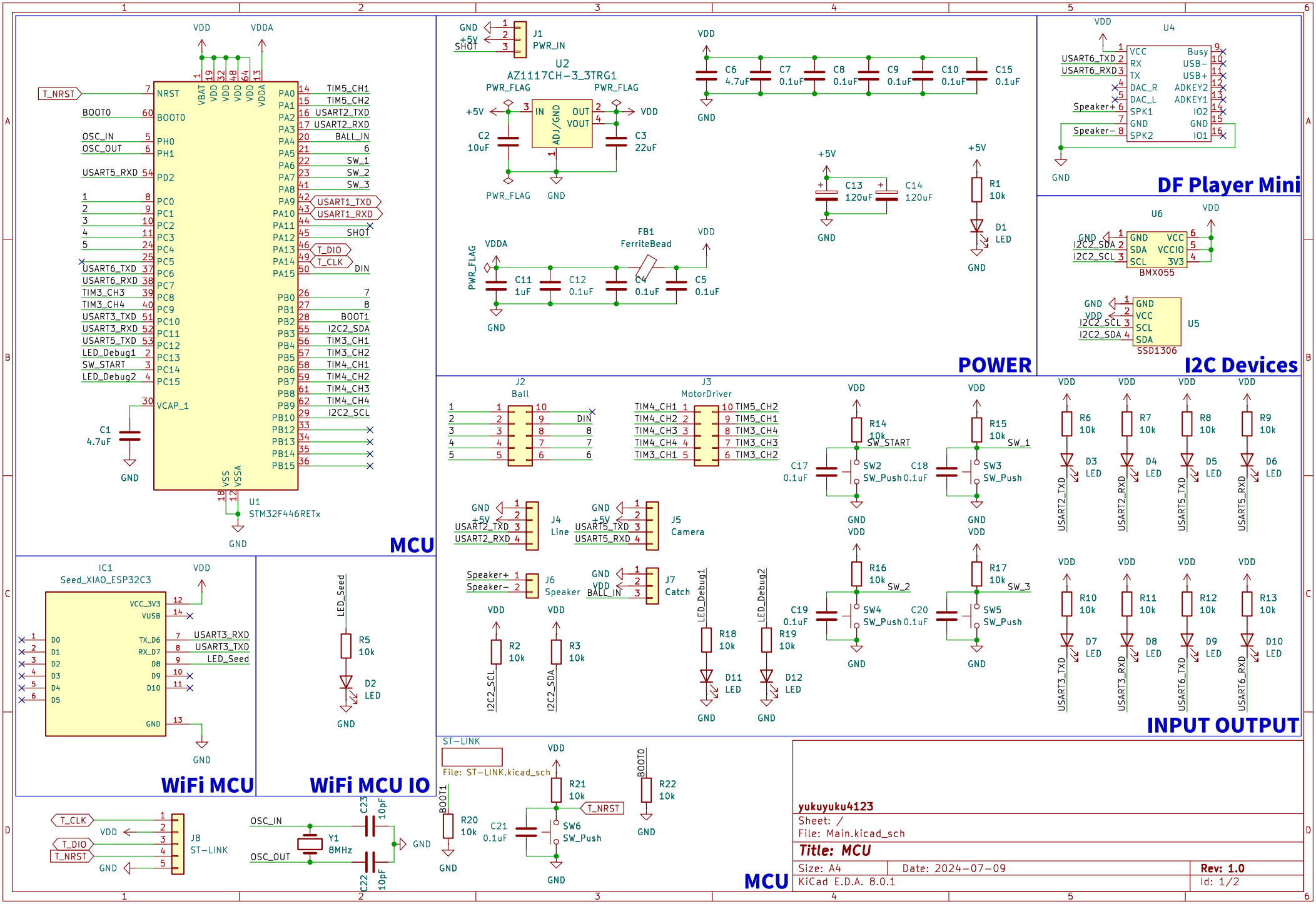
MCU
U1
STM32F446RETx
T_NRST
BOOT0
OSC_IN
OSC_OUT
USART5_RXD
USART6_TXD
USART6_RXD
TIM3_CH3
TIM3_CH4
USART3_TXD
USART3_RXD
USART5_TXD
LED_Debug1
SW_START
LED_Debug2
TIM5_CH1
TIM5_CH2
USART2_TXD
USART2_RXD
BALL_IN
SW_1
SW_2
SW_3
USART1_TXD
USART1_RXD
SHOT
T_DIO
T_CLK
DIN
BOOT1
I2C2_SDA
I2C2_SCL
TIM4_CH1
TIM4_CH2
TIM4_CH3
TIM4_CH4
POWER
J1
PWR_IN
U2
AZ1117CH-3_3TRG1
PWR_FLAG
FB1
FerriteBead
DF Player Mini
U4
Speaker+
Speaker-
I2C Devices
U6
BMX055
U5
SSD1306
INPUT OUTPUT
J2
Ball
J3
MotorDriver
J4
Line
J5
Camera
J6
Speaker
J7
Catch
WiFi MCU
IC1
Seed_XIAO_ESP32C3
WiFi MCU IO
LED_Seed
J8
ST-LINK
Y1
8MHz
MCU
ST-LINK
File: ST-LINK.kicad_sch
yukuyuku4123
Sheet: /
File: Main.kicad_sch
Title: MCU
Size: A4
Date: 2024-07-09
Rev: 1.0
KiCad E.D.A. 8.0.1
Id: 1/2

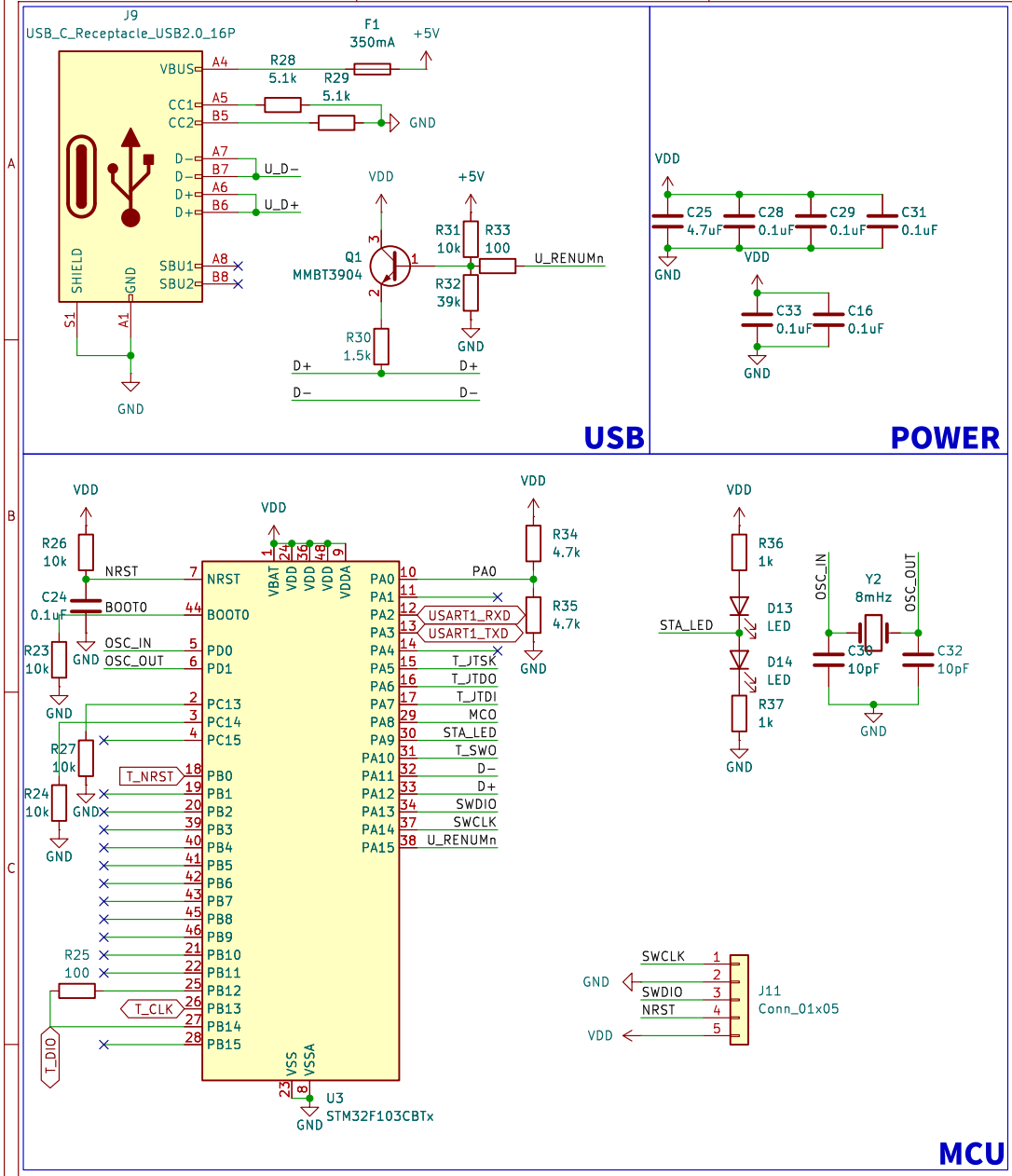

yukuyuku4123

Sheet: /ST−LINK/

File: ST−LINK.kicad_sch

Title: ST−LINK

Size: A4	Date: 2024−07−11	Rev:
KiCad E.D.A. 8.0.1		Id: 2/2