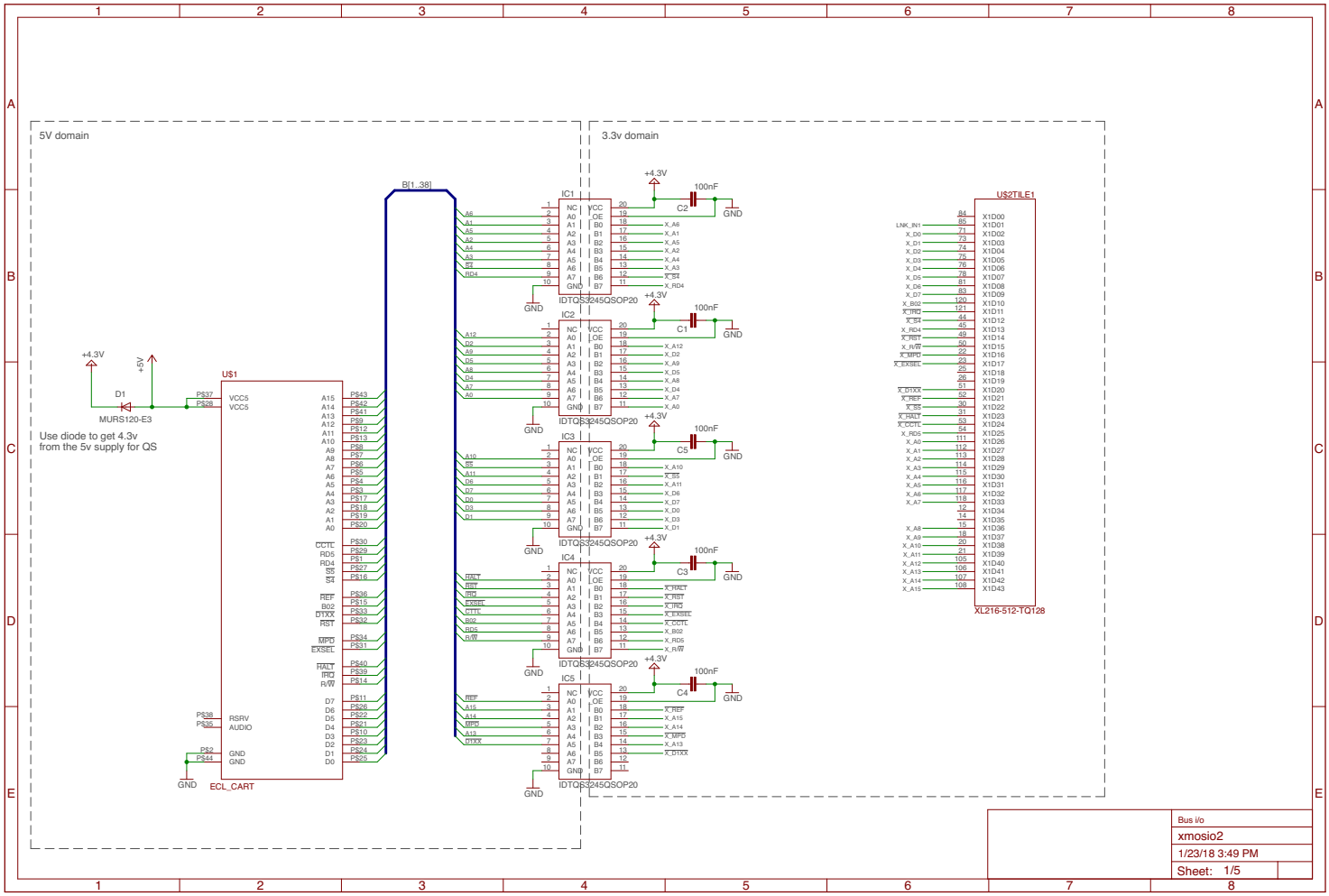
5V domain
3.3v domain
Use diode to get 4.3v
from the 5v supply for QS
MURS120-E3
US1
ECL_CART
B[1..38]
IC1
IC2
IC3
IC4
IC5
IDTQS3245QSOP20
100nF
US2TILE1
XL216-512-TQ128
Bus i/o
xmosio2
1/23/18 3:49 PM
Sheet: 1/5

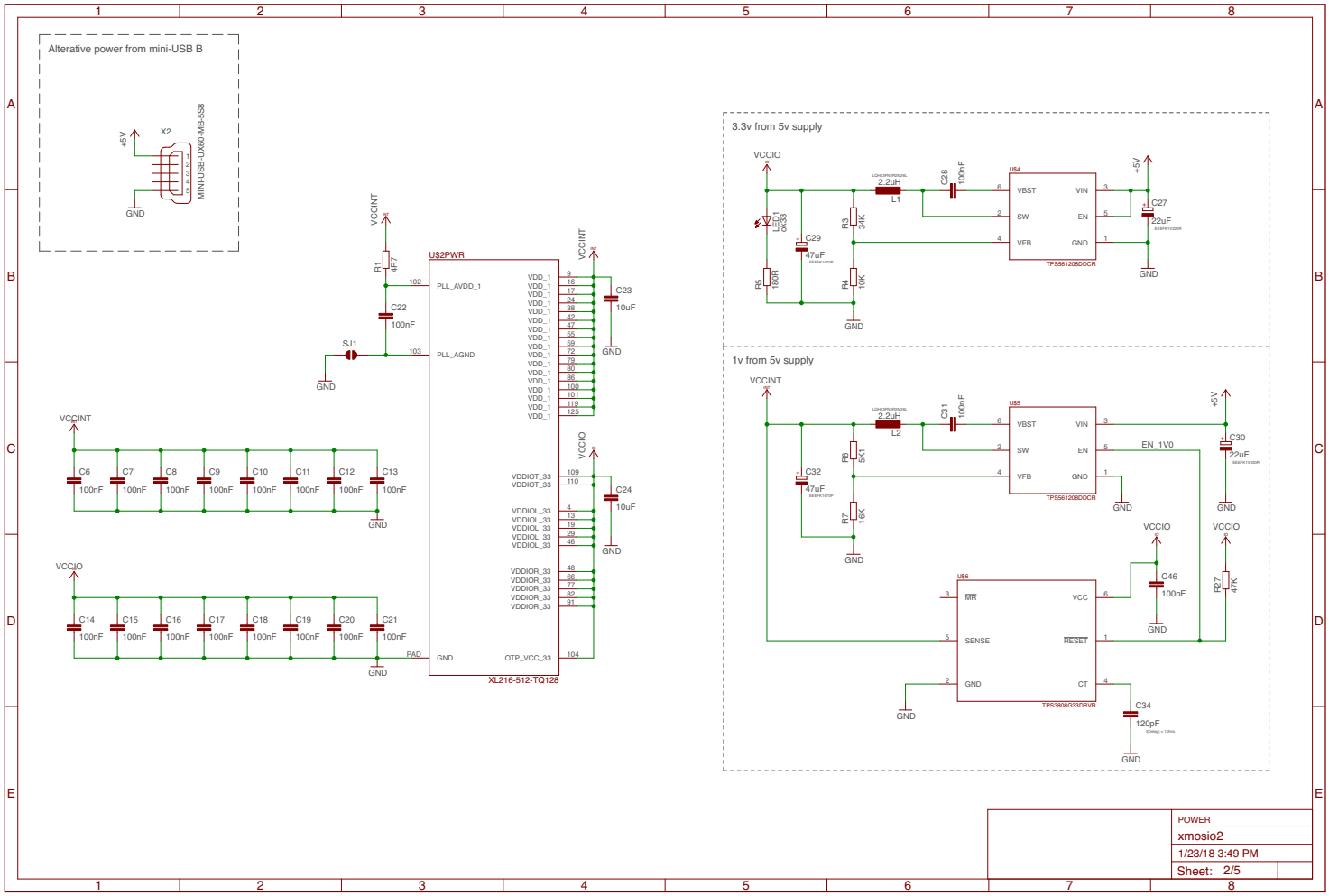

POWER	
xmosio2	
1/23/18 3:49 PM	
Sheet: 2/5	

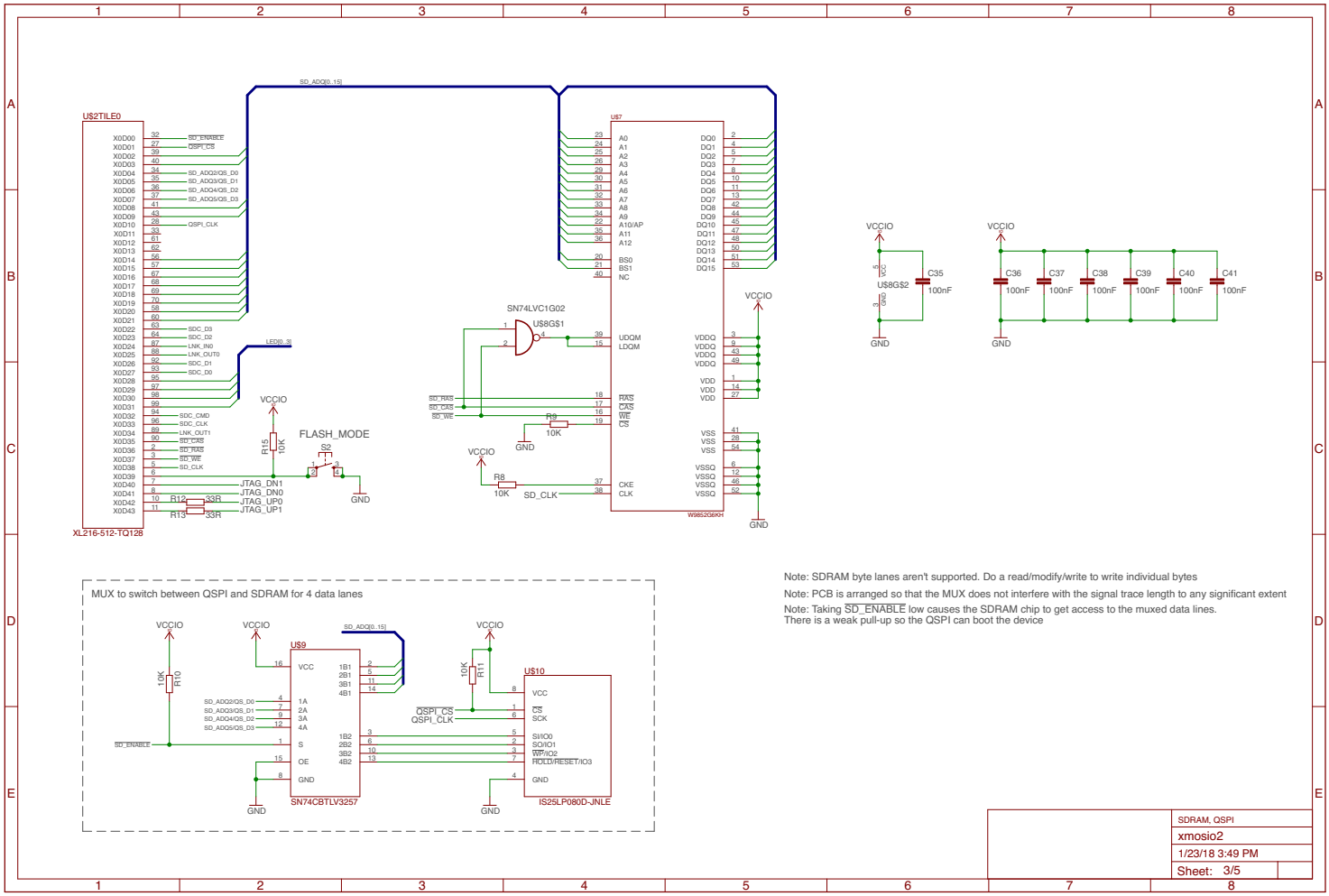

MUX to switch between QSPI and SDRAM for 4 data lanes

Note: SDRAM byte lanes aren't supported. Do a read/modify/write to write individual bytes

Note: PCB is arranged so that the MUX does not interfere with the signal trace length to any significant extent

Note: Taking $\overline{\text{SD_ENABLE}}$ low causes the SDRAM chip to get access to the muxed data lines.
There is a weak pull-up so the QSPI can boot the device

SDRAM, QSPI	
xmosio2	
1/23/18 3:49 PM	
Sheet: 3/5	

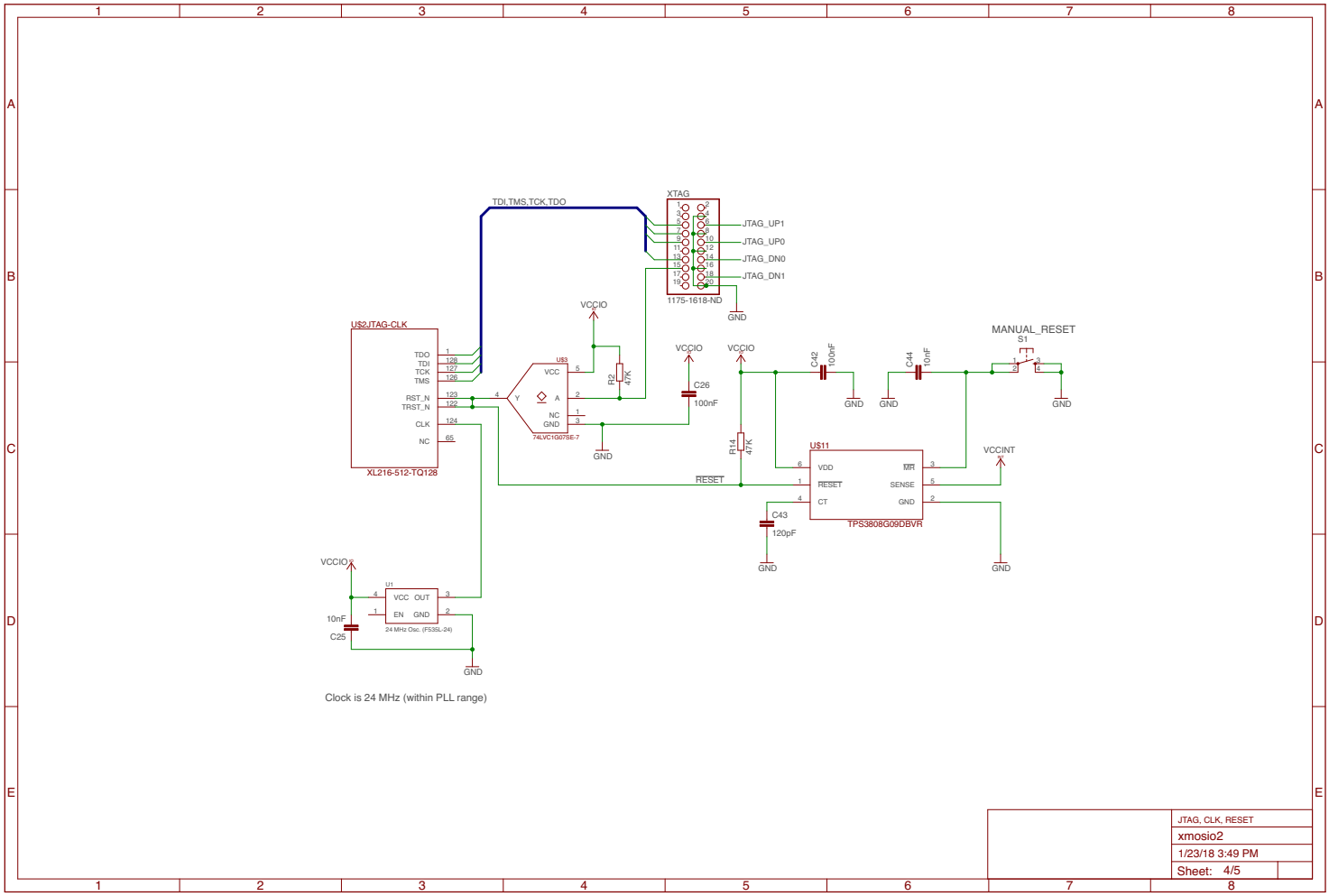
TDI,TMS,TCK,TDO
XTAG
JTAG_UP1
JTAG_UP0
JTAG_DN0
JTAG_DN1
1175-1618-ND
GND
VCCIO
U$2JTAG-CLK
TDO
TDI
TCK
TMS
RST_N
TRST_N
CLK
NC
XL216-512-TQ128
U$3
VCC
A
Y
NC
GND
74LVC1G07SE-7
R2
47K
C26
100nF
R14
47K
C42
100nF
C44
10nF
MANUAL_RESET
S1
U$11
VDD
RESET
CT
MR
SENSE
GND
TPS3808G09DBVR
VCCINT
RESET
C43
120pF
U1
VCC
OUT
EN
GND
24 MHz Osc. (FS35L-24)
10nF
C25
Clock is 24 MHz (within PLL range)
JTAG, CLK, RESET
xmosio2
1/23/18 3:49 PM
Sheet: 4/5

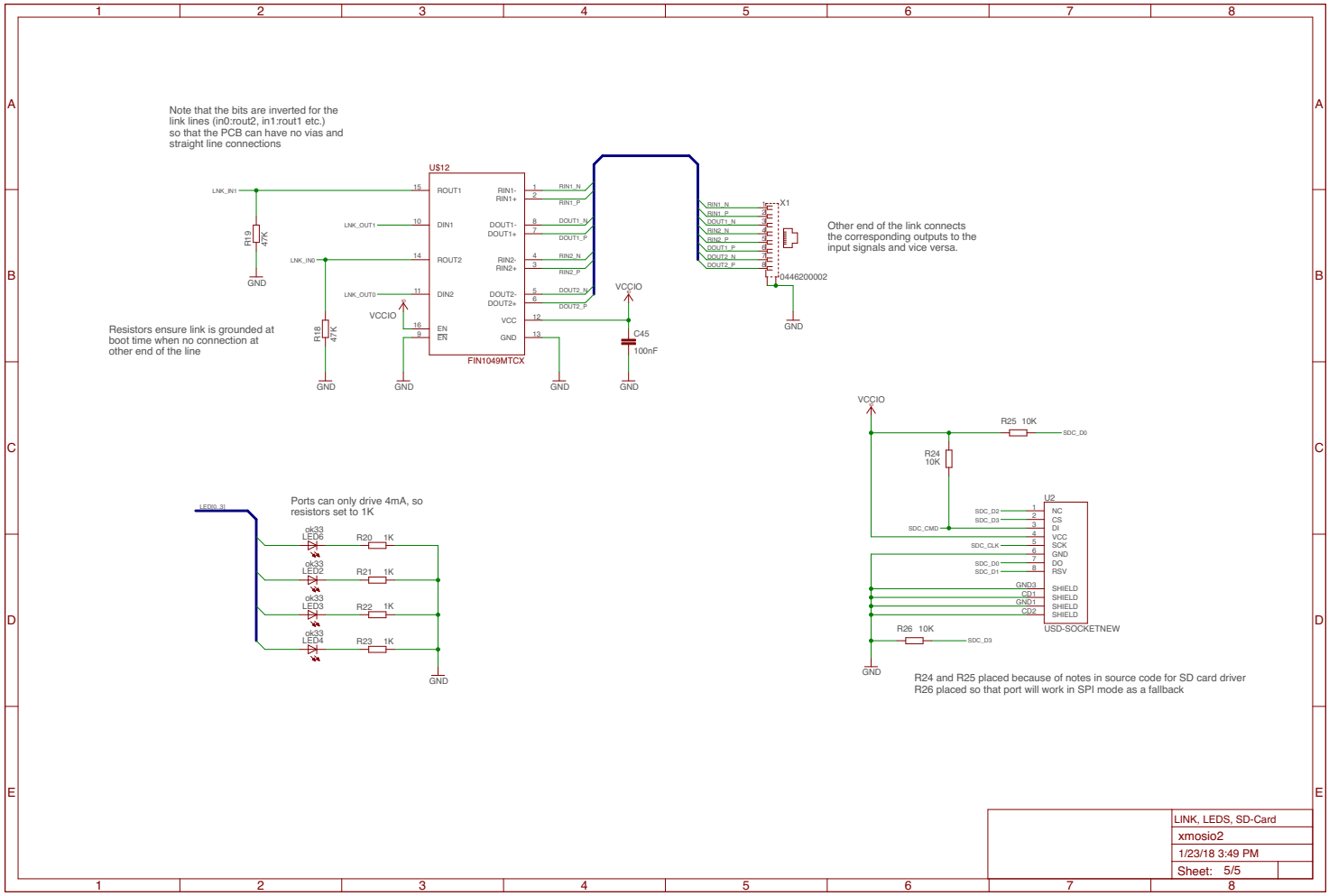
Note that the bits are inverted for the link lines (in0:rout2, in1:rout1 etc.) so that the PCB can have no vias and straight line connections
U$12
FIN1049MTCX
ROUT1
DIN1
ROUT2
DIN2
EN
VCC
GND
RIN1-
RIN1+
DOUT1-
DOUT1+
RIN2-
RIN2+
DOUT2-
DOUT2+
LNK_IN1
LNK_OUT1
LNK_IN0
LNK_OUT0
R19 47K
R18 47K
VCCIO
GND
C45 100nF
X1
0446200002
Other end of the link connects the corresponding outputs to the input signals and vice versa.
Resistors ensure link is grounded at boot time when no connection at other end of the line
LED[0..3]
Ports can only drive 4mA, so resistors set to 1K
ok33 LED6
ok33 LED2
ok33 LED3
ok33 LED4
R20 1K
R21 1K
R22 1K
R23 1K
R25 10K
R24 10K
R26 10K
SDC_D0
SDC_D2
SDC_D3
SDC_CMD
SDC_CLK
SDC_D1
U2
NC
CS
DI
VCC
SCK
GND
DO
RSV
GND3
CD1
GND1
CD2
SHIELD
USD-SOCKETNEW
R24 and R25 placed because of notes in source code for SD card driver
R26 placed so that port will work in SPI mode as a fallback
LINK, LEDS, SD-Card
xmosio2
1/23/18 3:49 PM
Sheet: 5/5