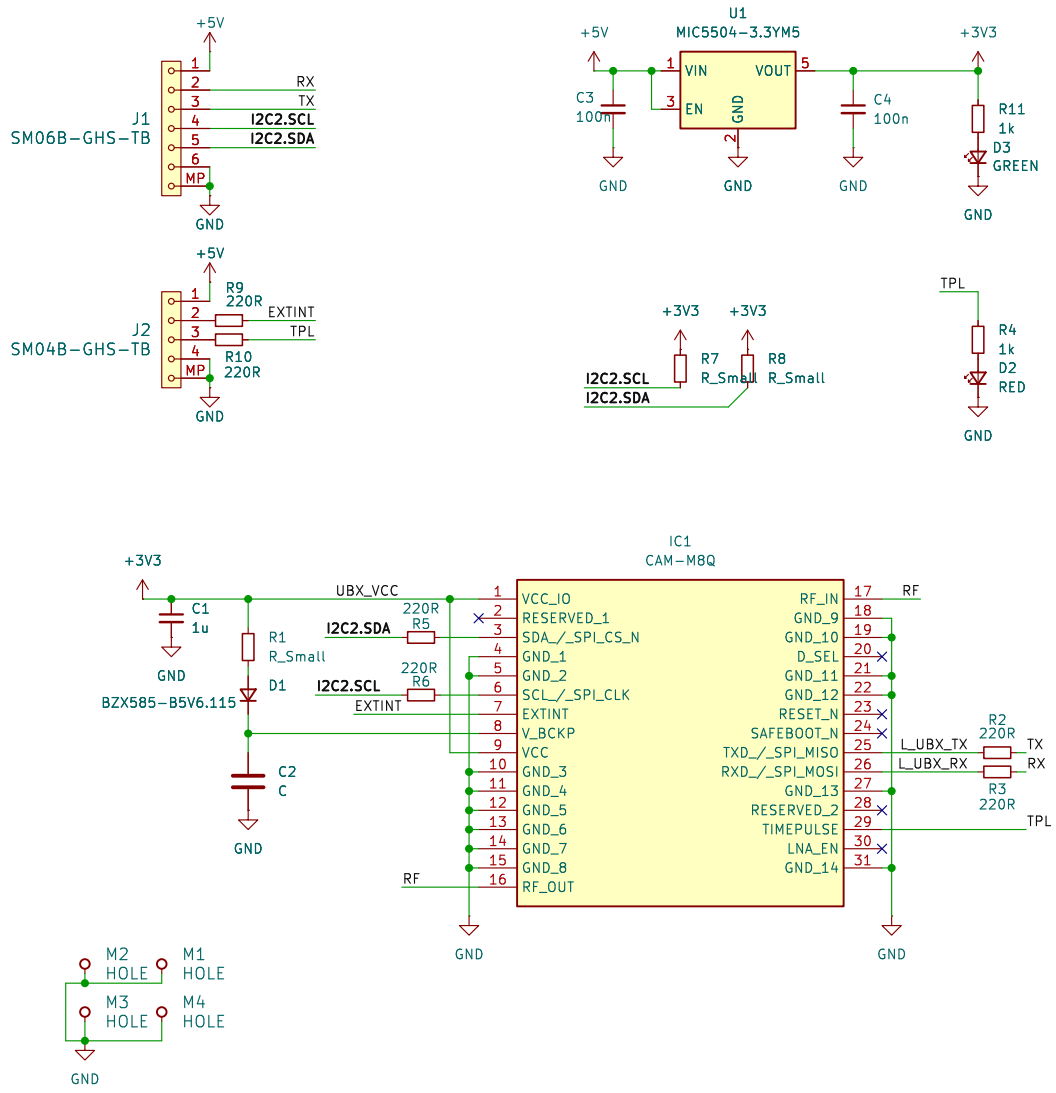


Sheet: /
File: TFGPSLITE01.kicad_sch

**Title:**

| Size: A4 | Date: | Rev: |
|---|---|---|
| KiCad E.D.A. 8.0.4 | | Id: 1/1 |