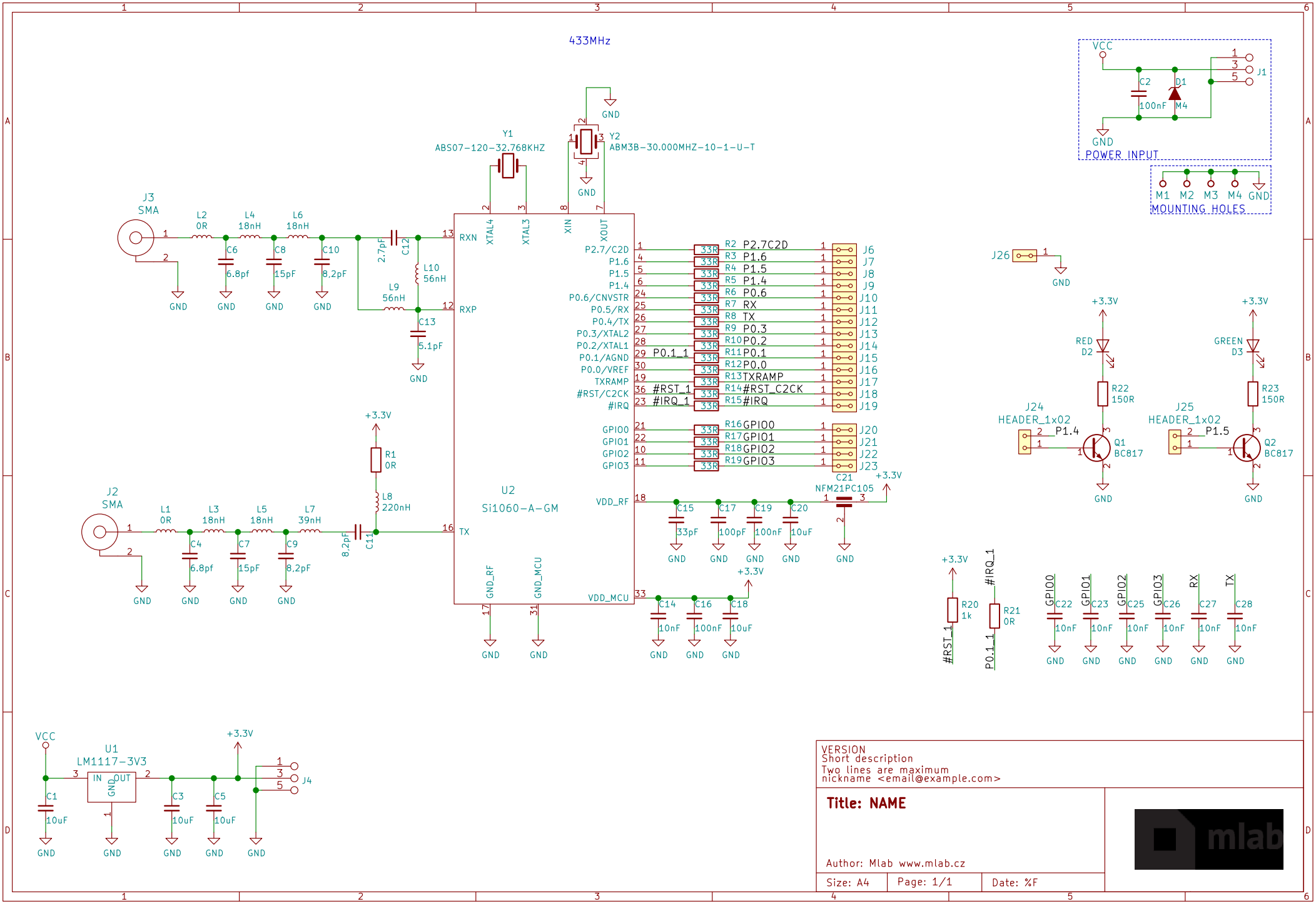
433MHz
Y1
ABS07-120-32.768KHZ
Y2
ABM3B-30.000MHZ-10-1-U-T
J3
SMA
J2
SMA
U2
Si1060-A-GM
RXN
RXP
TX
XTAL4
XTAL3
XIN
XOUT
GND_RF
GND_MCU
VDD_RF
VDD_MCU
P2.7/C2D
P1.6
P1.5
P1.4
P0.6/CNVSTR
P0.5/RX
P0.4/TX
P0.3/XTAL2
P0.2/XTAL1
P0.1/AGND
P0.0/VREF
TXRAMP
#RST/C2CK
#IRQ
GPIO0
GPIO1
GPIO2
GPIO3
P0.1_1
#RST_1
#IRQ_1
P2.7C2D
P1.6
P1.5
P1.4
P0.6
RX
TX
P0.3
P0.2
P0.1
P0.0
TXRAMP
#RST_C2CK
#IRQ
GPIO0
GPIO1
GPIO2
GPIO3
L1 0R
L2 0R
L3 18nH
L4 18nH
L5 18nH
L6 18nH
L7 39nH
L8 220nH
L9 56nH
L10 56nH
C4 6.8pf
C6 6.8pf
C7 15pF
C8 15pF
C9 8,2pF
C10 8,2pF
C11 8,2pF
C12 2.7pF
C13 5.1pF
R1 0R
C15 33pF
C17 100pF
C19 100nF
C20 10uF
C21 NFM21PC105
C14 10nF
C16 100nF
C18 10uF
+3.3V
VCC
POWER INPUT
J1
C2 100nF
D1 M4
M1 M2 M3 M4 GND
MOUNTING HOLES
J26
RED D2
GREEN D3
R22 150R
R23 150R
J24 HEADER_1x02
J25 HEADER_1x02
P1.4
P1.5
Q1 BC817
Q2 BC817
R20 1k
R21 0R
#RST_1
P0.1_1
#IRQ_1
C22 10nF
C23 10nF
C25 10nF
C26 10nF
C27 10nF
C28 10nF
U1
LM1117-3V3
IN OUT GND
C1 10uF
C3 10uF
C5 10uF
J4
VERSION
Short description
Two lines are maximum
nickname <email@example.com>
Title: NAME
Author: Mlab www.mlab.cz
Size: A4
Page: 1/1
Date: %F
mlab