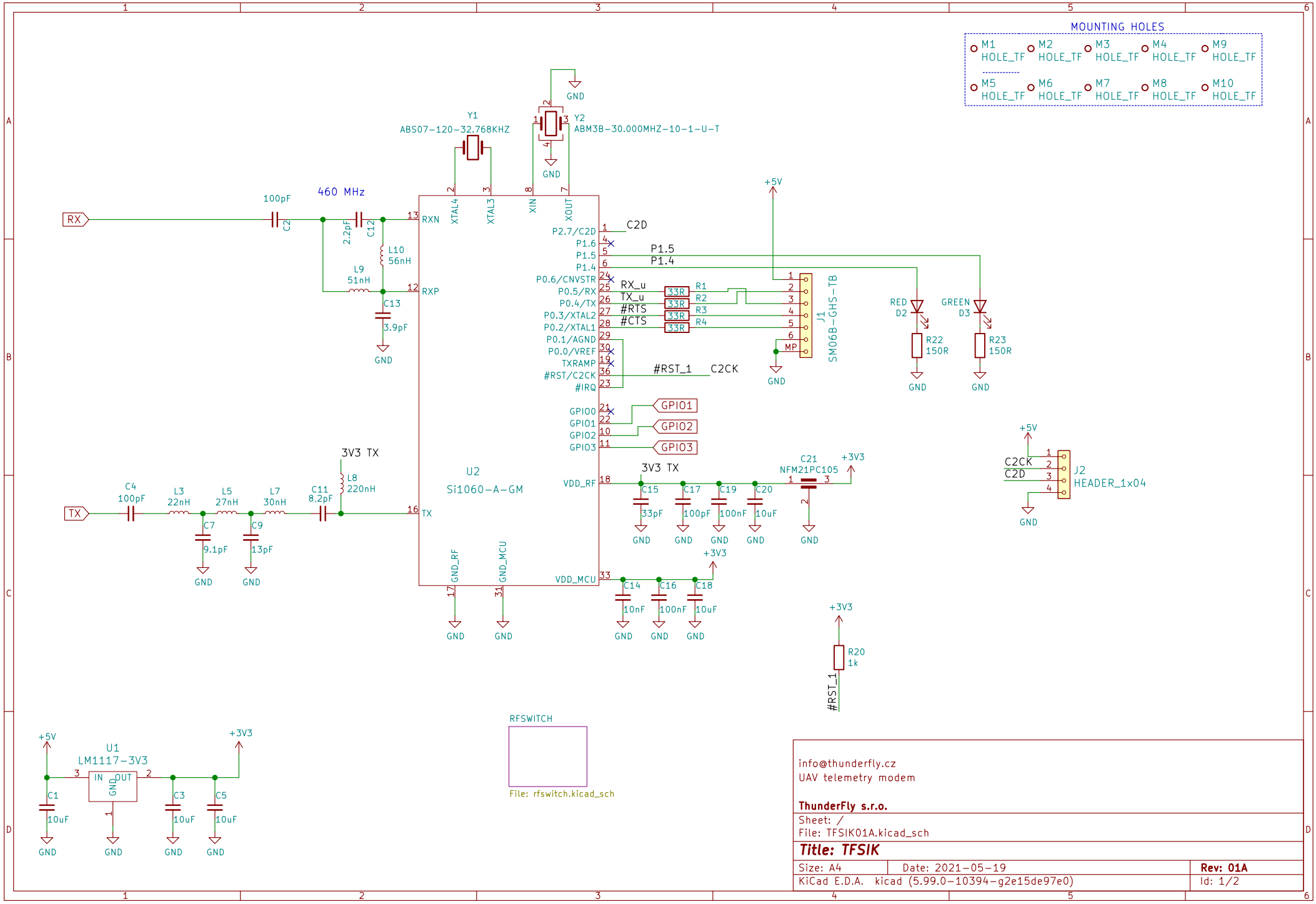


info@thunderfly.cz
UAV telemetry modem

**ThunderFly s.r.o.**

Sheet: /
File: TFSIK01A.kicad_sch

**Title: TFSIK**

| | | |
|---|---|---|
| Size: A4 | Date: 2021-05-19 | **Rev: 01A** |
| KiCad E.D.A. kicad (5.99.0-10394-g2e15de97e0) | | Id: 1/2 |

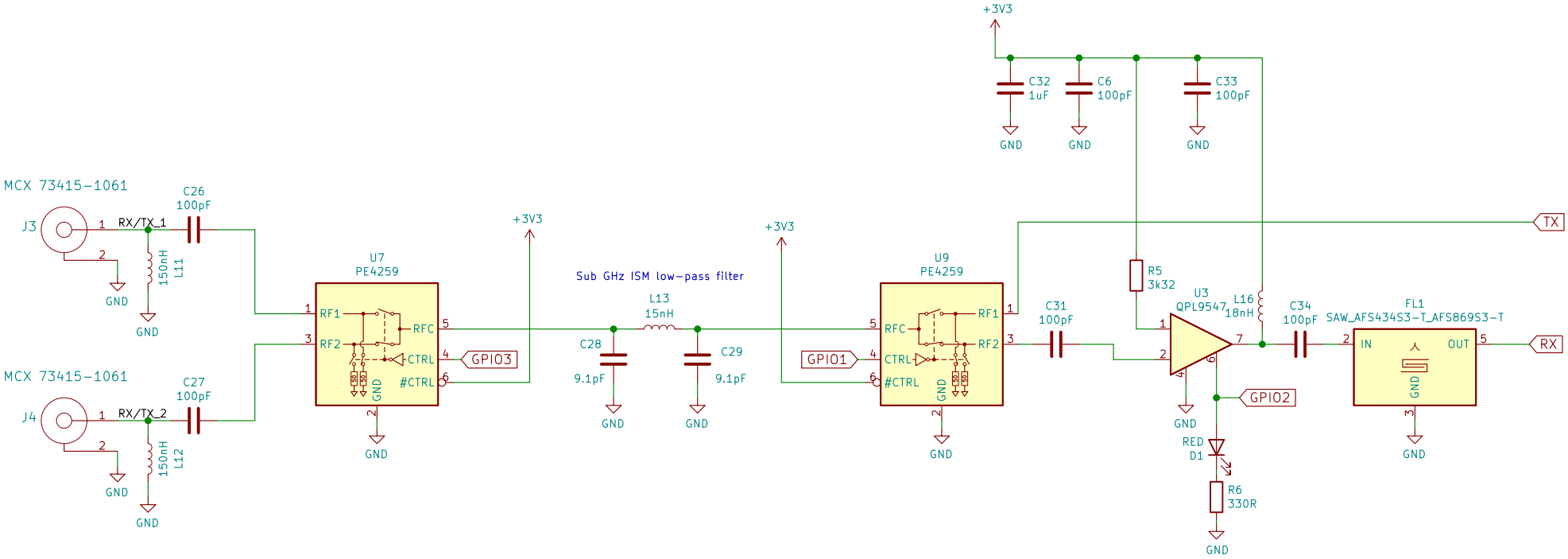


Sheet: /RFSWITCH/
File: rfswitch.kicad_sch

**Title:**

| Size: A4 | Date: | **Rev:** |
|---|---|---|
| KiCad E.D.A. kicad (5.99.0-10394-g2e15de97e0) | | Id: 4/2 |