IMPERIAL COLLEGE LONDON

DEPARTMENT OF ELECTRICAL AND ELECTRONIC ENGINEERING
EXAMINATIONS 2009

EEE PART II: MEng, BEng and ACGI

Corrected Copy

DEVICES AND FIELDS

Friday, 12 June 2:00 pm

Time allowed: 2:00 hours

There are SIX questions on this paper.

Question ONE and Question FOUR are compuslory. Answer Question One, Question Four, plus one additional question from Section A and one additional question from Section B.

Questions One and Four are each weighted at 20%. Remaining questions are each weighted at 30%.

Use a separate answer book for each section.

Any special instructions for invigilators and information for candidates are on page 1.

Examiners responsible First Marker(s) : K. Fobelets, R.R.A. Syms

Second Marker(s) : W.T. Pike, Z. Durrani

Special instructions for invigilators

This exam consists of **2 sections**. Section A: **Devices** and section B: **Fields**. Each section has to be solved in their respective answer books. Check that 2 different answer books are available for the students.
Questions 1 and 4 are obligatory.
Question 1 needs to be answered on the special answer sheet and tied to the Section A Devices answer book.

Special instructions for students

Use different answers books for each section:

Devices: answer book **A**
Fields: answer book **B**

Questions **1** and **4** are obligatory.
Solve Question **1** on the special answer sheet and tie it to answer book **A** (Devices).

Constants and Formulae for section A: Devices

permittivity of free space:	$\varepsilon_o = 8.85 \times 10^{-12}$ F/m
permeability of free space:	$\mu_o = 4\pi \times 10^{-7}$ H/m
intrinsic carrier concentration in Si:	$n_i = 1.45 \times 10^{10}$ cm^{-3} at $T = 300$K
dielectric constant of Si:	$\varepsilon_{Si} = 11$
dielectric constant of SiO_2:	$\varepsilon_{ox} = 4$
thermal voltage:	$kT/e = 0.026$V at $T = 300$K
charge of an electron:	$e = 1.6 \times 10^{-19}$ C

$$\left.\begin{aligned} J_n(x) &= e\mu_n n(x)E(x) + eD_n \frac{dn(x)}{dx} \\ J_p(x) &= e\mu_p p(x)E(x) - eD_p \frac{dp(x)}{dx} \end{aligned}\right\}$$ Drift-diffusion current equations

$$I_{DS} = \frac{\mu C_{ox} W}{L}\left((V_{GS} - V_T)V_{DS} - \frac{V_{DS}^2}{2}\right)$$ MOSFET current

$$\left.\begin{aligned} J_n &= \frac{eD_n n_p}{L_n}\left(e^{\frac{eV}{kT}} - 1\right) \\ J_p &= \frac{eD_p p_n}{L_p}\left(e^{\frac{eV}{kT}} - 1\right) \end{aligned}\right\}$$ Diode diffusion currents

$$V_0 = \frac{kT}{e}\ln\left(\frac{N_A N_D}{n_i^2}\right)$$ Built-in voltage

$$c = c_0 \exp\left(\frac{eV}{kT}\right) \text{ with } \begin{cases} c = p_n \text{ or } n_p \\ c_0 \text{ bulk minority carrier concentration} \end{cases}$$ Minority carrier injection under bias V

$$\delta c = \Delta c \exp\left(\frac{-x}{L}\right) \text{ with } \begin{cases} \delta c = \delta p_n \text{ or } \delta n_p \\ \Delta c \text{ the excess carrier concentration} \\ \text{at the edge of the depletion region} \end{cases}$$ Excess carrier concentration as a function of distance

$$L = \sqrt{D\tau}$$ Diffusion length

$$D = \frac{kT}{e}\mu$$ Einstein relation

$$W_{depl} = \left[\frac{2\varepsilon V_0}{e}\frac{N_A + N_D}{N_A N_D}\right]^{1/2}$$ Depletion width in pn diode

$$C_{diff} = \frac{e}{kT} I\tau$$ Diffusion capacitance

Constants and Formulae for section B: Fields

Vector calculus (Cartesian co-ordinates)

$\nabla = \underline{i}\ \partial/\partial x + \underline{j}\ \partial/\partial y + \underline{k}\ \partial/\partial z$

$\nabla^2 = \partial^2/\partial x^2 + \partial^2/\partial y^2 + \partial^2/\partial z^2$

$\text{grad}(\phi) = \nabla\phi = \underline{i}\ \partial\phi/\partial x + \underline{j}\ \partial\phi/\partial y + \underline{k}\ \partial\phi/\partial z$

$\text{div}(\underline{\mathbf{F}}) = \nabla \cdot \underline{\mathbf{F}} = \partial \mathbf{F}_x/\partial x + \partial \mathbf{F}_y/\partial y + \partial \mathbf{F}_z/\partial z$

$\text{curl}(\underline{\mathbf{F}}) = \nabla \times \underline{\mathbf{F}} = \underline{i}\ \{\partial \mathbf{F}_z/\partial y - \partial \mathbf{F}_y/\partial z\} + \underline{j}\ \{\partial \mathbf{F}_x/\partial z - \partial \mathbf{F}_z/\partial x\} + \underline{k}\ \{\partial \mathbf{F}_y/\partial x - \partial \mathbf{F}_x/\partial y\}$

Where ϕ is a scalar field and $\underline{\mathbf{F}}$ is a vector field

Maxwell's equations – integral form

$\iint_A \underline{\mathbf{D}} \cdot d\underline{a} = \iiint_V \rho\ dv$

$\iint_A \underline{\mathbf{B}} \cdot d\underline{a} = 0$

$\int_L \underline{\mathbf{E}} \cdot d\underline{L} = -\iint_A \partial\underline{\mathbf{B}}/\partial t \cdot d\underline{a}$

$\int_L \underline{\mathbf{H}} \cdot d\underline{L} = \iint_A [\underline{\mathbf{J}} + \partial\underline{\mathbf{D}}/\partial t] \cdot d\underline{a}$

Where $\underline{\mathbf{D}}$, $\underline{\mathbf{B}}$, $\underline{\mathbf{E}}$, $\underline{\mathbf{H}}$, $\underline{\mathbf{J}}$ are time-varying vector fields

Maxwell's equations – differential form

$\text{div}(\underline{\mathbf{D}}) = \rho$

$\text{div}(\underline{\mathbf{B}}) = 0$

$\text{curl}(\underline{\mathbf{E}}) = -\partial\underline{\mathbf{B}}/\partial t$

$\text{curl}(\underline{\mathbf{H}}) = \underline{\mathbf{J}} + \partial\underline{\mathbf{D}}/\partial t$

Material equations

$\underline{\mathbf{J}} = \sigma\ \underline{\mathbf{E}}$

$\underline{\mathbf{D}} = \varepsilon\ \underline{\mathbf{E}}$

$\underline{\mathbf{B}} = \mu\ \underline{\mathbf{H}}$

Theorems

$\iint_A \underline{\mathbf{F}} \cdot d\underline{a} = \iiint_V \text{div}(\underline{\mathbf{F}})\ dv$ – Gauss' theorem

$\int_L \underline{\mathbf{F}} \cdot d\underline{L} = \iint_A \text{curl}(\underline{\mathbf{F}}) \cdot d\underline{a}$ – Stokes' theorem

$\text{curl}\ \{\text{curl}(\underline{\mathbf{F}})\} = \text{grad}\ \{\text{div}(\underline{\mathbf{F}})\} - \nabla^2\underline{\mathbf{F}}$

Constants and Formulae for section B: Fields (continued)

Electromagnetic waves (pure dielectric media)

Time dependent vector wave equation $\nabla^2 \underline{\mathbf{E}} = \mu_0 \varepsilon \, \partial^2 \underline{\mathbf{E}} / \partial t^2$

Time independent scalar wave equation $\nabla^2 \underline{E} = -\omega^2 \mu_0 \varepsilon_0 \varepsilon_r \, \underline{E}$

For z-going, x-polarized waves $d^2E_x/dz^2 + \omega^2 \mu_0 \varepsilon_0 \varepsilon_r \, E_x = 0$

Where $\underline{E}$ is a time-independent vector field

Antenna formulae

Far-field pattern of half-wave dipole

$E_\theta = j \, 60 I_0 \{\cos[(\pi/2)\cos(\theta)] / \sin(\theta)\} \exp(-jkR)/R$; $H_\phi = E_\theta / Z_0$

Here I_0 is peak current, R is range and $k = 2\pi/\lambda$

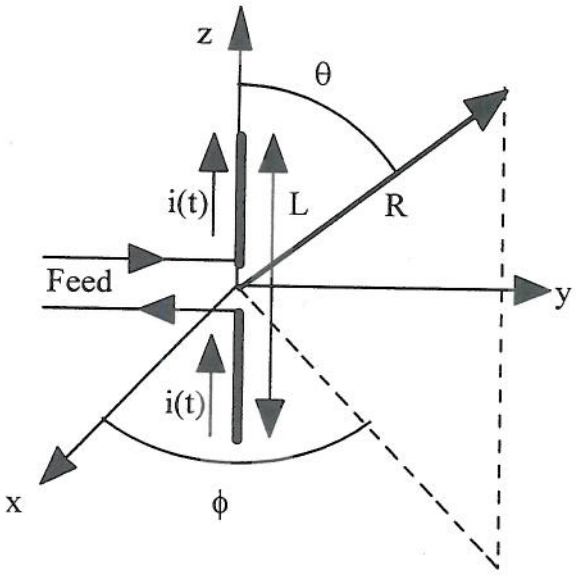

Power density $\underline{S} = 1/2 \, \mathrm{Re} \, (\underline{E} \times \underline{H}^*) = S(R, \theta)$

Normalised radiation pattern $F(\theta, \phi) = S(R, \theta, \phi) / S_{max}$

Directivity $D = 1/ \{1/4\pi \iint_{4\pi} F(\theta, \phi) \sin(\theta) \, d\theta \, d\phi\}$

Gain $G = \eta D$ where η is antenna efficiency

Effective area $A_e = \lambda^2 D / 4\pi$

Friis transmission formula $P_r = P_t (\eta_t \eta_r A_t A_r / R^2 \lambda^2)$

SECTION A: SEMICONDUCTOR DEVICES

1. This question is obligatory

In Fig.1.1 a sketch of the energy band diagram of a pn diode is given. Solve the questions on the special answer sheet. Tie your answer sheet to your exam answer book.

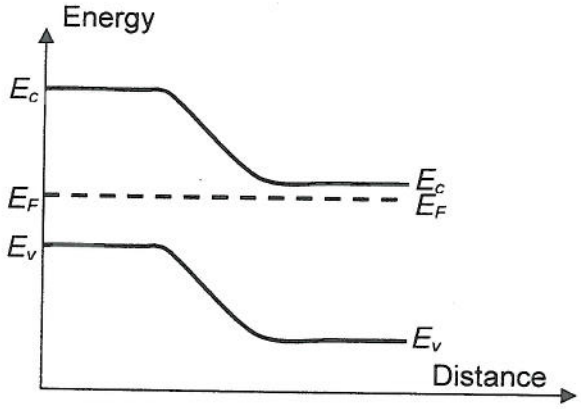

Figure 1.1: The energy band diagram of a pn junction. E_c is at the bottom of the conduction band, E_v at the top of the valence band and E_F at the Fermi level.

a. Indicate the type of the semiconductor (n or p) at both sides of the junction. [2]

b. Draw vertical lines at the edges of the depletion region. [2]

c. Give the relationship between the doping in the two layers. [2]
N_A >,< or = N_D (N_A acceptor doping, N_D donor doping)

d. Give the relationship between the depletion regions extending into the n and p-doped regions. [2]
W_p >,< or = W_n (W_p depletion width extending into the p-type region, W_n depletion width extending into the n-type region)

e. Give the reason for your answer in d. (briefly!). [2]

f. Indicate the position of the metallurgical junction. [2]

g. Draw the vector of the internal electric field. Ensure that the field vector starts and stops at the correct place on the diagram. [2]

h. Give the relationship between the electron and hole diffusion current when the diode is forward biased. (See formulae sheet). [2]
I_n >,< or = I_p (I_n electron current, I_p hole current)

i. In which region (n or p or depletion region) will the largest excess minority carrier concentration occur when the diode is in forward bias? The regions have the same length. [2]

j. How can you re-design this pn diode to reduce this excess carrier concentration? [2]

2. Figure 2.1 gives the cross section and the excess carrier concentration across a Bipolar Junction Transistors (BJTs).

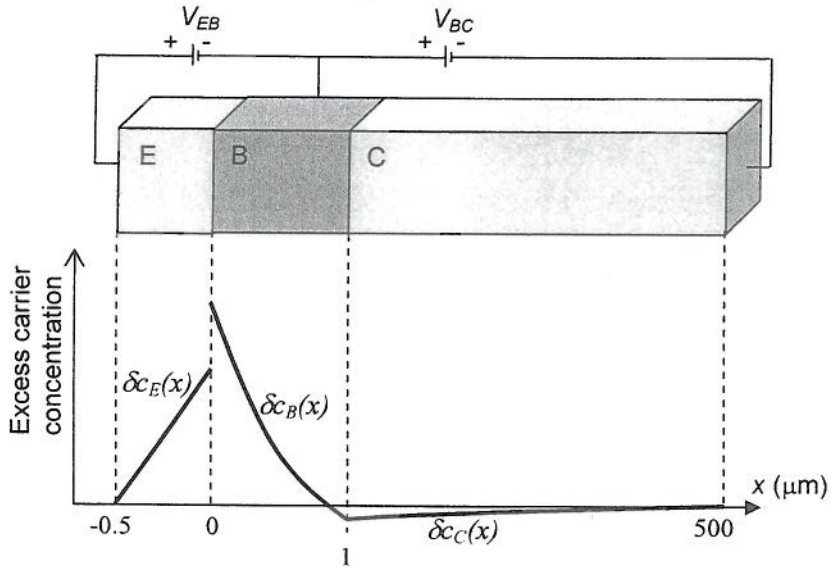

Figure 2.1: Top: BJT in forward active mode. Bottom: Excess minority carrier concentration in the different regions of the BJT. δc_E, δc_B, δc_C, are the excess carrier concentrations in respectively emitter, base and collector.

Device parameters:
The width of each layer in respectively E, B and C is $W_E = 0.5$ μm, $W_B = 1$μm and $W_C = 500$ μm. The diffusion lengths of the minority carriers are $L_E = 1$μm, $L_B = 1.5$ μm and $L_C = 1.5$ μm. The diffusion constants of the minority carriers are $D_E = 5$ cm^2/s, $D_B = 10$ cm^2/s and $D_C = 10$ cm^2/s. Ignore the influence of the depletion widths.
The expressions of the excess minority carrier concentration at room temperature in the base and emitter are given by:

$$\delta c_B(x) = -7.8072 \times 10^9 \times \exp(x / L_B) + 2.9617 \times 10^{10} \times \exp(-x / L_B) \quad [cm^{-3}]$$

$$\delta c_E(x) = -1.08 \times 10^7 \times x + 2.16 \times 10^7 \quad [cm^{-3}]$$

L_B is the diffusion length of the minority carriers in the base region. The cross sectional area $A = 10^{-4}$ cm^2.

With reference to the BJT given in fig. 2.1:

a. Give the doping type (n or p) in all regions (E, B, C). [3]

b. Give the excess minority carrier type (δp_n or δn_p) in all regions (E, B, C). Thus e.g. $\delta c_E = \delta p_n$ or δn_p, etc. [3]

c. Calculate the emitter current I_E. [8]

d. Calculate the base currents I'_B and I''_B (respectively the contribution due to escape of carrier from the base to the emitter and due to recombination in the base. Calculate the total base current. Ignore I_{BC0}. [9]

e. Calculate the collector current I_C. Ignore I_{BC0}. [4]

f. What happens to the collector current if we make the base 10 μm? [3]

3. Figure 3.1 give the cross section of a pn diode and the excess carrier concentration in both regions of the device.

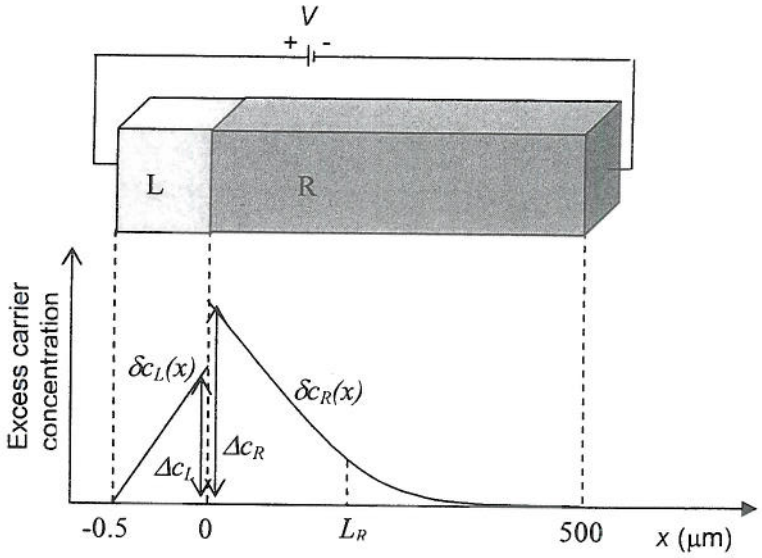

Figure 3.1: Top: a pn diode in forward bias. Bottom: Excess minority carrier concentration in the different regions of the diode. δc_L, δc_R are the excess carrier concentrations in respectively the left and right side of the diode.

Device parameters:
The excess carrier concentrations at the junction are: $\Delta c_R = 2.16\ 10^{10}$ cm^{-3}, $\Delta c_L = 2.16\ 10^{7}$ cm^{-3}. The diffusion length of the minority carriers in each layer is $L_L = 1$ μm and $L_R = 1.5$ μm. The diffusion constants of the minority carriers in each layer is $D_L = 5$ cm^2/s, $D_R = 10$ cm^2/s. The cross sectional area $A = 10^{-4}$ cm^2.

a. Give the doping type (n or p) in all regions (L, R). [2]

b. Give the excess minority carrier type (δp_n or δn_p) in all regions (L, R). Thus e.g. $\delta c_L = \delta p_n$ or δn_p, etc. [2]

c. Does the total pn diode current increase or decrease when the doping density in both layers is increased? Give a brief reason. [4]

d. Derive the expression for the diffusion current only in R as a function of x and the excess minority carrier concentration. [5]

e. Derive the expression for the diffusion current only in L as a function of x and the excess minority carrier concentration. [5]

f. Calculate the value of the drift current only in R at $x=L_R$. [7]

g. When simulating pn diodes in SPICE, the parameter GMIN (1/Ω) is required. Draw the equivalent circuit of the diode to show where this parameter appears and explain why it is introduced. [5]

SECTION B: ELECTROMAGNETIC FIELDS

4. This question is obligatory

Using suitable diagrams and formulae, explain <u>any four</u> of the following terms:

a) Displacement current

b) Total internal reflection

c) Quarter-wave transformer

d) Broadside antenna

e) Radar equation

f) Skin depth

g) Microstrip

h) Microwave oven

NB. Do not answer more than four parts. If you do, the lowest four of your marks will be awarded.

[4 x 5 = 20]

5. Figure 5.1 shows a short length of a ladder network, with each section of length *a* containing a series inductance *L* and a parallel capacitance *C*.

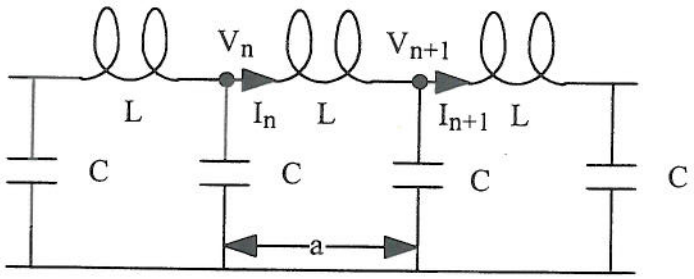

Figure 5.1: short length of ladder network.

a) Using Kirchhoff's equations, write down the relations between the current I_n and voltage V_n in the nth section and the corresponding current I_{n+1} and voltage V_{n+1} in the n+1th section. Assuming the solution:
$V_n = V_0 \exp(-jnka)$ and $I_n = I_0 \exp(-jnka)$,
derive a relation between ω and ka. [15]

b) Sketch the variation of ω with ka over the range $0 \leq ka \leq 2\pi$. What is the maximum angular frequency that can propagate? Find an approximation to the relation between ω and ka at low frequencies, and hence show that the phase velocity of waves on the line is $v_{ph} = 1/\sqrt{(L'C')}$ where L' and C' are the per-unit-length inductance and capacitance, respectively. [15]

6. Figure 6.1 shows a spherical lens, formed in a material of refractive index n, whose maximum thickness is d and whose surfaces have radii of curvature r_1 and r_2.

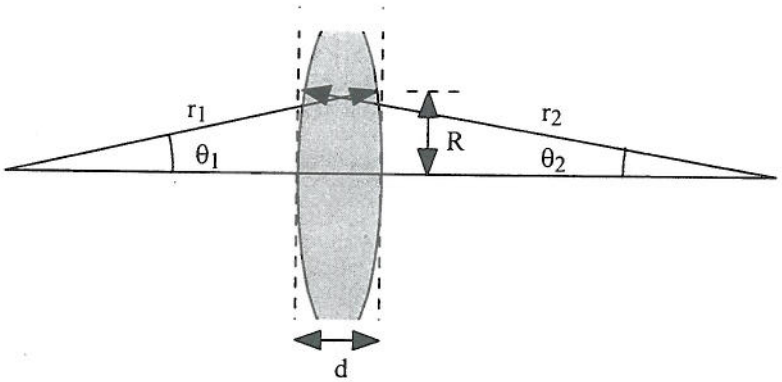

Figure 6.1: spherical lens.

a) Using small angle approximations, derive an expression for the optical thickness of the lens as a function of the radial coordinate R. Derive the transfer function of the lens, and express it in terms of its focal length f, where $1/f = (n - 1)\{1/r_1 + 1/r_2\}$. [8]

b) A spherical wave is defined by the electric field variation $E(r) = (E_0/r)\exp(-jk_0r)$, where E_0 is a constant, r is the radius, and k_0 is the propagation constant. Derive a paraxial approximation to this wave, assuming that it is travelling predominantly in the z-direction. [8]

c) The lens above is used to form an image of an axial point object at a distance u from the lens. Show that an axial image is formed at a distance v from the lens, where $1/u + 1/v = 1/f$. [7]

d) A student has four lenses, with the parameters shown in Table 6.1. What are their focal lengths? He wishes to form a real image of an object 400 mm from a lens. Which one should he use? [7]

Lens	Refractive index	Surface 1	Radius 1	Surface 2	Radius 2
1	1.5	Convex	200 mm	Convex	200 mm
2	1.5	Convex	400 mm	Plane	Infinity
3	1.5	Concave	200 mm	Concave	200 mm
4	1.5	Concave	400 mm	Plane	Infinity

Table 6.1: parameters of 4 lenses.

SECTION A: SEMICONDUCTOR DEVICES

ANSWER SHEET **CANDIDATE NUMBER:**

1. This question is obligatory

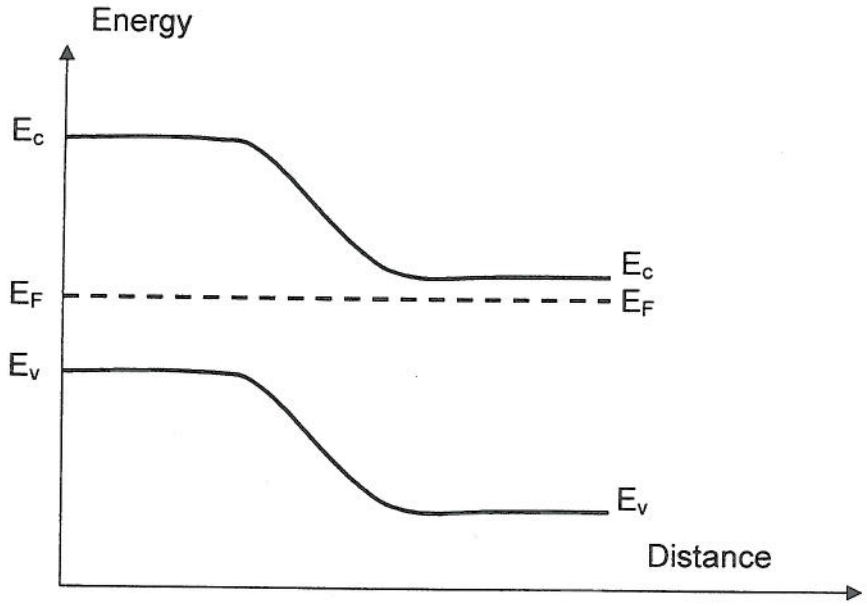

Figure 1.1: The energy band diagram of a pn junction. E_c is the bottom of the conduction band, E_v the top of the valence band and E_F is the Fermi level.

a. [2]

b. [2]

c. [2]

d. [2]

e. [2]

f. [2]

g. [2]

h. [2]

i. [2]

j. [2]

SECTION A: SEMICONDUCTOR DEVICES SOLUTIONS 2009

1. This question is obligatory

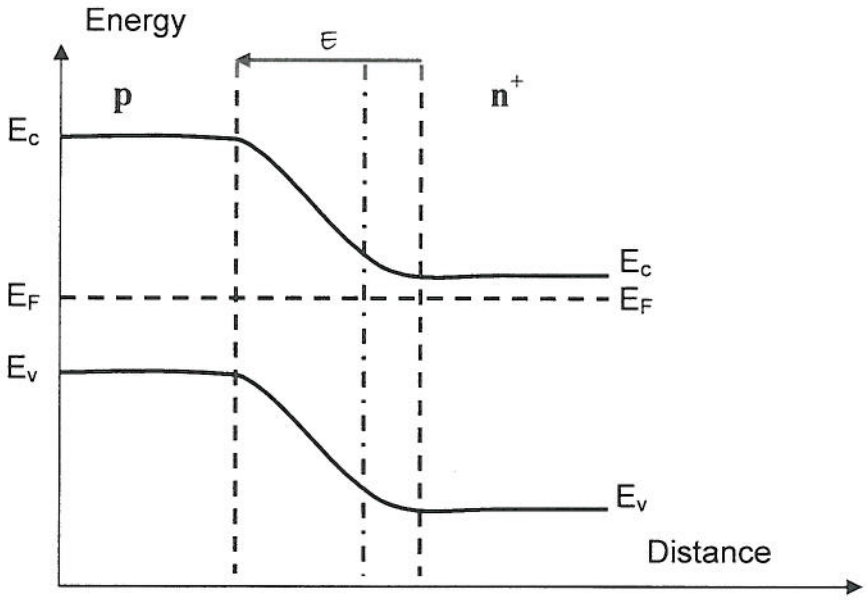

Figure 1.1: The energy band diagram of a pn junction. E_c is the bottom of the conduction band, E_v the top of the valence band and E_F is the Fermi level.

a. Note that n-doped material is higher doped that p-type → n^+. [2]

b. These lines should occur at the *end* of the constant E_c lines. (dashed lines) [2]

c. $N_A < N_D$. (Since $E_c - E_F$ in n region << $E_F - E_v$ in p region.) [2]

d. $W_p >, W_n$. [2]

e. Is a result of charge neutrality in the depletion region. [2]
Or: $e\, N_A\, W_p\, A = e\, N_D\, W_n\, A$. Since $N_A < N_D \rightarrow W_p >, W_n$.

f. Dotted-dashed line *closer* to the n-depletion edge. [2]

g. Point uphill and start and stop at the edges of the depletion region. [2]

h. $I_n > I_p$ [2]

i. p-region. [2]

j. Decrease the length of the regions. The stored carrier concentration is proportional to the excess carrier concentration at the depletion region edge (dependent on doping and applied voltage only) multiplied by the width of the layer. [2]

2. Bipolar Junction Transistors (BJTs)

a. Based on the biasing conditions and the fact that the device is forward active mode you find that E=p^+ type, B=n type and C is p type. [3]

b. $\delta c_E = \delta n_p$, $\delta c_B = \delta p_n$, $\delta c_C = \delta p_n$ [3]

c. The emitter current I_E is the total current across the base-emitter junction. $I_E = I_n + I_p$ (electron + hole current). The electron current is calculated in the emitter region and the hole current is calculated from the gradient of $\delta c_B(x)$ at the edge of the base-emitter junction.

$$I_n = eD_n A \frac{d\delta c_E}{dx}$$

$$= 1.6\times10^{-19} C \times 5\,(cm^2/s)\times10^{-4}\,(cm^2)\frac{1.08\times10^{7}\,(cm^{-3})}{0.5\times10^{-4}\,(cm)}. \qquad [8]$$

$$= -1.73\times10^{-11}\ A$$

$$I_p = eD_n A \left.\frac{d\delta c_B}{dx}\right|_{x=0} = eD_n A \left.\frac{d\left(-7.8072\times10^{9}\times\exp(x/L_B)+2.9617\times10^{10}\times\exp(-x/L_B)\right)}{dx}\right|_{x=0}$$

$$= eD_n A\left.\left(\frac{-7.8072\times10^{9}\,(cm^{-3})}{L_B\,(cm)}\times\exp(x/L_B)-\frac{2.9617\times10^{10}\,(cm^{-3})}{L_B\,(cm)}\times\exp(-x/L_B)\right)\right|_{x=0}$$

$$= eD_n A\left(\frac{-7.8072\times10^{9}}{1.5\times10^{-4}}-\frac{2.9617\times10^{10}}{1.5\times10^{-4}}\right)$$

$$= -1.6\times10^{-19} C\times5\,(cm^2/s)\times10^{-4}\,(cm^2)\,2.4949\times10^{14}\,(cm^{-4})$$

$$= -3.99\times10^{-8}\ A$$

Thus:

$$I_E = -1.73\times10^{-11} - 3.99\times10^{-8}\,A = 3.99\times10^{-8}\,A$$

d. $I'_B = I_n = -1.73\times10^{-11}\,A$

I''_B is the difference between the current injected into the base at the emitter-base junction and the current arriving at the base-collector junction.

The current injected into the base is I_p. calculated in part c.

The current collected at the collector is the gradient of δc_B at the base collector junction inside the base. [9]

$$I_C = eD_p A \frac{d\delta c_B}{dx}\bigg|_{x=W_B} = eD_n A \frac{d\left(-7.8072\times10^9 \times \exp(x/L_B) + 2.9617\times10^{10} \times \exp(-x/L_B)\right)}{dx}\bigg|_{x=W_B}$$

$$= eD_p A\left(\frac{-7.8072\times10^9\ (cm^{-3})}{L_B\ (cm)} \times \exp(x/L_B) - \frac{2.9617\times10^{10}\ (cm^{-3})}{L_B\ (cm)} \times \exp(-x/L_B)\right)\bigg|_{x=W_B}$$

$$= eD_p A\left(\frac{-7.8072\times10^9}{1.5\times10^{-4}} \exp(W_B/L_B) - \frac{2.9617\times10^{10}}{1.5\times10^{-4}} \exp(-W_B/L_B)\right)$$

$$= eD_p A\left(\frac{-7.8072\times10^9}{1.5\times10^{-4}} \exp(1/1.5) - \frac{2.9617\times10^{10}}{1.5\times10^{-4}} \exp(-1/1.5)\right)$$

$$= -1.6\times10^{-19} C \times 10\,(cm^2/s) \times 10^{-4}\ (cm^2)\, 2.03\times10^{14}\ (cm^{-4})$$

$$= -3.25\times10^{-8} A$$

$$I''_B = -3.99\times10^{-8} + 3.25\times10^{-8} = -7.46\times10^{-9} A$$

e. The collector current is I_C calculated in part d. [4]
I_C=-3.25 10^{-8} A

f. 10 μm is much longer than the diffusion length of the minority carriers in the base (1.5 μm) thus most of the injected holes will be recombined after 10 μm and thus the collector current will be nearly zero (very small). [3]

3. pn diode

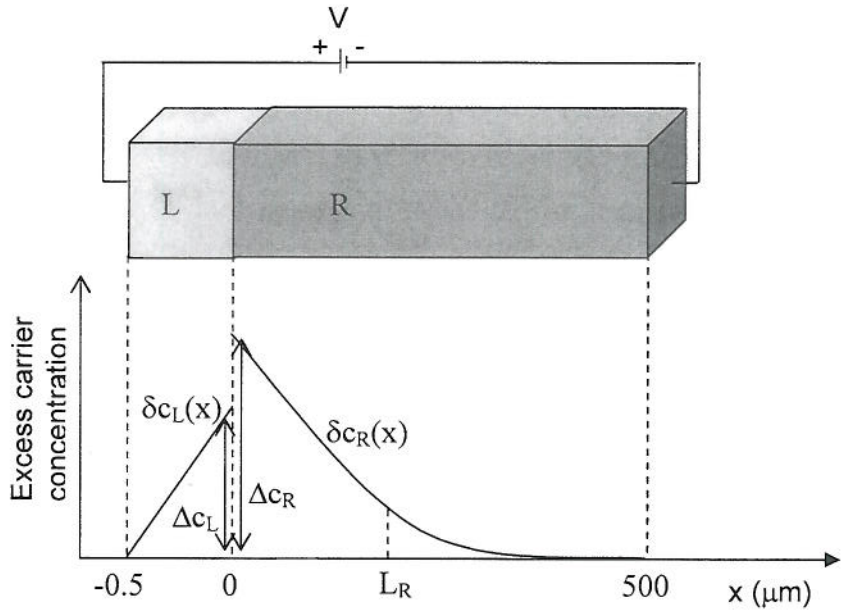

Figure 3.1: Top: Sketch of a pn diode in forward bias. Bottom: Excess minority carrier concentration in the different regions of the diode. δc_L, δc_R are the excess carrier concentrations in respectively the left and right side of the diode. The excess carrier concentrations at the junction are: Δc_R=2.16 10^{10} cm^{-3}, Δc_L=2.16 10^7 cm^{-3}. The diffusion length of the minority carriers in both layers is L_L=L_R=1.5 μm.

a. L is p^+-doped and R is n doped. [2]

b. $\delta c_L = \delta n_p$ and $\delta c_R = \delta p_n$. [2]

c. Formulae sheet gives current densities $\rightarrow$ $J_n = \frac{eD_n n_p}{L_n}\left(e^{\frac{eV}{kT}} - 1\right)$, $J_p = \frac{eD_p p_n}{L_p}\left(e^{\frac{eV}{kT}} - 1\right)$ thus

$J_n \propto n_p = \frac{n_i^2}{N_A}$, $J_p \propto p_n = \frac{n_i^2}{N_D}$ thus currents are inversely proportional to the doping densities.

Currents decrease when doping densities increase. [4]

d. Exponential variation of the minority carrier concentration. See expression in formulae sheet: $\delta c_R = \Delta c_R \exp\left(\frac{-x}{L_R}\right)$.

$I_R = -eD_p A \frac{d\delta c_R}{dx} = -eD_p \Delta c_R A \frac{d\exp\left(\frac{-x}{L_R}\right)}{dx} = \frac{eD_p \Delta c_R A}{L_R}\exp\left(\frac{-x}{L_R}\right)$. Diffusion current varies exponentially as a function of x. [5]

e. $I_L = I_n = \frac{eD_n \Delta c_L A}{0.5\mu m}$ linear variation of the minority carrier concentration thus diffusion current is constant as a function of x. [5]

f. The drift current in the R region where recombination has to be taken into account is given by:

$$I_R^{drift}(x = L_R) = I_{tot} - I_R^{diff}(x = L_R)$$

$$I_{tot} = \frac{eD_n \Delta c_L A}{0.5\mu m} + \frac{eD_p \Delta c_R A}{L_R} \exp\left(\frac{-x}{L_R}\right)\Bigg|_{x=0}$$

the total current is the maximum diffusion current in the system, thus is determined by the maximum gradient in R which is at x=0.

$$I_{tot} = \frac{eD_n \Delta c_L A}{0.5\mu m} + \frac{eD_p \Delta c_R A}{L_R}$$

$$I_R^{drift}(x = L_R) = \frac{eD_n \Delta c_L A}{0.5\mu m} + \frac{eD_p \Delta c_R A}{L_R} - \frac{eD_p \Delta c_R A}{L_R} \exp\left(\frac{-L_R}{L_R}\right)$$

$$I_R^{drift}(x = L_R) = \frac{eD_n \Delta c_L A}{0.5\mu m} + \frac{eD_p \Delta c_R A}{L_R}(1 - \exp(-1))$$

$$I_R^{drift}(x = L_R) = 1.6 \times 10^{-19}\left(\frac{5 \times 2.16\,10^7}{0.5 \times 10^{-4}} + \frac{10 \times 2.16\,10^{10}}{1.5 \times 10^{-4}}(1 - \exp(-1))\right) \times 10^{-4}$$

$$I_R^{drift}(x = L_R) = 1.46 \times 10^{-8}\,A$$

Calculate the drift current in R at $x=L_R$. [7]

g. Equivalent circuit. [5]

Both are acceptable:

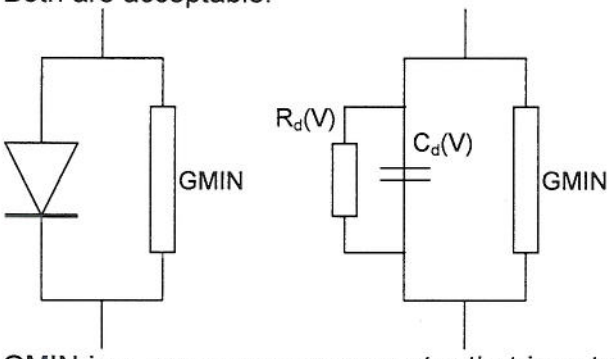

GMIN is a convergence parameter that is not directly related to the pn diode. It ensures that in the calculation at very low or negative voltages (where the conductance of the diode is nearly zero) the simulations will not divide with a smaller value than GMIN. This improves the convergence of the simulator.

4. a) Displacement current

The parallel-plate capacitor below is linked to a circuit by wires carrying a current I. Time-varying currents can travel round the circuit, despite the absence of conducting material between the plates. To account for this, Maxwell proposed the displacement current. If A is the area of each plate, and Q is the charge on it, then the electric field E between the plates is $E = Q/\varepsilon A$. As the charge varies, the field changes, so that $\varepsilon\, dE/dt = I/A$ is a current density. Maxwell defined the displacement current density $\underline{\mathbf{J}}_D$ as $\underline{\mathbf{J}}_D = \varepsilon\, \partial\underline{\mathbf{E}}/\partial t = \partial\underline{\mathbf{D}}/\partial t$, which is added into any calculation involving the normal current density.

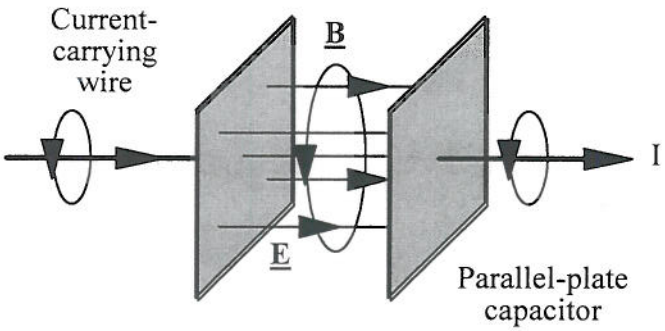

[5]

b) Total internal reflection

The LH figure below shows a plane wave incident at θ_1 on two semi-infinite media, with refractive indices n_1 and n_2, respectively. For small θ_1 the incident beam will give rise to a reflected beam in Medium 1 and a transmitted beam in Medium 2. The angle of transmission is defined by Snell's law, $n_1 \sin(\theta_1) = n_2 \sin(\theta_2)$, If $n_1 > n_2$ we get $\theta_2 = \pi/2$ for $\theta_1 = \sin^{-1}(n_2/n_1)$ (the critical angle). In this case, the transmitted wave travels parallel to the interface, as shown in the RH figure. For $\theta_1 > \theta_c$, however, there is no real solution for θ_2, so that a propagating transmitted wave cannot arise. Under these conditions, all the energy is reflected. Total internal reflection is the basis of dielectric waveguides.

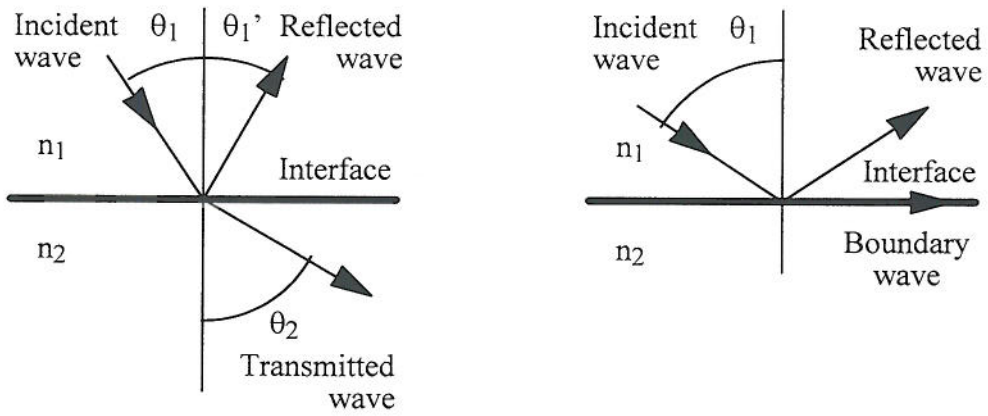

[5]

c) Quarter-wave transformer

A quarter-wave transformer is a frequency selective method of matching two lines (or two media) with impedances Z_1 and Z_2. A short section of impedance Z_3 is inserted between the two, as shown below. The input impedance of a length L of line of characteristic impedance Z_0 terminated by a load Z_L is $Z_{in} = Z_0 \{Z_L + jZ_0 \tan(kL)\} / \{Z_0 + jZ_L \tan(kL)\}$. If the length of the section is $L = \lambda/4$ (so $k_3L = \pi/2$), the input impedance of Lines 3 and 2 is $Z_{in} = Z_3 \{Z_2 + jZ_3 \tan(\pi/2)\} / \{Z_3 + jZ_2 \tan(\pi/2)\} = Z_3^2/Z_2$

Z_{in} presents a matched load to Line 1 if $Z_1 = Z_3^2/Z_2$; hence Z_3 should be geometric mean of Z_1 and Z_2.

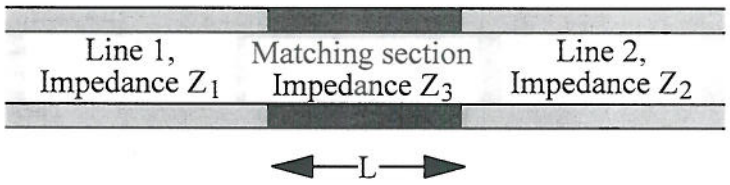

[5]

d) Broadside antenna

A broadside antenna is an array of otherwise undirective antennae (e.g. dipoles) arranged to have increased sensitivity in a broadside direction. If the individual antenna in the figure below create far-field electric field patterns $E(\phi)$, the pair together generate a field $E'(\phi) = E(\phi) \{1 + \exp[-jkd \cos(\phi)]\}$

This can be written as $E'(\phi) = 2E(\phi) \exp\{-jkd \cos(\phi)/2\} \cos\{+jkd \cos(\phi)/2)\}$

Hence, the overall radiation pattern is $F'(\phi) = \cos^2\{kd \cos(\phi)/2\}$

If $kd/2 = \pi/2$, i.e. if $d = \lambda/2$, the radiation pattern peaks when $\phi = \pi/2$, i.e. broadside on.

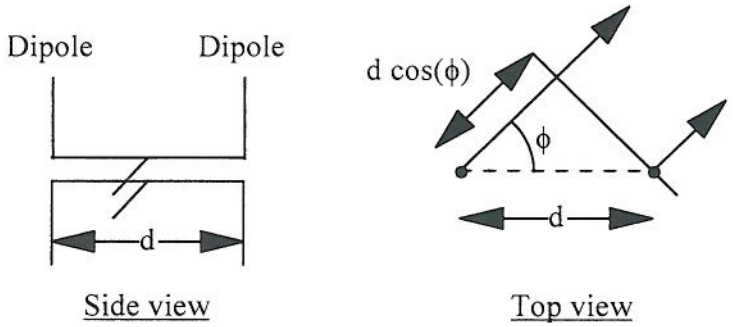

[5]

e) Radar equation

The radar equation gives the received power in a radar system. The same antenna is used for TX and RX, and switched by a duplexer as shown below. From the Friis formula, the power intercepted by the target is $P_{int} = P_t (\eta_t A_t \sigma/\lambda^2 R^2)$ where σ is the target's radar cross-section. The received power is $P_r = P_{int} (\eta_t A_t/4\pi R^2) = P_t (\eta_t^2 A_t^2 \sigma/4\pi R^4 \lambda^2)$. The range is therefore proportional to $P_t^{1/4}$.

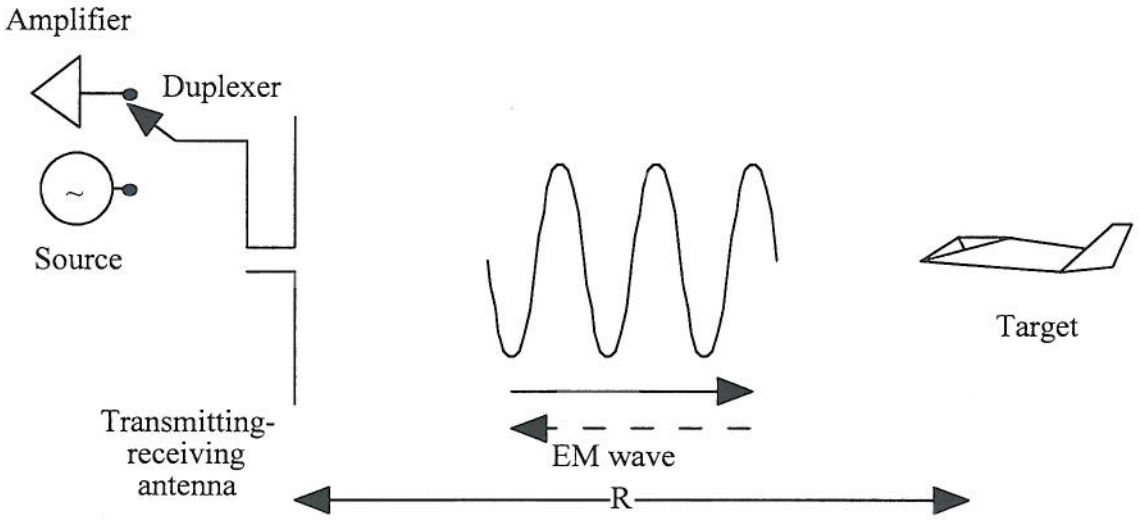

[5]

f) Skin depth

In metals, σ and $\underline{J}$ are non-zero. To derive the wave equation, we must assume $\mathrm{curl}(\underline{\mathbf{H}}) = \underline{\mathbf{J}} + \partial\underline{\mathbf{D}}/\partial t$, not simply $\partial\underline{\mathbf{D}}/\partial t$. Since $\underline{\mathbf{J}} = \sigma\underline{\mathbf{E}}$, $\underline{\mathbf{D}} = \varepsilon\underline{\mathbf{E}}$, so $\partial\underline{D}/\partial t = j\omega\varepsilon\partial\underline{D}/\partial t$ and $\mathrm{curl}(\underline{H}) = (\sigma + j\omega\varepsilon)\underline{E}$ for time independent fields. We must therefore substitute $\sigma + j\omega\varepsilon$ in place of $j\omega\varepsilon$ in time-independent equations derived for a pure dielectric medium. For a z-going, x-polarized wave, the wave equation in a dielectric is $d^2E_x/dz^2 = -\omega^2\mu_0\varepsilon E_x$ (given).

Hence, with conductivity we get $d^2E_x/dz^2 = -(\omega^2\mu_0\varepsilon - j\omega\mu_0\sigma)\, E_x$

For a good conductor $\omega\mu_0\sigma >> \omega^2\mu_0\varepsilon$ so $d^2E_x/dz^2 \sim j\omega\mu_0\sigma\, E_x$

Assuming the solution $E_x = E_0 \exp(-jkz)$ we obtain $k^2 \sim -j\omega\mu_0\sigma$

So $k = (1 - j)\,(\omega\mu_0\sigma/2)^{1/2} = k' - jk''$: a complex number

The wave decays as it propagates. Decay to 1/e of original amplitude occurs when $z = 1/k'' = (1/\pi f\mu_0\sigma)^{1/2}$. This distance is known the skin depth δ.

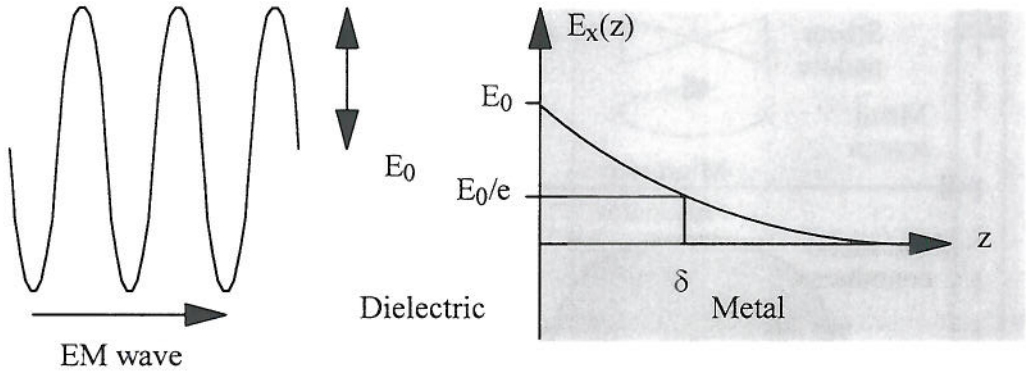

[5]

g) Microstrip

Microstrip is a common form of waveguide at mm wave frequencies, based on a strip conductor on a dielectric sheet with a rear ground plane. The characteristic impedance can be estimated as follows:

Parallel plate capacitor between strip and ground: $C_{pul} \approx \varepsilon w/h$

Including fringing field (spreads h on either side), $C_{pul} \approx \varepsilon(w + 2h)/h$

By Ampere's law, magnetic field is $Hw \approx I$, so $B = \mu_0 I/w$

Linked flux is $\Phi_{pul} = Bh = \mu_0 Ih/w$

Inductance is $L_{pul} = \Phi_{pul}/I = \mu_0 h/w$

Hence $Z_0 = (L_{pul}/C_{pul})^{1/2} \approx \{\mu_0 h/\varepsilon w(2 + w/h)\}^{1/2}$ - adjustable to value

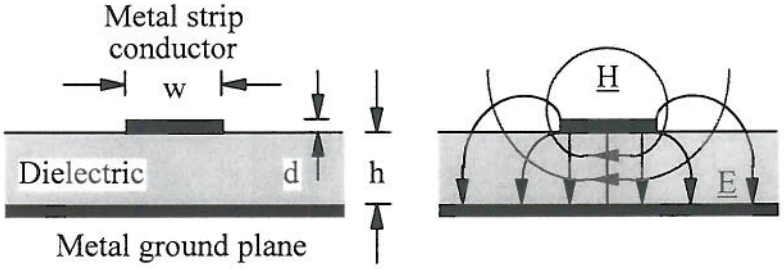

[5]

h) Microwave oven

A microwave oven is a method of heating food based on resonant absorption of

electromagnetic energy. The food is placed in a non-metallic container and a rotated on table inside the cooking chamber. A magnetron oscillator is used to generate high power (700 W) at 2.45 GHz, and energy is coupled into the cooking chamber by a tapered waveguide horn. A standing wave pattern is set up inside the cooking chamber and the pattern is 'stirred' using a metal paddle to avoid cold spots.

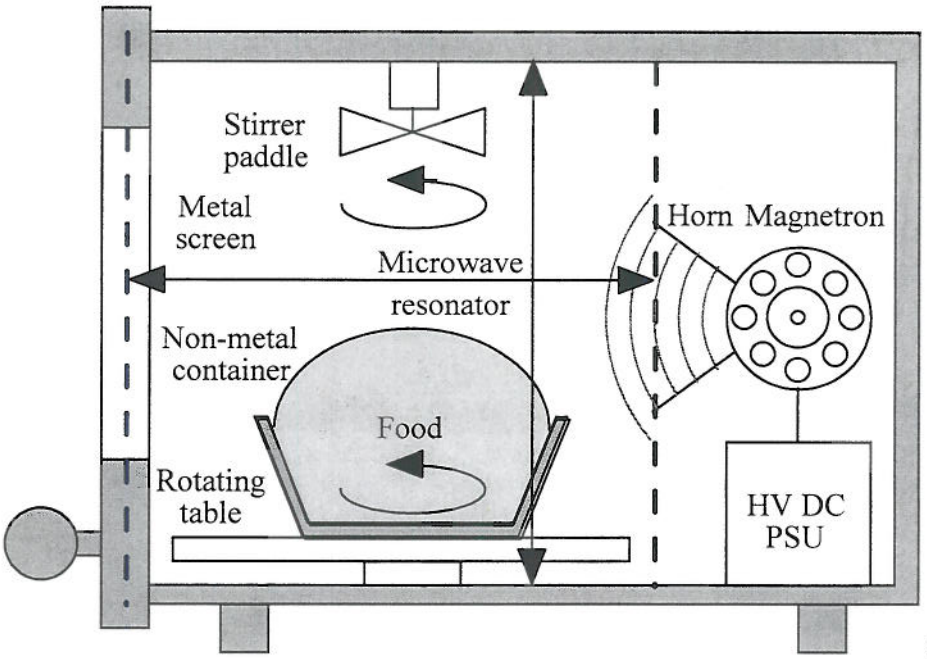

[5]

5. For the nth section, Kirchhoff's current and voltage laws give:

$V_{n+1} = V_n - j\omega L I_n$

$I_{n+1} = I_n - j\omega C V_{n+1}$ **[5]**

Assuming the travelling wave solutions $V_n = V_0 \exp(-jnka)$ and $I_n = I_0 \exp(-jnka)$ we get:

$V_0 \exp(-jka) = V_0 - j\omega L I_0$

$I_0 \exp(-jka) = I_0 - j\omega C V_0 \exp(-jka)$

Re-arranging, we get:

$\{\exp(-jka) - 1\} V_0 + j\omega L I_0 = 0$

$j\omega C \exp(-jka) V_0 + \{\exp(-jka) - 1\} I_0 = 0$

These are two simultaneous equations with two unknowns. For a solution, we need:

$\{\exp(-jka) - 1\}^2 + \omega^2 LC \exp(-jka) = 0$, or $2\{\cos(ka) - 1\} + \omega^2 LC = 0$

Hence $\omega^2/\omega_0^2 = 2\{1 - \cos(ka)\} = 4 \sin^2(ka/2)$ where $\omega_0^2 = 1/LC$

Hence $\omega/\omega_0 = 2 \sin(ka/2)$ and the ω-k diagram is a sinusoid, as shown below. **[10]**

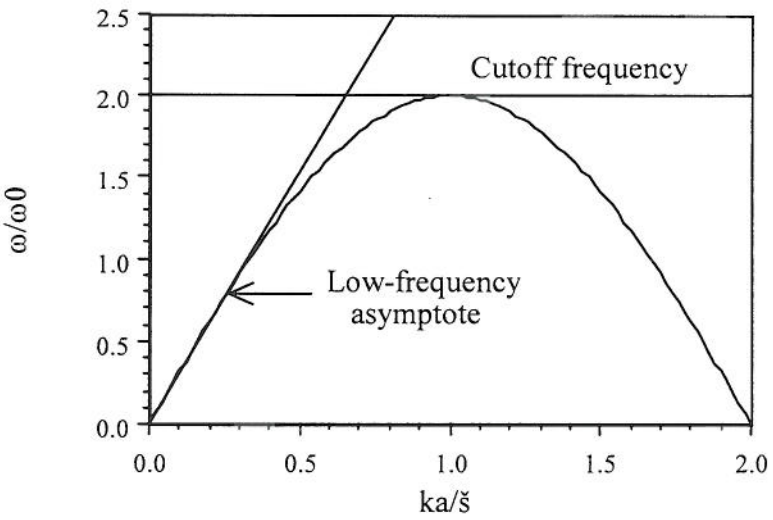

[6]

The maximum angular frequency that can propagate is $\omega = 2\omega_0$, when $ka = \pi$. **[3]**

For small ka, $\omega/\omega_0 \approx ka$; hence, the low frequency asymptote is a straight line.

Hence, the phase velocity is $v_{ph} = \omega/k = \omega_0 a$ **[3]**

Substituting for ω_0 we get $v_{ph} = a/\sqrt{(LC)} = \sqrt{(a^2/LC}$

Hence $v_{ph} = 1/\sqrt{(L'C')}$ where $L' = L/a$ and $C' = C/a$ are the inductance and capacitance p.u.l. **[3]**

6. The thickness of glass at a radial distance R is $t = d - \{r_1 [1 - \cos(\theta_1)] + r_2 [1 - \cos(\theta_2)]\}$

Using small angle approximations, $t = d - (R^2/2)(1/r_1 + 1/r_2)$

The optical thickness is then $d = n \times t + 1 \times (d - t) = nd - (n - 1)(R^2/2)(1/r_1 + 1/r_2)$

The transfer function $\tau_L = \exp(-jk_0 d)$ is then $\tau_L = \tau_s \exp[+jk_0(n - 1)(R^2/2)(1/r_1 + 1/r_2)]$

Here $\tau_s = \exp(-jk_0 nd)$ is the transfer function of a parallel sided slab of thickness d

This can be written as $\tau_L = \tau_s \exp(+jk_0 R^2/2f)$ where $1/f = (n - 1)(1/r_1 + 1/r_2)$

[8]

a) Referring to the figure below: A spherical wave is $E(r) = E_0/r \exp(-jk_0 r)$

At a distance z, $r^2 = z^2 + R^2$ where $R^2 = x^2 + y^2$. For small R, $r = z \div (1 + R^2/z^2) \approx z + R^2/2z$

Approximate the phase by $\exp(-jk_0 r) \approx \exp(-jk_0 z) \,.\, \exp(-jk_0 R^2/2z)$

Approximate the amplitude by $E_0/r \approx E_0/z$

Paraxial wave is therefore $E = E_0/z \exp(-jk_0 R^2/2z) \,.\, \exp(-jk_0 z) \approx A(z) \exp(-jk_0 R^2/2z)$

Similarly, a converging wave is $E'(R, z) \approx A'(z) \exp(+jk_0 R^2/2z)$

[8]

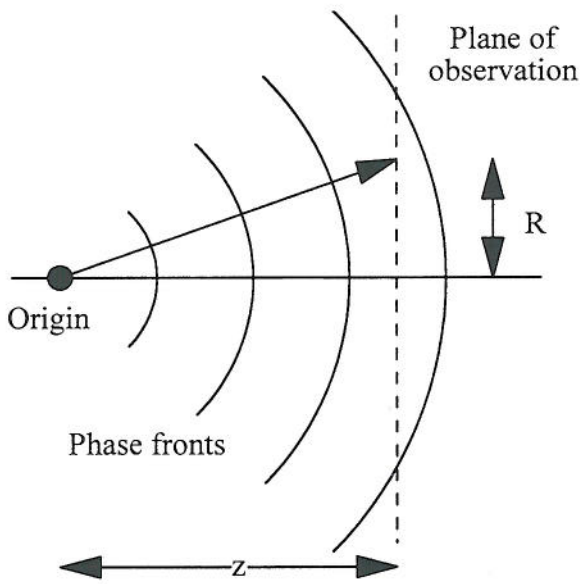

c) For an object point at u, assume that the input to the lens is a paraxial wave given by

$E_{in} = A(u) \exp(-jk_0 R^2/2u)$

The output wave is found by multiplying the input by τ_L, to get:

$E_{out} = \tau_L E_{in} = A(u) \tau_s \exp(+jk_0 R^2/2f) \exp(-jk_0 R^2/2u)$

Since this epression contains an R^2 variation, it is also a paraxial wave

If we write the output as $E_{out} = A'(u) \exp(+jk_0R^2/2v)$ where $A'(u)= A(u)\ \tau_s$

Then the image position must be given by $1/v = 1/f - 1/u$. **[7]**

d) The focal lengths of the four lenses can be calculated as shown in Table I.

Lens	Refractive index	Surface 1	Radius 1	Surface 2	Radius 2	Focal length
1	1.5	Convex	200 mm	Convex	200 mm	200 mm
2	1.5	Convex	400 mm	Plane	Infinity	800 mm
3	1.5	Concave	200 mm	Concave	200 mm	-200 mm
4	1.5	Concave	400 mm	Plane	Infinity	-800 mm

[4]

Since $1/v = 1f - 1/u$, for v to be positive (real image) given u positive (real object) we require:

$1/f > 1/u$ or $0 \leq f \leq u$.

If u = 400 mm, the only suitable choice is Lens 1. In this case, the image position can be found as:

$1/v = 1/200 - 1/400 = 1/400$

Hence, v = 400 mm