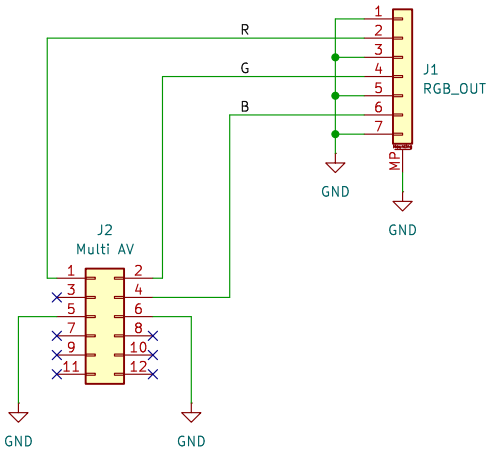

Designed by InnocuousMuffin
ThunderTechnologies

Sheet: /
File: MultiOut.kicad_sch

Title: MultOut QSB

Size: A4	Date: 2024-08-31	**Rev: 1**
KiCad E.D.A. 8.0.4		Id: 1/1