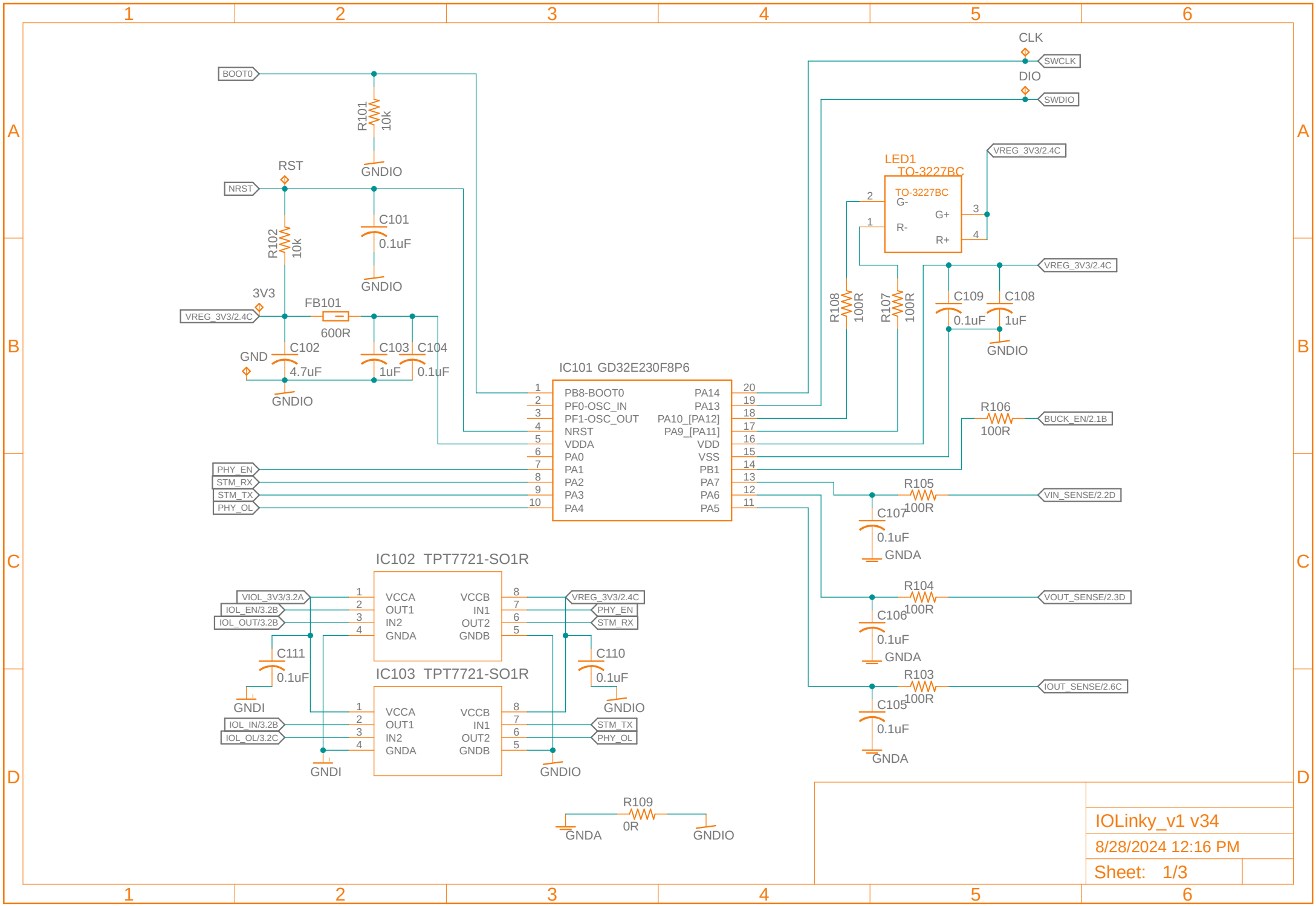
BOOT0
R101
10k
GNDIO
RST
NRST
R102
10k
C101
0.1uF
GNDIO
3V3
VREG_3V3/2.4C
FB101
600R
GND
C102
4.7uF
GNDIO
C103
1uF
C104
0.1uF
IC101 GD32E230F8P6
PB8-BOOT0
PF0-OSC_IN
PF1-OSC_OUT
NRST
VDDA
PA0
PA1
PA2
PA3
PA4
PA14
PA13
PA10_[PA12]
PA9_[PA11]
VDD
VSS
PB1
PA7
PA6
PA5
PHY_EN
STM_RX
STM_TX
PHY_OL
CLK
SWCLK
DIO
SWDIO
LED1
TO-3227BC
G-
G+
R-
R+
VREG_3V3/2.4C
R108
100R
R107
100R
C109
0.1uF
C108
1uF
GNDIO
R106
100R
BUCK_EN/2.1B
R105
100R
VIN_SENSE/2.2D
C107
0.1uF
GNDA
R104
100R
VOUT_SENSE/2.3D
C106
0.1uF
GNDA
R103
100R
IOUT_SENSE/2.6C
C105
0.1uF
GNDA
IC102 TPT7721-SO1R
VIOL_3V3/3.2A
IOL_EN/3.2B
IOL_OUT/3.2B
VCCA
OUT1
IN2
GNDA
VCCB
IN1
OUT2
GNDB
VREG_3V3/2.4C
PHY_EN
STM_RX
C111
0.1uF
GNDI
C110
0.1uF
GNDIO
IC103 TPT7721-SO1R
IOL_IN/3.2B
IOL_OL/3.2C
STM_TX
PHY_OL
GNDI
GNDIO
R109
0R
GNDA
GNDIO
IOLinky_v1 v34
8/28/2024 12:16 PM
Sheet: 1/3

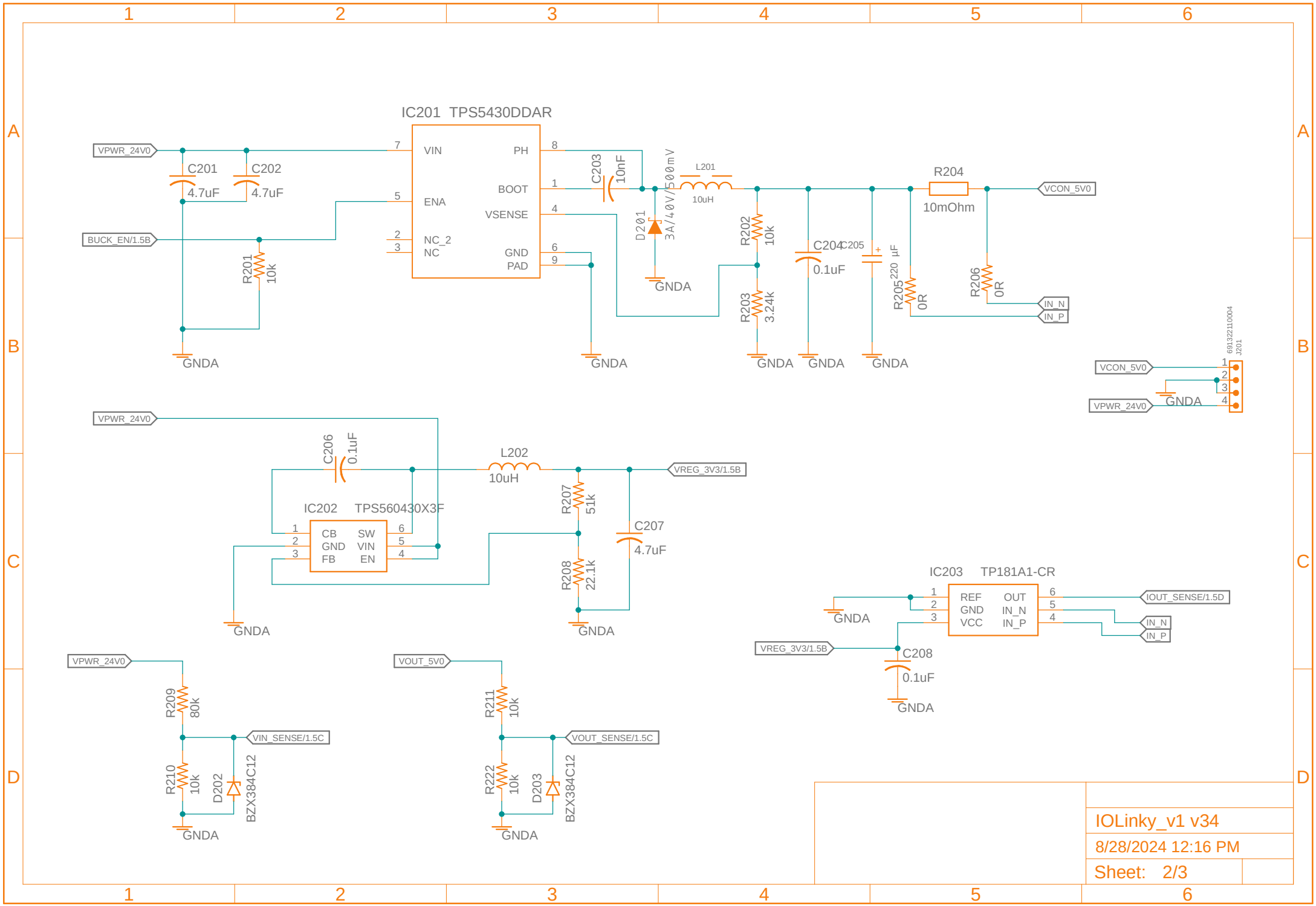

IOLinky_v1 v34

8/28/2024 12:16 PM

Sheet: 2/3

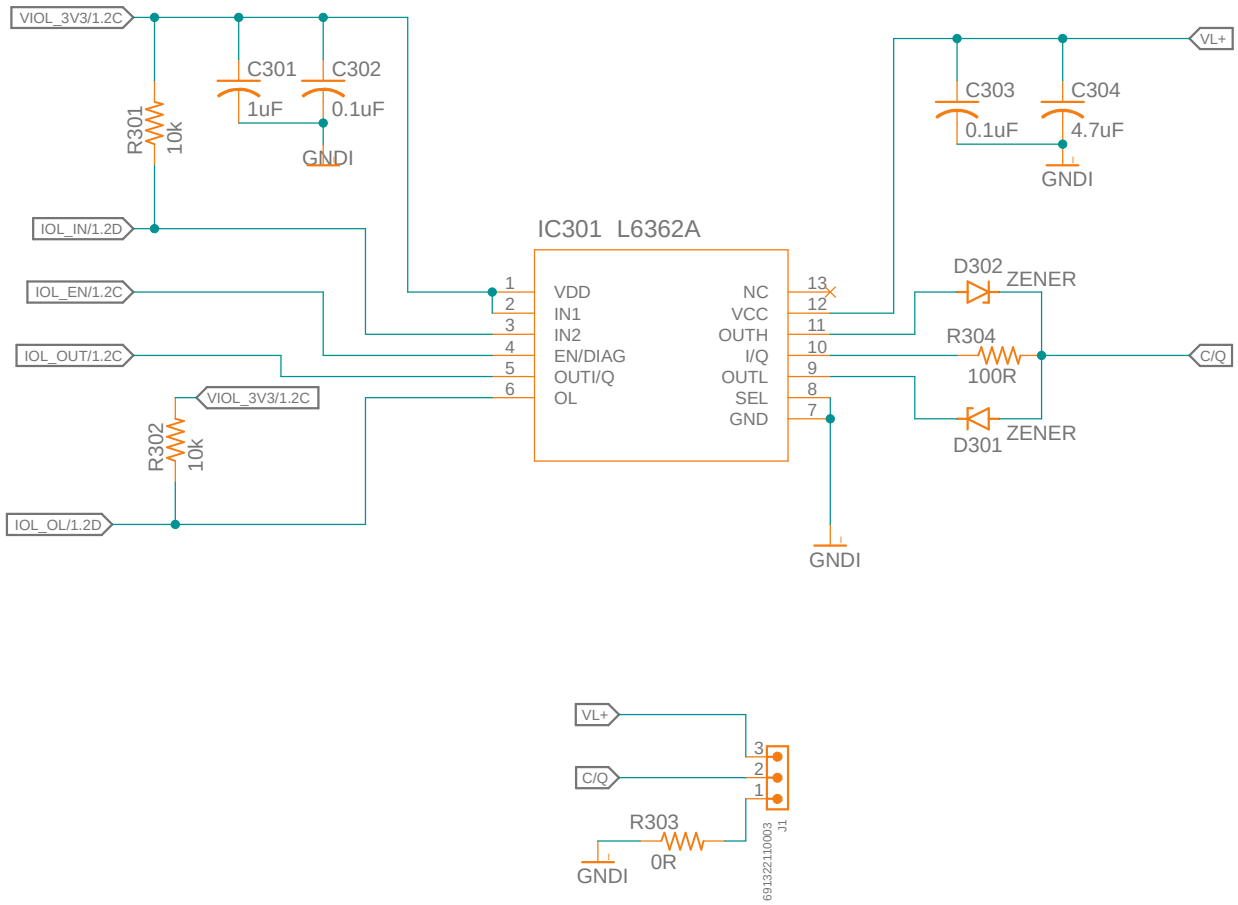

IOLinky_v1 v34

8/28/2024 12:16 PM

Sheet: 3/3