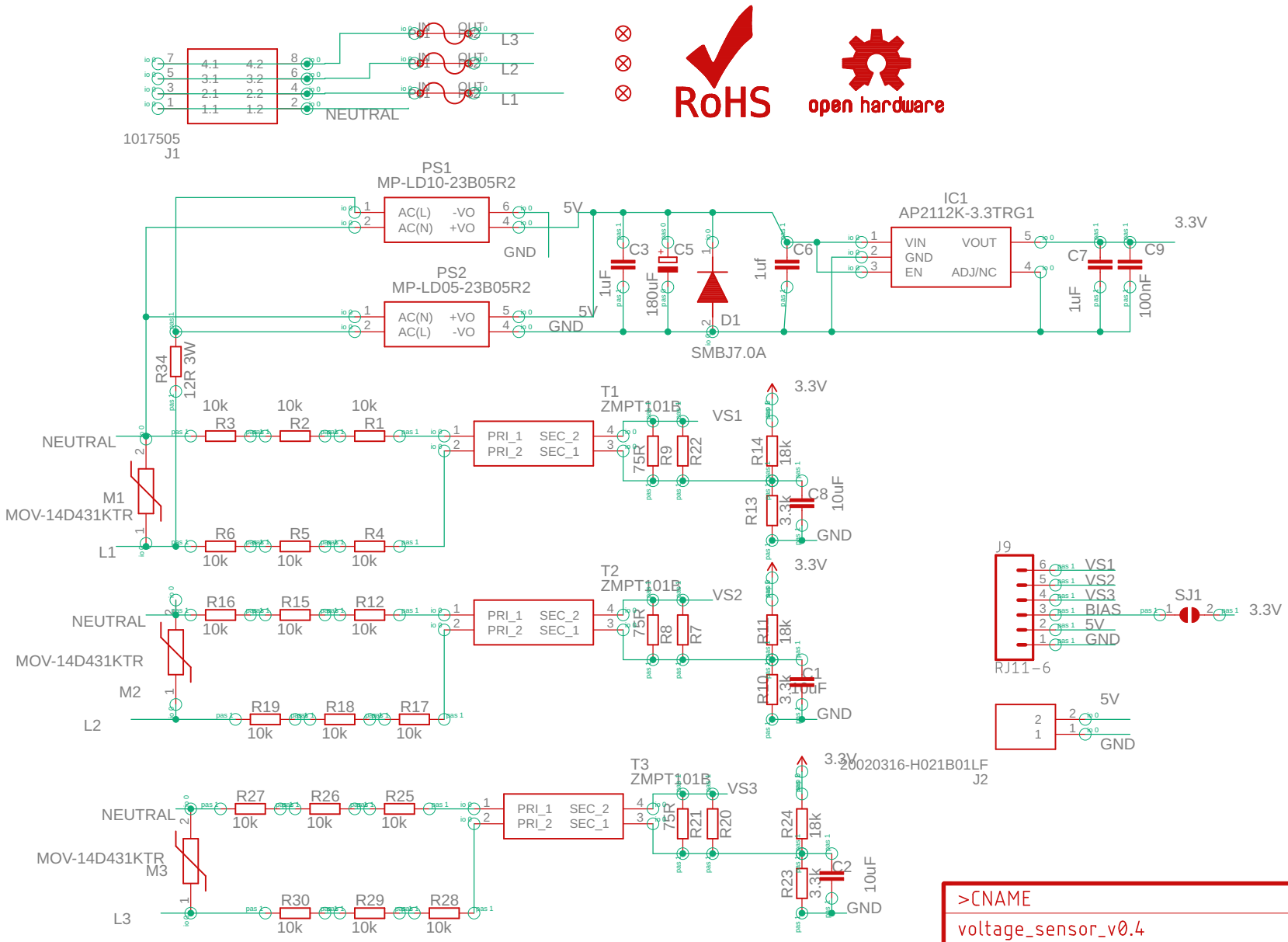

>CNAME	
voltage_sensor_v0.4	
18/05/2022 15:53	
Sheet: 1/1	Rev: >CREVISION