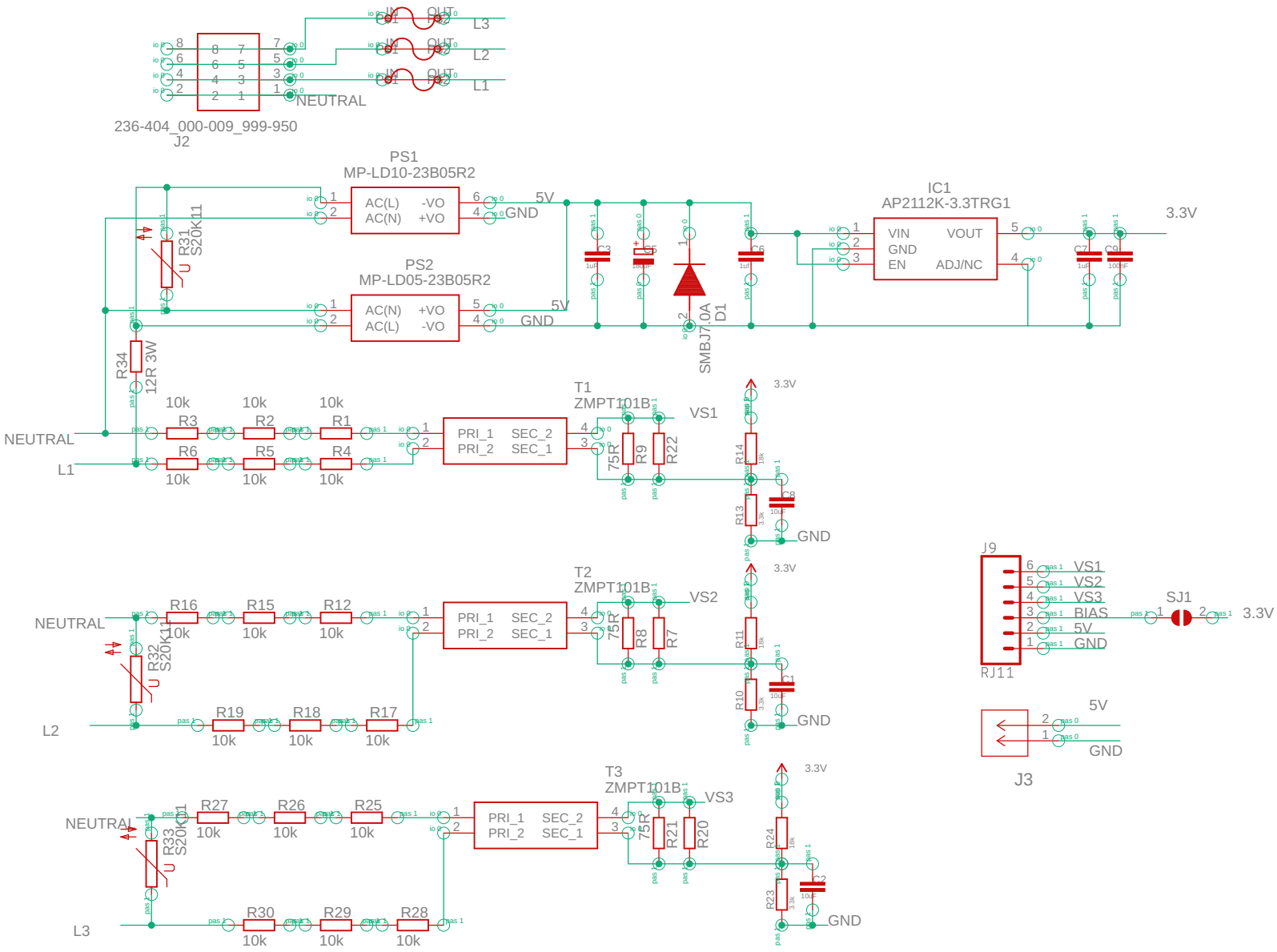
236-404_000-009_999-950
J2
NEUTRAL
L3
L2
L1
PS1
MP-LD10-23B05R2
AC(L) -VO
AC(N) +VO
PS2
MP-LD05-23B05R2
AC(N) +VO
AC(L) -VO
5V
GND
R31
S20K11
R34
12R 3W
SMBJ7.0A
D1
IC1
AP2112K-3.3TRG1
VIN
GND
EN
VOUT
ADJ/NC
3.3V
C3
C5
C6
C7
C9
10uF
T1
ZMPT101B
PRI_1
PRI_2
SEC_2
SEC_1
VS1
R3
R2
R1
R6
R5
R4
R9
R22
R14
R13
C8
T2
ZMPT101B
VS2
R16
R15
R12
R19
R18
R17
R8
R7
R11
R10
C1
R32
S20K11
T3
ZMPT101B
VS3
R27
R26
R25
R30
R29
R28
R21
R20
R24
R23
C2
R33
S20K11
J9
RJ11
VS1
VS2
VS3
BIAS
5V
GND
SJ1
J3