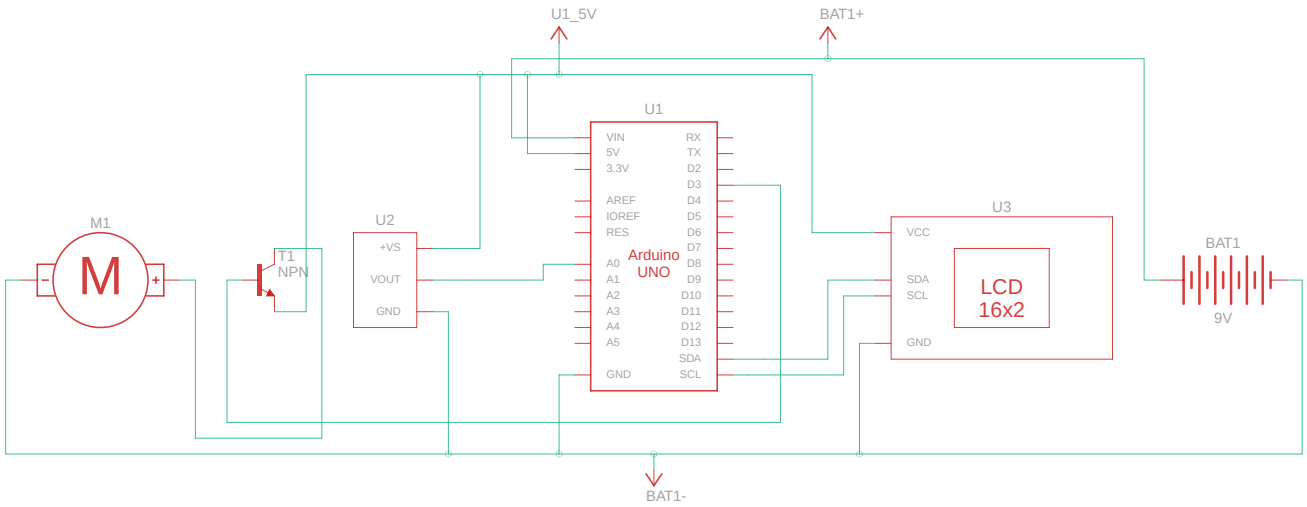


Made with Tinkercad®

| | |
|---|---|
| Title: Question 2 (LCD display) | |
| Date: 2025/07/10, 18:54:12 | Sheet: 1/1 |