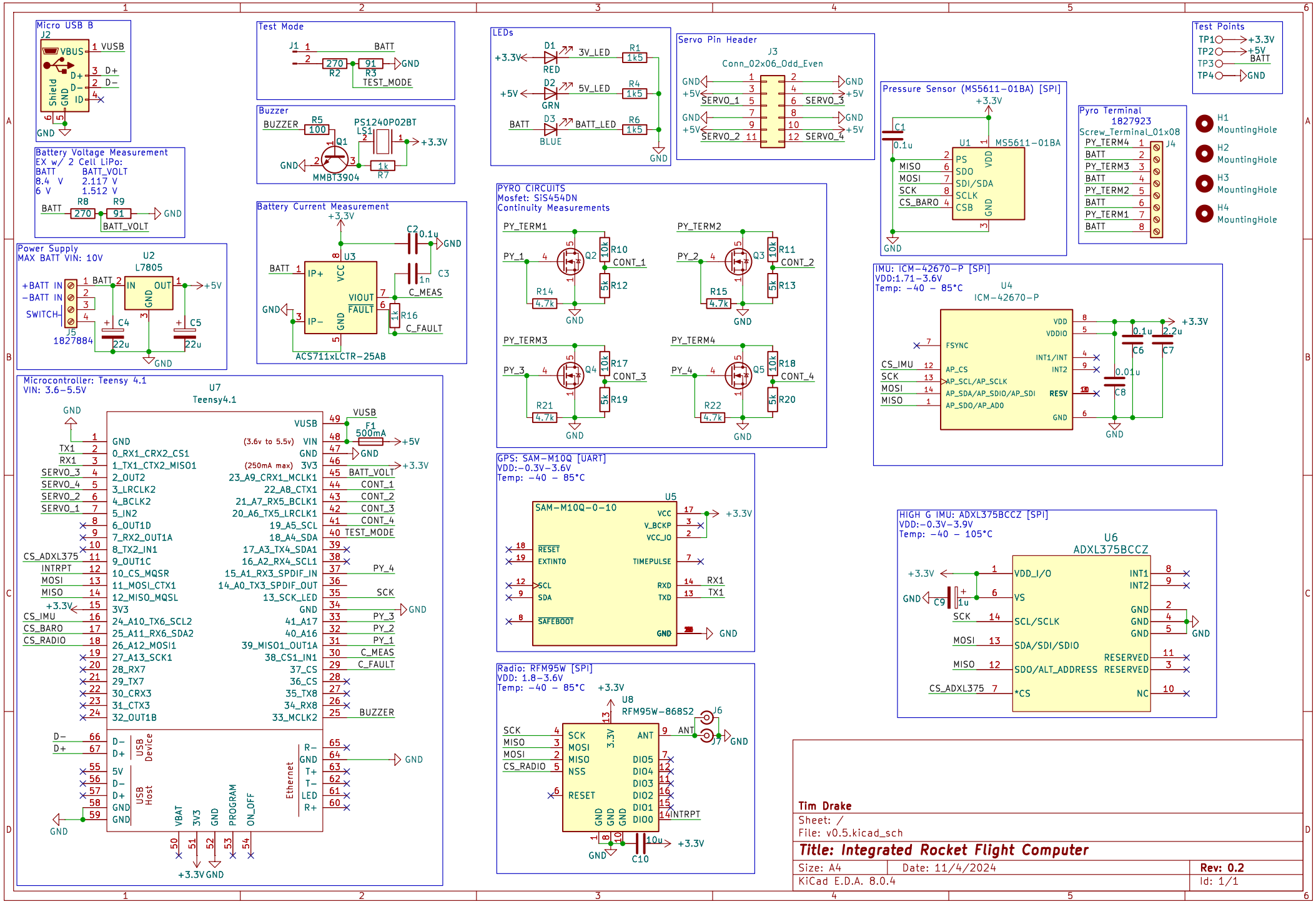
Micro USB B
J2
VBUS
Shield
GND
D+
D−
ID
VUSB
Test Mode
J1
BATT
270
R2
91
R3
TEST_MODE
Buzzer
BUZZER
R5
100
PS1240P02BT
LS1
Q1
MMBT3904
1k
R7
+3.3V
Battery Voltage Measurement
EX w/ 2 Cell LiPo:
BATT BATT_VOLT
8.4 V 2.117 V
6 V 1.512 V
R8
R9
BATT_VOLT
Power Supply
MAX BATT VIN: 10V
U2
L7805
+BATT IN
−BATT IN
SWITCH
J5
1827884
IN
OUT
GND
C4
22u
C5
22u
+5V
Battery Current Measurement
+3.3V
C2
0.1u
U3
IP+
IP−
VCC
VIOUT
FAULT
C3
1n
C_MEAS
R16
C_FAULT
ACS711xLCTR−25AB
Microcontroller: Teensy 4.1
VIN: 3.6−5.5V
U7
Teensy4.1
F1
500mA
(3.6v to 5.5v) VIN
(250mA max) 3V3
BATT_VOLT
CONT_1
CONT_2
CONT_3
CONT_4
TEST_MODE
PY_4
SCK
PY_3
PY_2
PY_1
C_MEAS
C_FAULT
BUZZER
CS_ADXL375
INTRPT
MOSI
MISO
CS_IMU
CS_BARO
CS_RADIO
SERVO_3
SERVO_4
SERVO_2
SERVO_1
USB Device
USB Host
Ethernet
VBAT
3V3
PROGRAM
ON_OFF
LEDs
D1
3V_LED
R1
1k5
RED
D2
5V_LED
R4
GRN
D3
BATT_LED
R6
BLUE
Servo Pin Header
J3
Conn_02x06_Odd_Even
SERVO_1
SERVO_2
SERVO_3
SERVO_4
PYRO CIRCUITS
Mosfet: SiS454DN
Continuity Measurements
PY_TERM1
PY_TERM2
PY_TERM3
PY_TERM4
Q2
Q3
Q4
Q5
R10
R11
R17
R18
10k
R12
R13
R19
R20
5k
R14
R15
R21
R22
4.7k
CONT_1
CONT_2
CONT_3
CONT_4
GPS: SAM−M10Q [UART]
VDD:−0.3V−3.6V
Temp: −40 − 85°C
U5
SAM−M10Q−0−10
VCC
V_BCKP
VCC_IO
RESET
EXTINT0
TIMEPULSE
SCL
SDA
RXD
TXD
SAFEBOOT
RX1
TX1
Radio: RFM95W [SPI]
VDD: 1.8−3.6V
Temp: −40 − 85°C
U8
RFM95W−868S2
ANT
J6
J7
DIO5
DIO4
DIO3
DIO2
DIO1
DIO0
NSS
RESET
INTRPT
C10
10u
Pressure Sensor (MS5611−01BA) [SPI]
C1
0.1u
U1
MS5611−01BA
PS
SDO
SDI/SDA
SCLK
CSB
VDD
Pyro Terminal
1827923
Screw_Terminal_01x08
J4
PY_TERM4
PY_TERM3
PY_TERM2
PY_TERM1
BATT
IMU: ICM−42670−P [SPI]
VDD:1.71−3.6V
Temp: −40 − 85°C
U4
ICM−42670−P
FSYNC
AP_CS
AP_SCL/AP_SCLK
AP_SDA/AP_SDIO/AP_SDI
AP_SDO/AP_AD0
VDDIO
INT1/INT
INT2
RESV
0.1u
2.2u
C6
C7
0.01u
C8
HIGH G IMU: ADXL375BCCZ [SPI]
VDD:−0.3V−3.9V
Temp: −40 − 105°C
U6
ADXL375BCCZ
VDD_I/O
VS
SCL/SCLK
SDA/SDI/SDIO
SDO/ALT_ADDRESS
*CS
INT1
INT2
RESERVED
NC
C9
1u
Test Points
TP1
TP2
TP3
TP4
H1
MountingHole
H2
MountingHole
H3
MountingHole
H4
MountingHole
Tim Drake
Sheet: /
File: v0.5.kicad_sch
Title: Integrated Rocket Flight Computer
Size: A4
Date: 11/4/2024
Rev: 0.2
KiCad E.D.A. 8.0.4
Id: 1/1