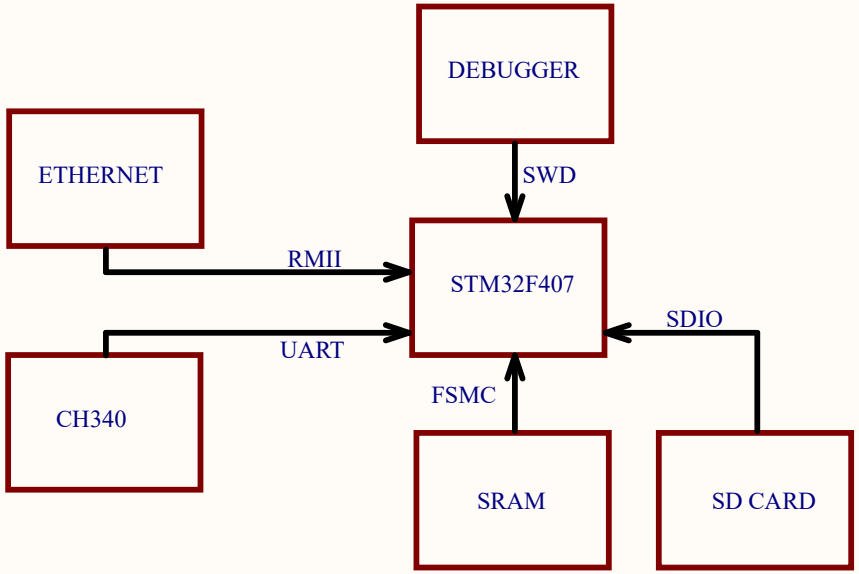
DEBUGGER
SWD
ETHERNET
RMII
STM32F407
SDIO
UART
CH340
FSMC
SRAM
SD CARD

KHỐI NGUỒN

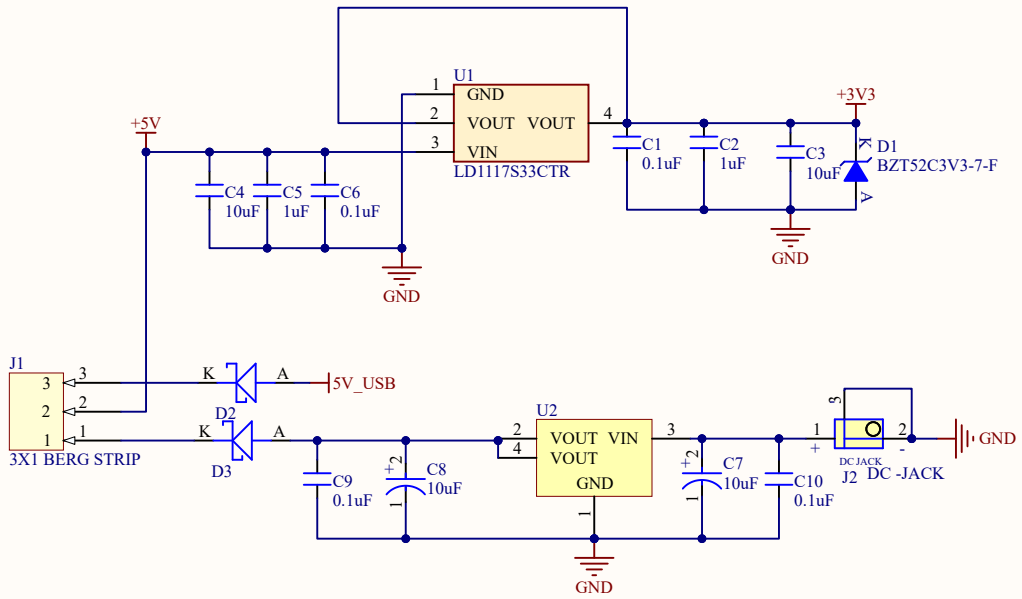
U1
GND
VOUT VOUT
VIN
LD1117S33CTR
+5V
C4
10uF
C5
1uF
C6
0.1uF
GND
C1
0.1uF
C2
1uF
C3
10uF
+3V3
D1
BZT52C3V3-7-F
GND
J1
3X1 BERG STRIP
D2
D3
5V_USB
C9
0.1uF
C8
10uF
U2
VOUT VIN
VOUT
GND
C7
10uF
C10
0.1uF
J2
DC JACK
DC -JACK
GND

ST-Link V2

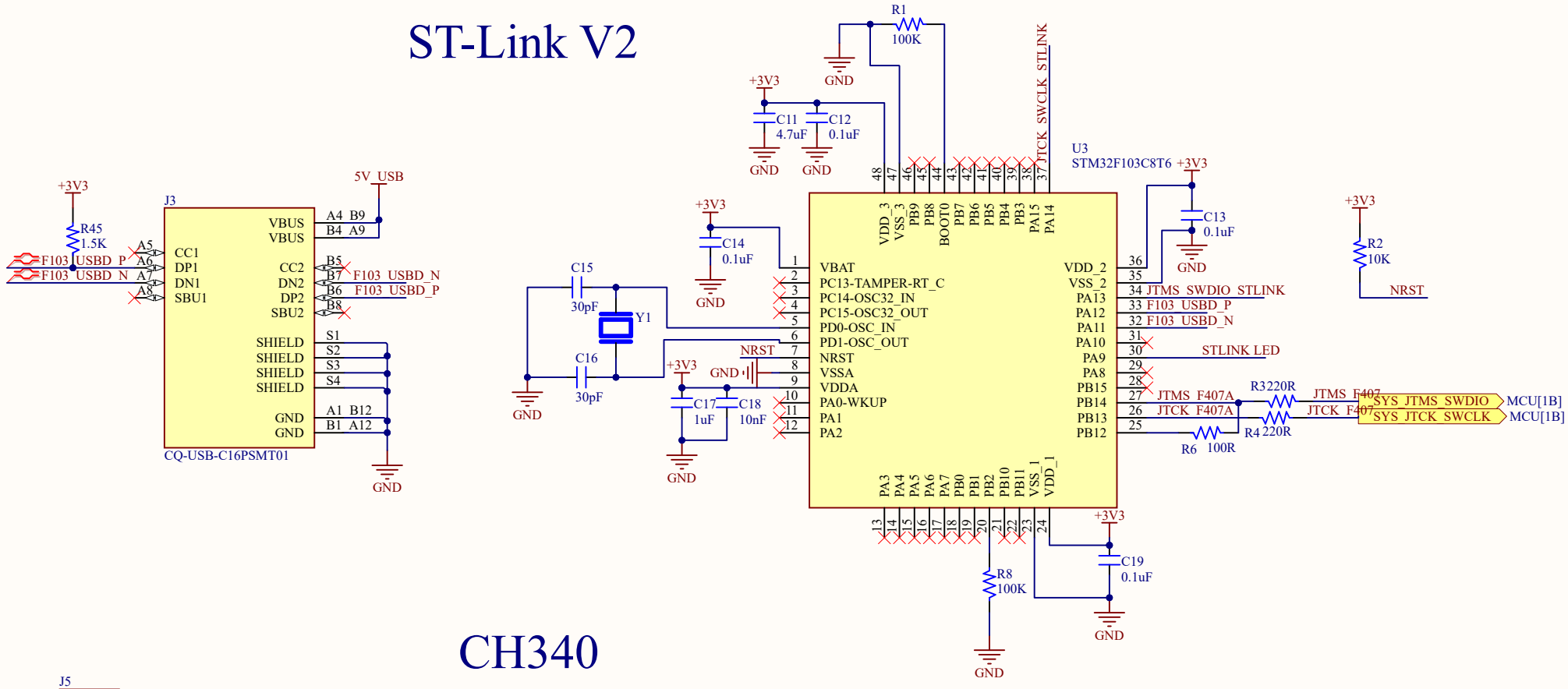

CH340

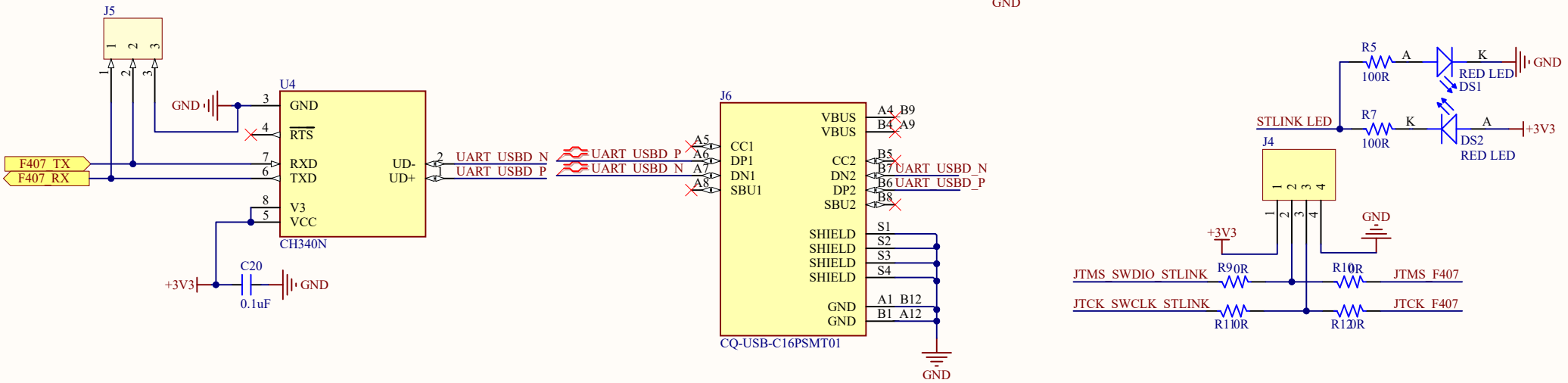

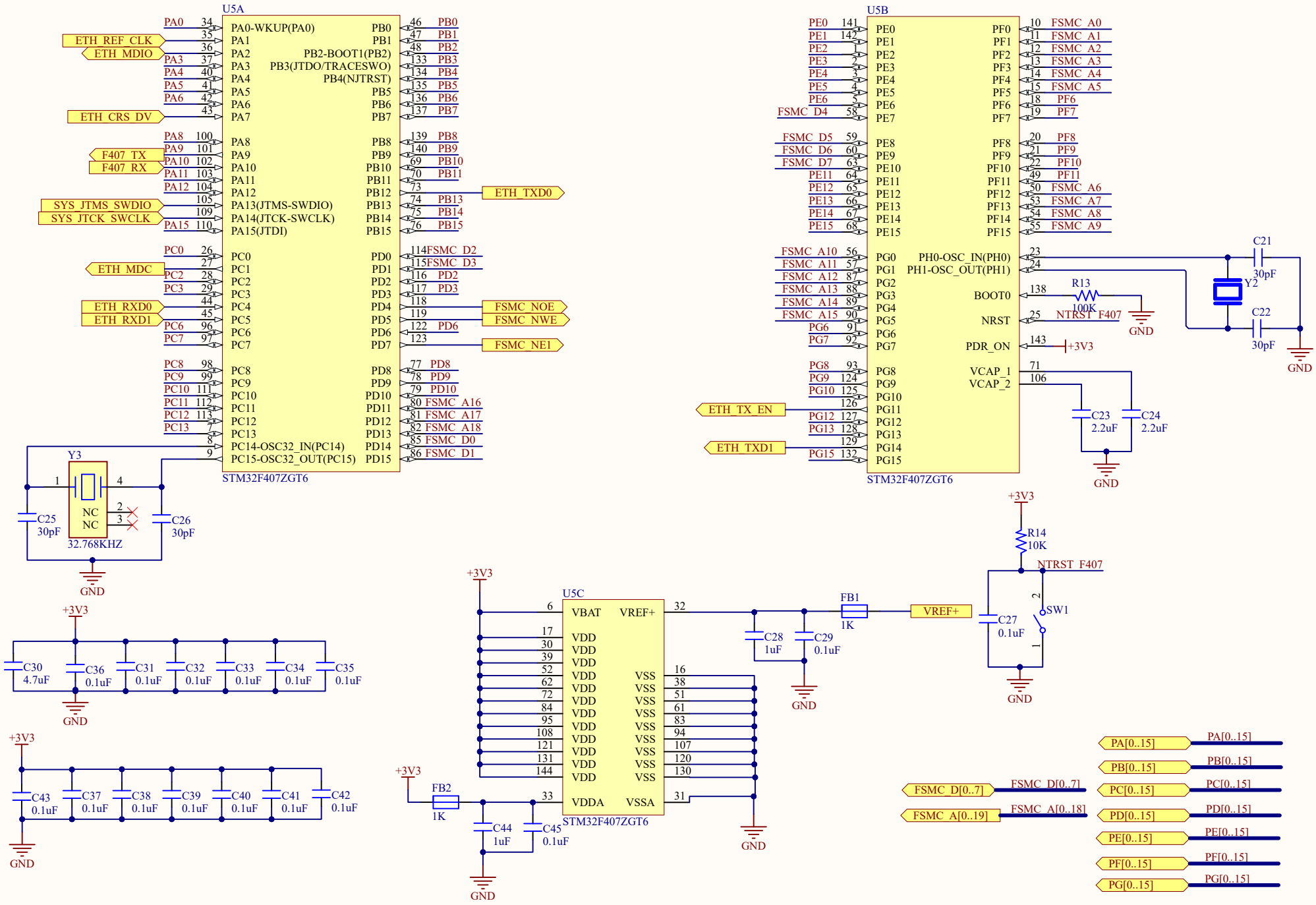
U5A
STM32F407ZGT6
PA0-WKUP(PA0)
PA1
PA2
PA3
PA4
PA5
PA6
PA7
PA8
PA9
PA10
PA11
PA12
PA13(JTMS-SWDIO)
PA14(JTCK-SWCLK)
PA15(JTDI)
PC0
PC1
PC2
PC3
PC4
PC5
PC6
PC7
PC8
PC9
PC10
PC11
PC12
PC13
PC14-OSC32_IN(PC14)
PC15-OSC32_OUT(PC15)
PB0
PB1
PB2-BOOT1(PB2)
PB3(JTDO/TRACESWO)
PB4(NJTRST)
PB5
PB6
PB7
PB8
PB9
PB10
PB11
PB12
PB13
PB14
PB15
PD0
PD1
PD2
PD3
PD4
PD5
PD6
PD7
PD8
PD9
PD10
PD11
PD12
PD13
PD14
PD15
ETH_REF_CLK
ETH_MDIO
ETH_CRS_DV
F407_TX
F407_RX
SYS_JTMS_SWDIO
SYS_JTCK_SWCLK
ETH_MDC
ETH_RXD0
ETH_RXD1
ETH_TXD0
FSMC_D2
FSMC_D3
FSMC_NOE
FSMC_NWE
FSMC_NE1
FSMC_A16
FSMC_A17
FSMC_A18
FSMC_D0
FSMC_D1
U5B
STM32F407ZGT6
PE0
PE1
PE2
PE3
PE4
PE5
PE6
PE7
PE8
PE9
PE10
PE11
PE12
PE13
PE14
PE15
PG0
PG1
PG2
PG3
PG4
PG5
PG6
PG7
PG8
PG9
PG10
PG11
PG12
PG13
PG14
PG15
PF0
PF1
PF2
PF3
PF4
PF5
PF6
PF7
PF8
PF9
PF10
PF11
PF12
PF13
PF14
PF15
PH0-OSC_IN(PH0)
PH1-OSC_OUT(PH1)
BOOT0
NRST
PDR_ON
VCAP_1
VCAP_2
FSMC_A0
FSMC_A1
FSMC_A2
FSMC_A3
FSMC_A4
FSMC_A5
FSMC_A6
FSMC_A7
FSMC_A8
FSMC_A9
FSMC_D4
FSMC_D5
FSMC_D6
FSMC_D7
FSMC_A10
FSMC_A11
FSMC_A12
FSMC_A13
FSMC_A14
FSMC_A15
ETH_TX_EN
ETH_TXD1
NTRST_F407
+3V3
GND
C21
30pF
C22
30pF
Y2
R13
100K
C23
2.2uF
C24
2.2uF
Y3
NC
NC
32.768KHZ
C25
30pF
C26
30pF
R14
10K
SW1
C27
0.1uF
FB1
1K
VREF+
C28
1uF
C29
0.1uF
U5C
STM32F407ZGT6
VBAT
VREF+
VDD
VSS
VDDA
VSSA
FB2
1K
C44
1uF
C45
0.1uF
C30
4.7uF
C36
0.1uF
C31
0.1uF
C32
0.1uF
C33
0.1uF
C34
0.1uF
C35
0.1uF
C43
0.1uF
C37
0.1uF
C38
0.1uF
C39
0.1uF
C40
0.1uF
C41
0.1uF
C42
0.1uF
PA[0..15]
PB[0..15]
PC[0..15]
PD[0..15]
PE[0..15]
PF[0..15]
PG[0..15]
FSMC_D[0..7]
FSMC_A[0..19]
FSMC_D[0..7]
FSMC_A[0..18]

DP83848

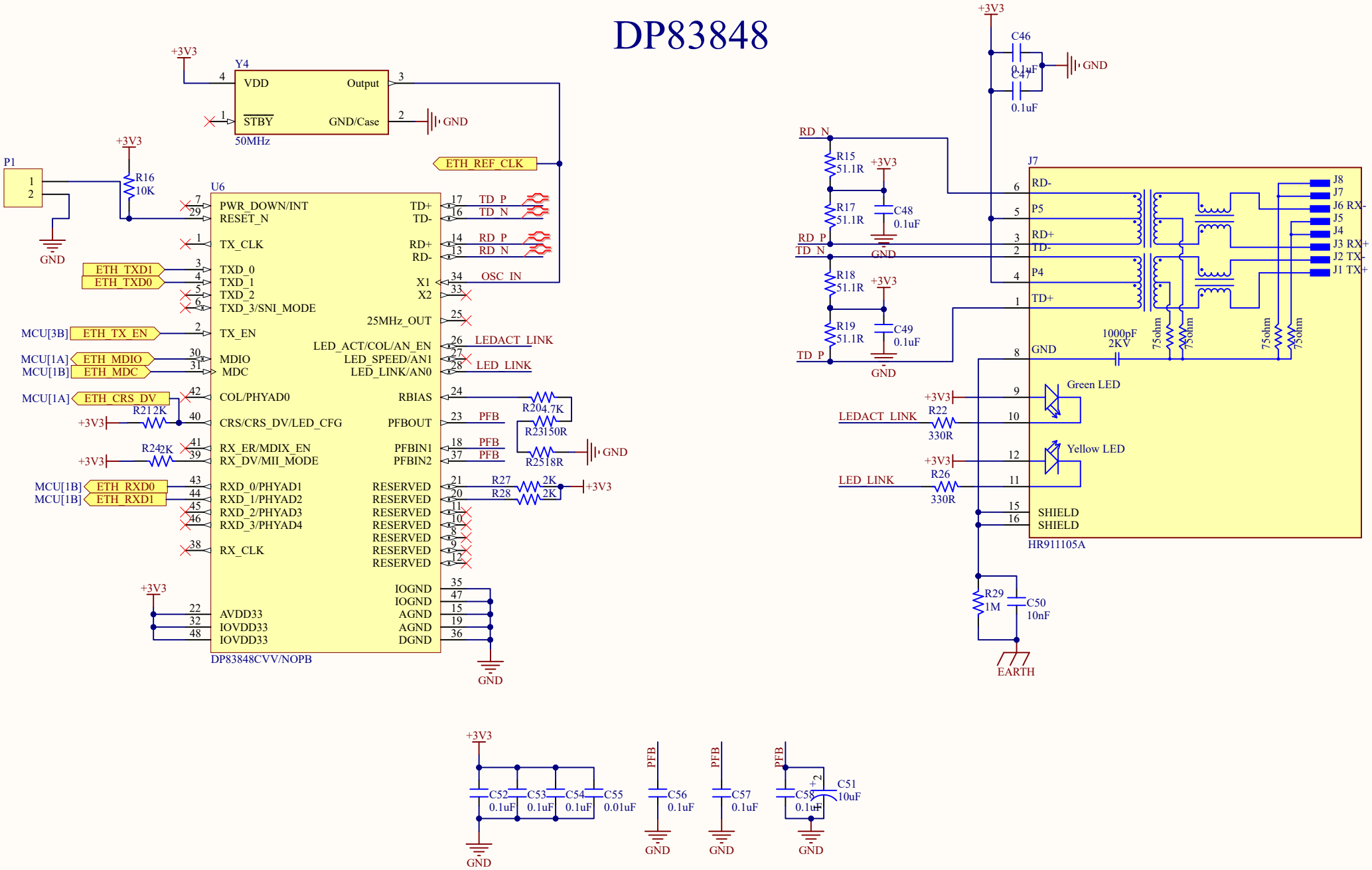
Y4
VDD
Output
STBY
GND/Case
50MHz
+3V3
GND
P1
R16
10K
U6
PWR_DOWN/INT
RESET_N
TX_CLK
TXD_0
TXD_1
TXD_2
TXD_3/SNI_MODE
TX_EN
MDIO
MDC
COL/PHYAD0
CRS/CRS_DV/LED_CFG
RX_ER/MDIX_EN
RX_DV/MII_MODE
RXD_0/PHYAD1
RXD_1/PHYAD2
RXD_2/PHYAD3
RXD_3/PHYAD4
RX_CLK
AVDD33
IOVDD33
IOVDD33
TD+
TD-
RD+
RD-
X1
X2
25MHz_OUT
LED_ACT/COL/AN_EN
LED_SPEED/AN1
LED_LINK/AN0
RBIAS
PFBOUT
PFBIN1
PFBIN2
RESERVED
IOGND
IOGND
AGND
AGND
DGND
DP83848CVV/NOPB
ETH_REF_CLK
ETH_TXD1
ETH_TXD0
MCU[3B] ETH_TX_EN
MCU[1A] ETH_MDIO
MCU[1B] ETH_MDC
MCU[1A] ETH_CRS_DV
R212K
R242K
MCU[1B] ETH_RXD0
MCU[1B] ETH_RXD1
TD_P
TD_N
RD_P
RD_N
OSC_IN
LEDACT_LINK
LED_LINK
R204.7K
R23150R
R2518R
PFB
R27 2K
R28 2K
R15 51.1R
R17 51.1R
R18 51.1R
R19 51.1R
C48 0.1uF
C49 0.1uF
C46 0.1uF
C47 0.1uF
J7
RD-
P5
RD+
TD-
P4
TD+
GND
SHIELD
SHIELD
HR911105A
J8
J7
J6 RX-
J5
J4
J3 RX+
J2 TX-
J1 TX+
1000pF 2KV
75ohm
Green LED
Yellow LED
R22 330R
R26 330R
R29 1M
C50 10nF
EARTH
C52 0.1uF
C53 0.1uF
C54 0.1uF
C55 0.01uF
C56 0.1uF
C57 0.1uF
C58 0.1uF
C51 10uF
PFB
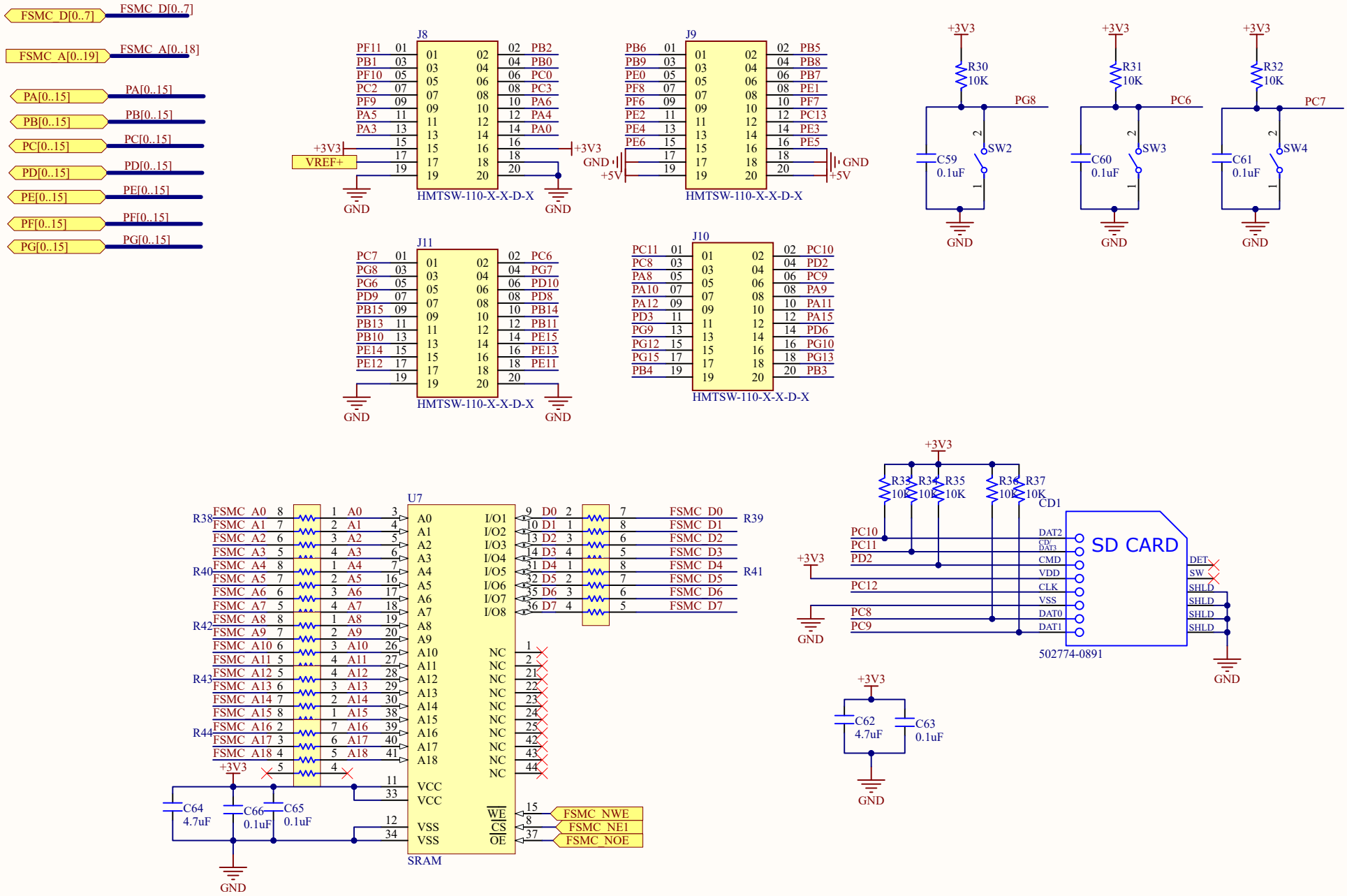
GPIO HEADER + SRAM