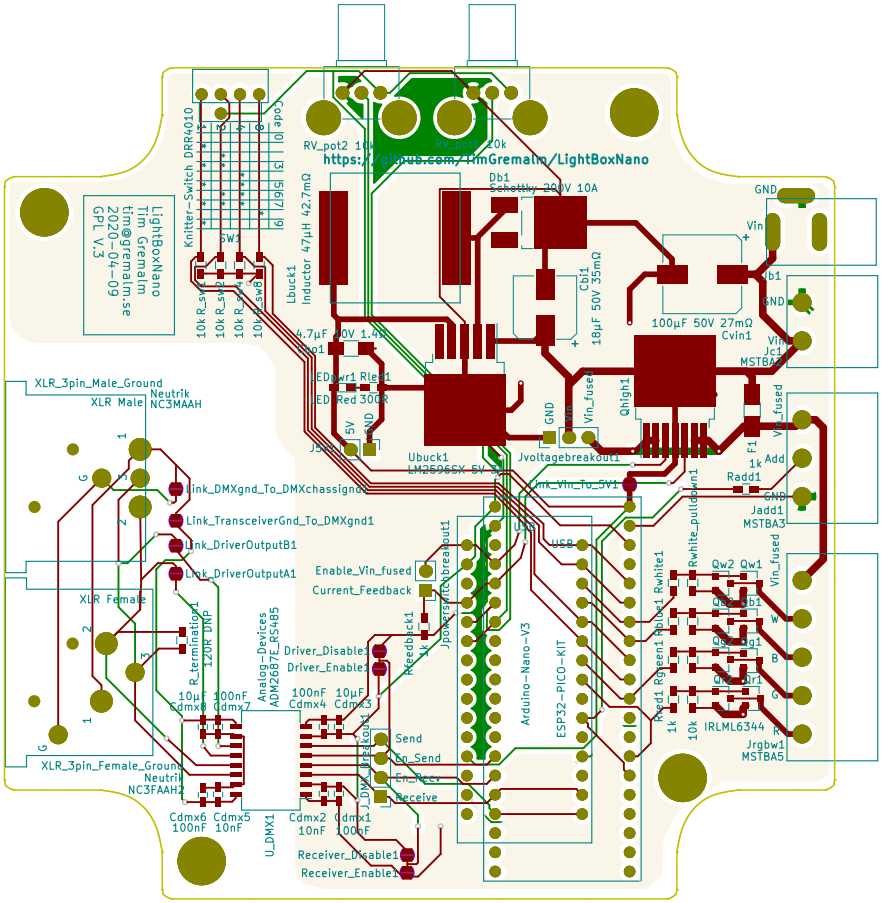

Sheet:
File: LightBoxNano.kicad_pcb

Title:

Size: A4	Date:	**Rev:**
KiCad E.D.A. kicad (5.1.5)-2		Id: 1/1