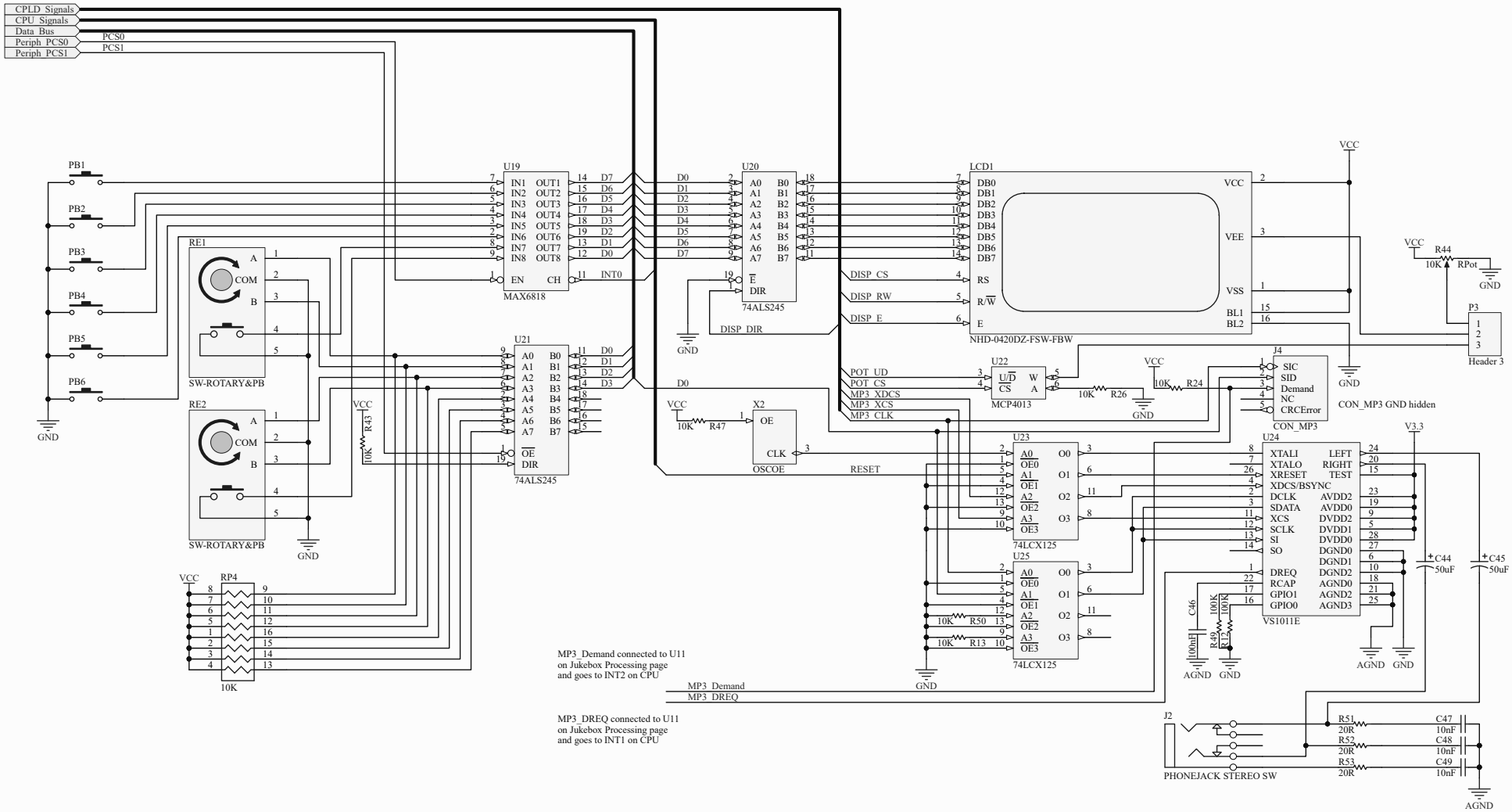

Title: Jukebox Peripherals		
Size: B	Number	Revision: 1.1
Date: 3/17/2016		Sheet 3of 5
File: C:\Users\..\Jukebox Peripherals.SchDoc		Drawn By: Tim Menninger