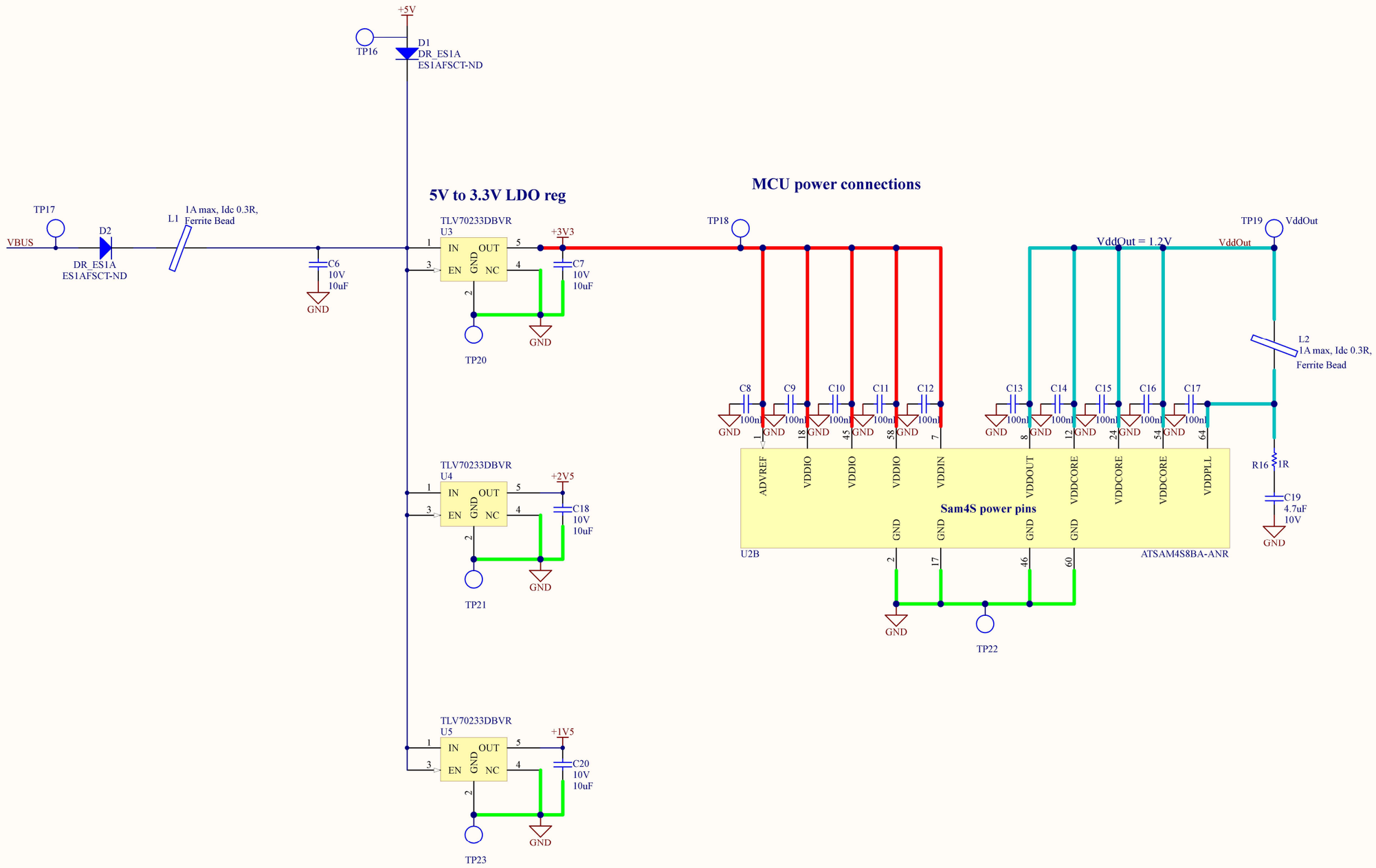

Title *Sam4S Power Distribution*		*ECE Department* *University of Canterbury* *Christchurch 8041* *New Zealand*
Drawn by Lakshay Duggal, Thomas Hu	Revision: 2	
Date: 3/8/2017 Time: 9:16:04 AM	Sheet 2 of 2	
File: H:\Courses\ENCE461\Altium\Camera Board\Camera Board\Power Distribution.SchDoc		

UNIVERSITY OF CANTERBURY
Te Whare Wānanga o Waitaha
CHRISTCHURCH NEW ZEALAND