CJMCU-MLX90614

http://CJMCU.taobao.com/

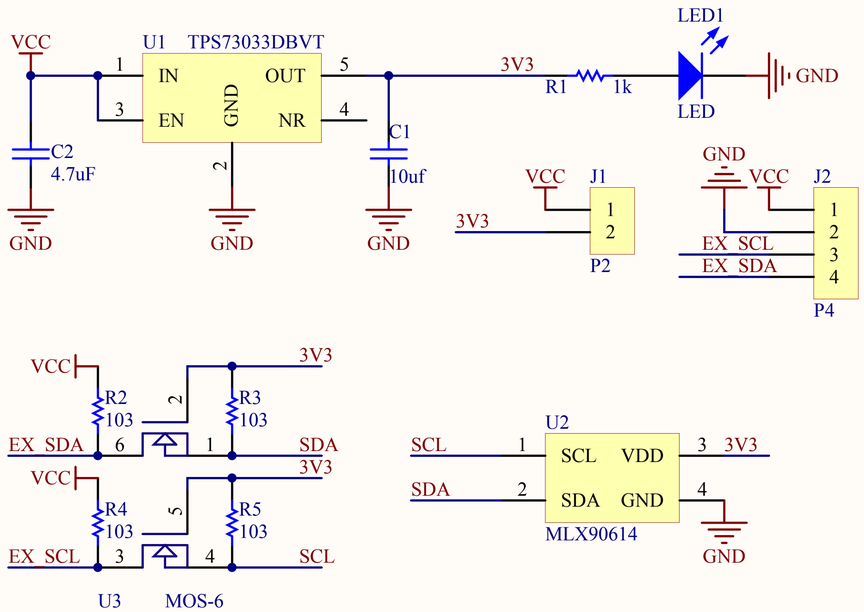

Title		
Size A4	Number	Revision
Date: 2014-9-12		Sheet of
File: M:\ \..\MLX90614.SchDoc		Drawn By: