**Cambridge International Examinations**
Cambridge International General Certificate of Secondary Education

| | |
|---|---|
| CANDIDATE NAME | |

| | | | | | | | | | | |
|---|---|---|---|---|---|---|---|---|---|---|
| CENTRE NUMBER | | | | | | CANDIDATE NUMBER | | | | |

*4054381962*

**CHEMISTRY** **0620/41**

Paper 4 Theory (Extended) **May/June 2016**

**1 hour 15 minutes**

Candidates answer on the Question Paper.

No Additional Materials are required.

**READ THESE INSTRUCTIONS FIRST**

Write your Centre number, candidate number and name on all the work you hand in.
Write in dark blue or black pen.
You may use an HB pencil for any diagrams or graphs.
Do not use staples, paper clips, glue or correction fluid.
DO **NOT** WRITE IN ANY BARCODES.

Answer **all** questions.
Electronic calculators may be used.
A copy of the Periodic Table is printed on page 16.
You may lose marks if you do not show your working or if you do not use appropriate units.

At the end of the examination, fasten all your work securely together.
The number of marks is given in brackets [ ] at the end of each question or part question.

The syllabus is approved for use in England, Wales and Northern Ireland as a Cambridge International Level 1/Level 2 Certificate.

This document consists of **16** printed pages.


© UCLES 2016

CAMBRIDGE International Examinations



www.exam-mate.com

**1** Protons, neutrons and electrons are subatomic particles.

**(a)** Complete the table to show the relative mass and relative charge of a proton, a neutron and an electron.

| particle | relative mass | relative charge |
|---|---|---|
| proton | | |
| neutron | | |
| electron | $\frac{1}{1840}$ | |

[3]

**(b)** Bromine has two isotopes.

**(i)** Define the term *isotope*.

.....

..... [2]

**(ii)** Explain why the two isotopes of bromine have the same chemical properties.

.....

..... [2]

**(c)** The table shows the number of protons, neutrons and electrons in some atoms and ions.

Complete the table.

| particle | number of protons | number of neutrons | number of electrons |
|---|---|---|---|
| $^{7}_{3}Li$ | | | |
| $^{34}_{16}S^{2-}$ | | | |
| | 19 | 22 | 18 |

[5]

[Total: 12]

www.exam-mate.com

**2** Period 3 contains the elements sodium to argon. This question asks about the chemistry of each of the Period 3 elements or their compounds.

**(a)** Sodium nitrate is a white crystalline solid. When heated it melts and the following reaction occurs.

$$2NaNO_3(l) \rightarrow 2NaNO_2(l) + O_2(g)$$

A 3.40 g sample of sodium nitrate is heated.

Calculate the

- number of moles of $NaNO_3$ used,

..... mol

- number of moles of $O_2$ formed,

..... mol

- volume of $O_2$ formed, in $dm^3$ (measured at r.t.p.).

..... $dm^3$
[3]

**(b)** Magnesium reacts slowly with warm water to form a base, magnesium hydroxide.

**(i)** Explain what is meant by the term *base*.

..... [1]

**(ii)** Write a chemical equation for the reaction between magnesium and warm water.

..... [2]

www.exam-mate.com

**(c)** Aluminium oxide is amphoteric. It is insoluble in water.

Describe experiments to show that aluminium oxide is amphoteric.

.....

.....

.....

..... [3]

**(d)** Silicon(IV) oxide has a giant structure.

**(i)** Name the type of bonding in silicon(IV) oxide.

..... [1]

**(ii)** Give two **physical** properties of silicon(IV) oxide.

.....

..... [2]

**(e)** Calcium phosphate is used in fertilisers. The bonding in calcium phosphate is ionic. Calcium phosphate contains the phosphate ion, $PO_4^{3-}$.

**(i)** What is ionic bonding?

.....

..... [2]

**(ii)** Deduce the formula of calcium phosphate.

..... [1]

www.exam-mate.com

**(f)** Sulfur tetrafluoride, $SF_4$, can be made by combining gaseous sulfur with fluorine.

$$S(g) + 2F_2(g) \rightarrow SF_4(g)$$

The reaction is exothermic.

**(i)** Complete the energy level diagram for this reaction. Include an arrow which clearly shows the energy change during the reaction.

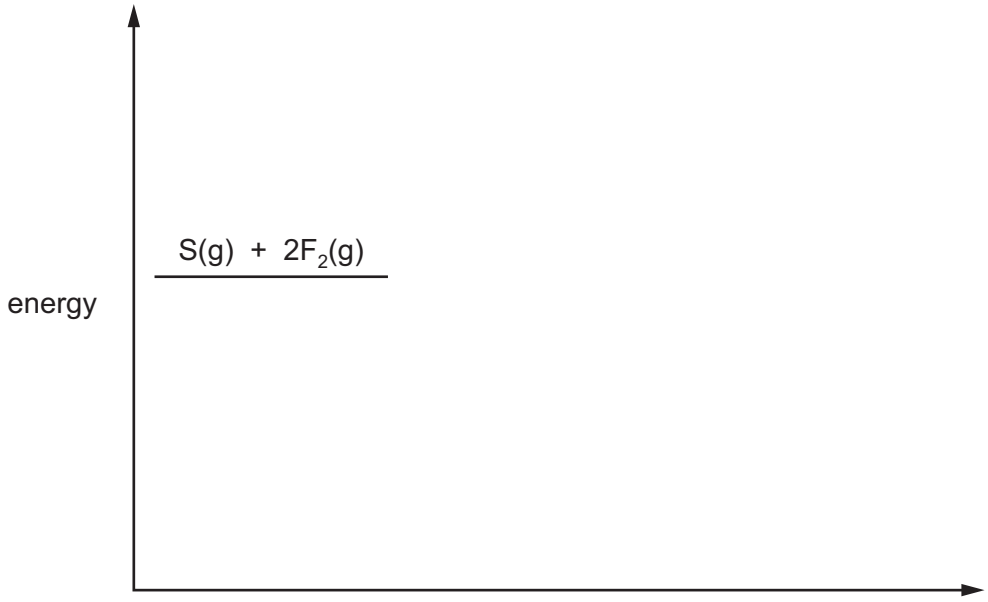


[3]

**(ii)** During the reaction the amount of energy given out is 780 kJ / mol.

The F–F bond energy is 160 kJ / mol.

Use this information to determine the bond energy, in kJ / mol, of one S–F bond in $SF_4$.

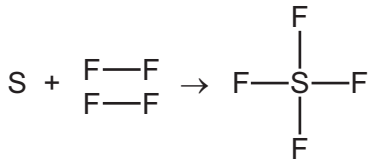

..... kJ / mol [3]

www.exam-mate.com

**(g)** Chlorine and compounds of chlorine are important in water treatment and in laboratory testing for water.

**(i)** Chlorine is added to water to make the water safe to drink.

Explain why adding chlorine makes water safe to drink.

..... [1]

**(ii)** A compound of chlorine is used in the laboratory to test for the presence of water.

Name the compound of chlorine used in this test and describe the colour change seen in a positive result of this test.

name of compound .....

colour change from ..... to .....
[3]

**(h)** Argon is an unreactive noble gas.

**(i)** Explain why argon is unreactive.

..... [1]

**(ii)** Give **one** use of argon.

..... [1]

[Total: 27]

www.exam-mate.com

**Question 3 starts on the next page.**

www.exam-mate.com

**3** When aqueous sodium thiosulfate and dilute hydrochloric acid are mixed, a precipitate of insoluble sulfur is produced. This makes the mixture difficult to see through.

$$Na_2S_2O_3(aq) + 2HCl(aq) \rightarrow S(s) + 2NaCl(aq) + H_2O(l) + SO_2(g)$$

The time taken for the cross to disappear from view is measured.

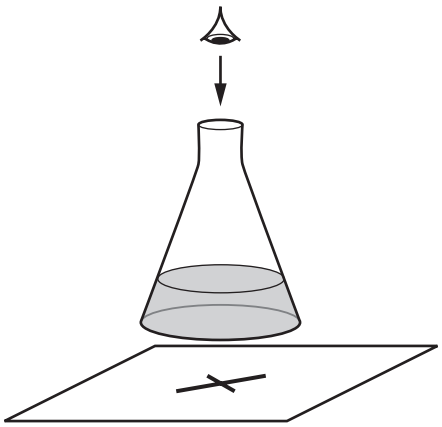

A student adds the following volumes of aqueous sodium thiosulfate, dilute hydrochloric acid and distilled water to the conical flask.

The time taken for the formation of the precipitate of sulfur to make the cross disappear from view is recorded.

| experiment number | volume of sodium thiosulfate / $cm^3$ | volume of hydrochloric acid / $cm^3$ | volume of distilled water / $cm^3$ | time taken for cross to disappear from view / s |
|---|---|---|---|---|
| 1 | 10 | 10 | 40 | 56 |
| 2 | 20 | 10 | 30 | 28 |
| 3 | | | | |

**(a)** State the order in which the aqueous sodium thiosulfate, hydrochloric acid and distilled water should be added to the flask.

.....

..... [1]

www.exam-mate.com

**(b)** In experiment 3 the student wanted the sodium thiosulfate to be double the concentration used in experiment 2.

**(i)** Complete the table to show the **volumes** which should be used and the **expected** time taken for the cross to disappear from view in experiment 3. [2]

**(ii)** Use collision theory to explain why increasing the concentration of sodium thiosulfate would change the rate of reaction.

.....

.....

.....

..... [2]

**(c)** The student repeated experiment 1 at a higher temperature.

Use collision theory to explain why the rate of reaction would increase.

.....

.....

.....

..... [3]

[Total: 8]

www.exam-mate.com

**4** Electroplating steel objects with silver involves a three-step process.

**step 1** A coating of copper is applied to the object.

**step 2** A coating of nickel is applied to the object.

**step 3** The coating of silver is applied to the object.

**(a)** A diagram of the apparatus used for **step 1** is shown.

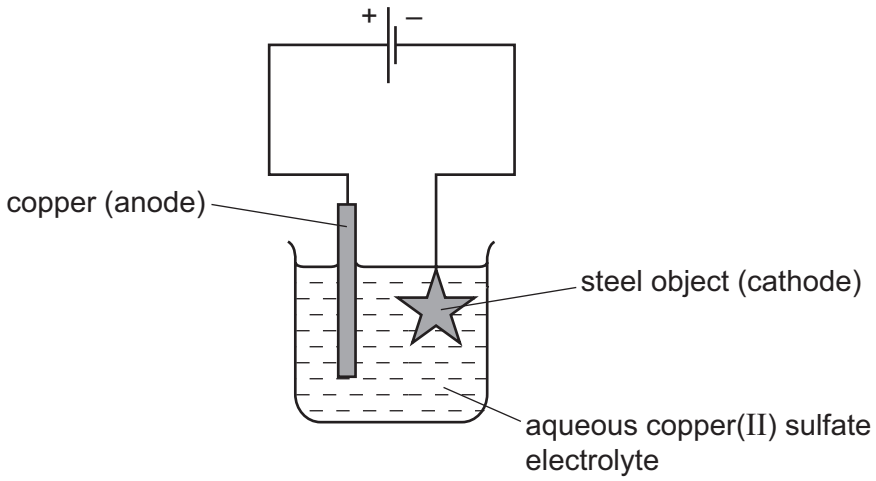


**(i)** The chemical process taking place on the surface of the object is

$$Cu^{2+}(aq) + 2e^- \rightarrow Cu(s)$$

Explain whether this process is oxidation or reduction.

.....

..... [1]

**(ii)** Explain why the concentration of copper ions in the electrolyte remains constant throughout **step 1**.

.....

.....

..... [2]

www.exam-mate.com

**(b)** Give **two** changes which would be needed in order to coat nickel onto the object in **step 2**.

.....

.....

.....

..... [2]

**(c)** Copper, nickel and silver are transition elements.
Typical physical properties of transition elements are a high density and a high melting point.

Give **three** different properties of transition metals which are not typical of other metals.

.....

.....

..... [3]

[Total: 8]

www.exam-mate.com

**5** Sulfuric acid is produced by the Contact process. The steps of the Contact process are shown.

starting material $\xrightarrow{\textbf{step 1}}$ sulfur dioxide $\xrightarrow{\textbf{step 2}}$ sulfur trioxide $\xrightarrow{\textbf{step 3}}$ oleum $\xrightarrow{\textbf{step 4}}$ sulfuric acid

**(a)** Sulfur is a common starting material for the Contact process.

Name a source of sulfur.

..... [1]

**(b)** Describe **step 2**, giving reaction conditions and a chemical equation. Reference to reaction rate and yield is not required.

.....

.....

.....

.....

.....

.....

..... [5]

**(c)** **Step 3** involves adding sulfur trioxide to concentrated sulfuric acid to form oleum.

Complete the chemical equation for this reaction.

$$H_2SO_4 + SO_3 \rightarrow \text{.....}$$

[1]

www.exam-mate.com

**(d)** Dilute sulfuric acid is a typical acid.

A student adds excess dilute sulfuric acid to a sample of solid copper(II) carbonate in a test-tube.

**(i)** Give **three** observations the student would make.

.....

.....

..... [2]

**(ii)** Give the **names** of all products formed.

.....

..... [1]

**(e)** Concentrated sulfuric acid has different properties to dilute sulfuric acid.

When concentrated sulfuric acid is added to glucose, $C_6H_{12}O_6$, steam is given off and a black solid is formed.

**(i)** Name the black solid.

..... [1]

**(ii)** What type of reaction has occurred?

..... [1]

[Total: 12]

www.exam-mate.com

**6** Petroleum is a source of many important chemicals.

**(a)** Name **two** industrial processes which must take place to produce alkenes from petroleum.

.....

..... [2]

**(b)** Ethene, $CH_2=CH_2$, and propene, $CH_2=CHCH_3$, can both be converted into polymers.

**(i)** What type of polymerisation takes place when ethene forms a polymer?

..... [1]

**(ii)** What is the empirical formula of the polymer formed from ethene?

..... [1]

**(iii)** Propene has the structural formula $CH_2=CHCH_3$.

Draw **two** repeat units of the polymer made from propene.

[2]

**(c)** Ethene will react with steam to form ethanol.

Propene will react with steam to form two isomers, both of which are alcohols.

Suggest the structures of these alcohols.

[2]

www.exam-mate.com

**(d)** Esters are organic chemicals noted for their characteristic smells. Ethanoic acid and methanol will react to form an ester.

**(i)** Name the catalyst needed to form an ester from ethanoic acid and methanol.

..... [1]

**(ii)** Name the ester formed when ethanoic acid reacts with methanol.

..... [1]

**(iii)** Draw the structure of the ester formed when ethanoic acid reacts with methanol. Show all bonds.

[2]

**(iv)** Give the name of a polyester.

..... [1]

[Total: 13]

Permission to reproduce items where third-party owned material protected by copyright is included has been sought and cleared where possible. Every reasonable effort has been made by the publisher (UCLES) to trace copyright holders, but if any items requiring clearance have unwittingly been included, the publisher will be pleased to make amends at the earliest possible opportunity.

To avoid the issue of disclosure of answer-related information to candidates, all copyright acknowledgements are reproduced online in the Cambridge International Examinations Copyright Acknowledgements Booklet. This is produced for each series of examinations and is freely available to download at www.cie.org.uk after the live examination series.

Cambridge International Examinations is part of the Cambridge Assessment Group. Cambridge Assessment is the brand name of University of Cambridge Local Examinations Syndicate (UCLES), which is itself a department of the University of Cambridge.



www.exam-mate.com

## The Periodic Table of Elements

Group

| I | II | | | | | | | | | | | III | IV | V | VI | VII | VIII |
|---|---|---|---|---|---|---|---|---|---|---|---|---|---|---|---|---|---|
| | | | | | | | 1<br>H<br>hydrogen<br>1 | | | | | | | | | | 2<br>He<br>helium<br>4 |
| 3<br>Li<br>lithium<br>7 | 4<br>Be<br>beryllium<br>9 | | | | | | | | | | | 5<br>B<br>boron<br>11 | 6<br>C<br>carbon<br>12 | 7<br>N<br>nitrogen<br>14 | 8<br>O<br>oxygen<br>16 | 9<br>F<br>fluorine<br>19 | 10<br>Ne<br>neon<br>20 |
| 11<br>Na<br>sodium<br>23 | 12<br>Mg<br>magnesium<br>24 | | | | | | | | | | | 13<br>Al<br>aluminium<br>27 | 14<br>Si<br>silicon<br>28 | 15<br>P<br>phosphorus<br>31 | 16<br>S<br>sulfur<br>32 | 17<br>Cl<br>chlorine<br>35.5 | 18<br>Ar<br>argon<br>40 |
| 19<br>K<br>potassium<br>39 | 20<br>Ca<br>calcium<br>40 | 21<br>Sc<br>scandium<br>45 | 22<br>Ti<br>titanium<br>48 | 23<br>V<br>vanadium<br>51 | 24<br>Cr<br>chromium<br>52 | 25<br>Mn<br>manganese<br>55 | 26<br>Fe<br>iron<br>56 | 27<br>Co<br>cobalt<br>59 | 28<br>Ni<br>nickel<br>59 | 29<br>Cu<br>copper<br>64 | 30<br>Zn<br>zinc<br>65 | 31<br>Ga<br>gallium<br>70 | 32<br>Ge<br>germanium<br>73 | 33<br>As<br>arsenic<br>75 | 34<br>Se<br>selenium<br>79 | 35<br>Br<br>bromine<br>80 | 36<br>Kr<br>krypton<br>84 |
| 37<br>Rb<br>rubidium<br>85 | 38<br>Sr<br>strontium<br>88 | 39<br>Y<br>yttrium<br>89 | 40<br>Zr<br>zirconium<br>91 | 41<br>Nb<br>niobium<br>93 | 42<br>Mo<br>molybdenum<br>96 | 43<br>Tc<br>technetium<br>– | 44<br>Ru<br>ruthenium<br>101 | 45<br>Rh<br>rhodium<br>103 | 46<br>Pd<br>palladium<br>106 | 47<br>Ag<br>silver<br>108 | 48<br>Cd<br>cadmium<br>112 | 49<br>In<br>indium<br>115 | 50<br>Sn<br>tin<br>119 | 51<br>Sb<br>antimony<br>122 | 52<br>Te<br>tellurium<br>128 | 53<br>I<br>iodine<br>127 | 54<br>Xe<br>xenon<br>131 |
| 55<br>Cs<br>caesium<br>133 | 56<br>Ba<br>barium<br>137 | 57–71<br>lanthanoids | 72<br>Hf<br>hafnium<br>178 | 73<br>Ta<br>tantalum<br>181 | 74<br>W<br>tungsten<br>184 | 75<br>Re<br>rhenium<br>186 | 76<br>Os<br>osmium<br>190 | 77<br>Ir<br>iridium<br>192 | 78<br>Pt<br>platinum<br>195 | 79<br>Au<br>gold<br>197 | 80<br>Hg<br>mercury<br>201 | 81<br>Tl<br>thallium<br>204 | 82<br>Pb<br>lead<br>207 | 83<br>Bi<br>bismuth<br>209 | 84<br>Po<br>polonium<br>– | 85<br>At<br>astatine<br>– | 86<br>Rn<br>radon<br>– |
| 87<br>Fr<br>francium<br>– | 88<br>Ra<br>radium<br>– | 89–103<br>actinoids | 104<br>Rf<br>rutherfordium<br>– | 105<br>Db<br>dubnium<br>– | 106<br>Sg<br>seaborgium<br>– | 107<br>Bh<br>bohrium<br>– | 108<br>Hs<br>hassium<br>– | 109<br>Mt<br>meitnerium<br>– | 110<br>Ds<br>darmstadtium<br>– | 111<br>Rg<br>roentgenium<br>– | 112<br>Cn<br>copernicium<br>– | | 114<br>Fl<br>flerovium<br>– | | 116<br>Lv<br>livermorium<br>– | | |

**Key**

| atomic number |
|---|
| **atomic symbol** |
| name |
| relative atomic mass |

| | | | | | | | | | | | | | | | |
|---|---|---|---|---|---|---|---|---|---|---|---|---|---|---|---|
| lanthanoids | 57<br>La<br>lanthanum<br>139 | 58<br>Ce<br>cerium<br>140 | 59<br>Pr<br>praseodymium<br>141 | 60<br>Nd<br>neodymium<br>144 | 61<br>Pm<br>promethium<br>– | 62<br>Sm<br>samarium<br>150 | 63<br>Eu<br>europium<br>152 | 64<br>Gd<br>gadolinium<br>157 | 65<br>Tb<br>terbium<br>159 | 66<br>Dy<br>dysprosium<br>163 | 67<br>Ho<br>holmium<br>165 | 68<br>Er<br>erbium<br>167 | 69<br>Tm<br>thulium<br>169 | 70<br>Yb<br>ytterbium<br>173 | 71<br>Lu<br>lutetium<br>175 |
| actinoids | 89<br>Ac<br>actinium<br>– | 90<br>Th<br>thorium<br>232 | 91<br>Pa<br>protactinium<br>231 | 92<br>U<br>uranium<br>238 | 93<br>Np<br>neptunium<br>– | 94<br>Pu<br>plutonium<br>– | 95<br>Am<br>americium<br>– | 96<br>Cm<br>curium<br>– | 97<br>Bk<br>berkelium<br>– | 98<br>Cf<br>californium<br>– | 99<br>Es<br>einsteinium<br>– | 100<br>Fm<br>fermium<br>– | 101<br>Md<br>mendelevium<br>– | 102<br>No<br>nobelium<br>– | 103<br>Lr<br>lawrencium<br>– |

The volume of one mole of any gas is 24 $dm^3$ at room temperature and pressure (r.t.p.)

© UCLES 2016



www.exam-mate.com