DCLab Lab1 Report Group12

File Structure

team12_lab2

|- team12_lab2_report.pdf

|- src

  |- Rsa256Wrapper.sv

  |- Rsa256Core.sv

System Architecture

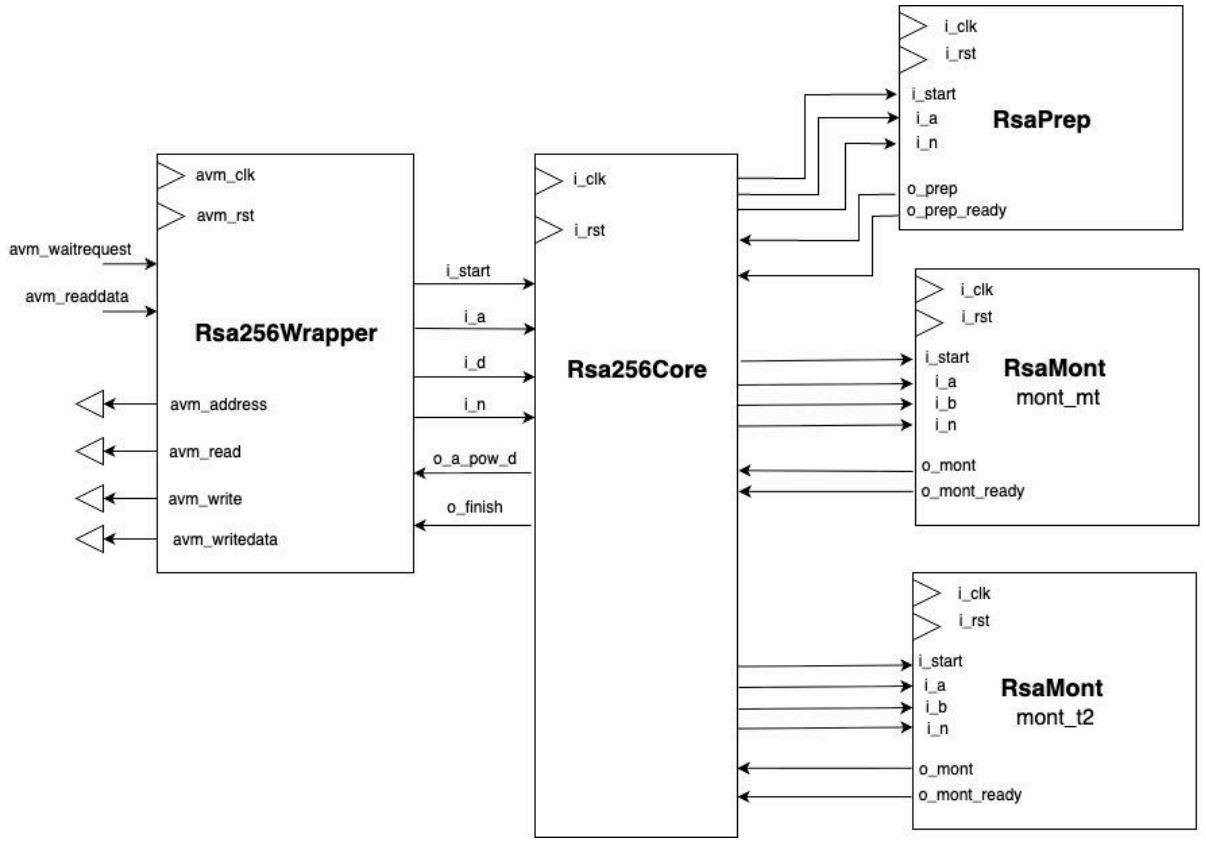

Hardware Scheduling (FSM)

Wrapper :

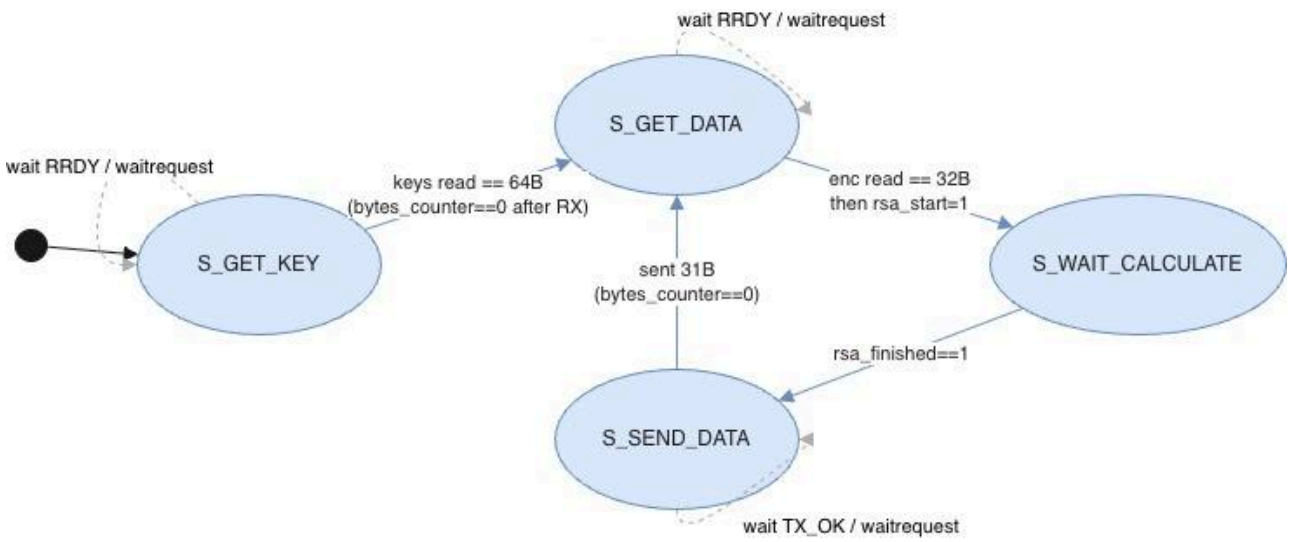

Rsa256Core:

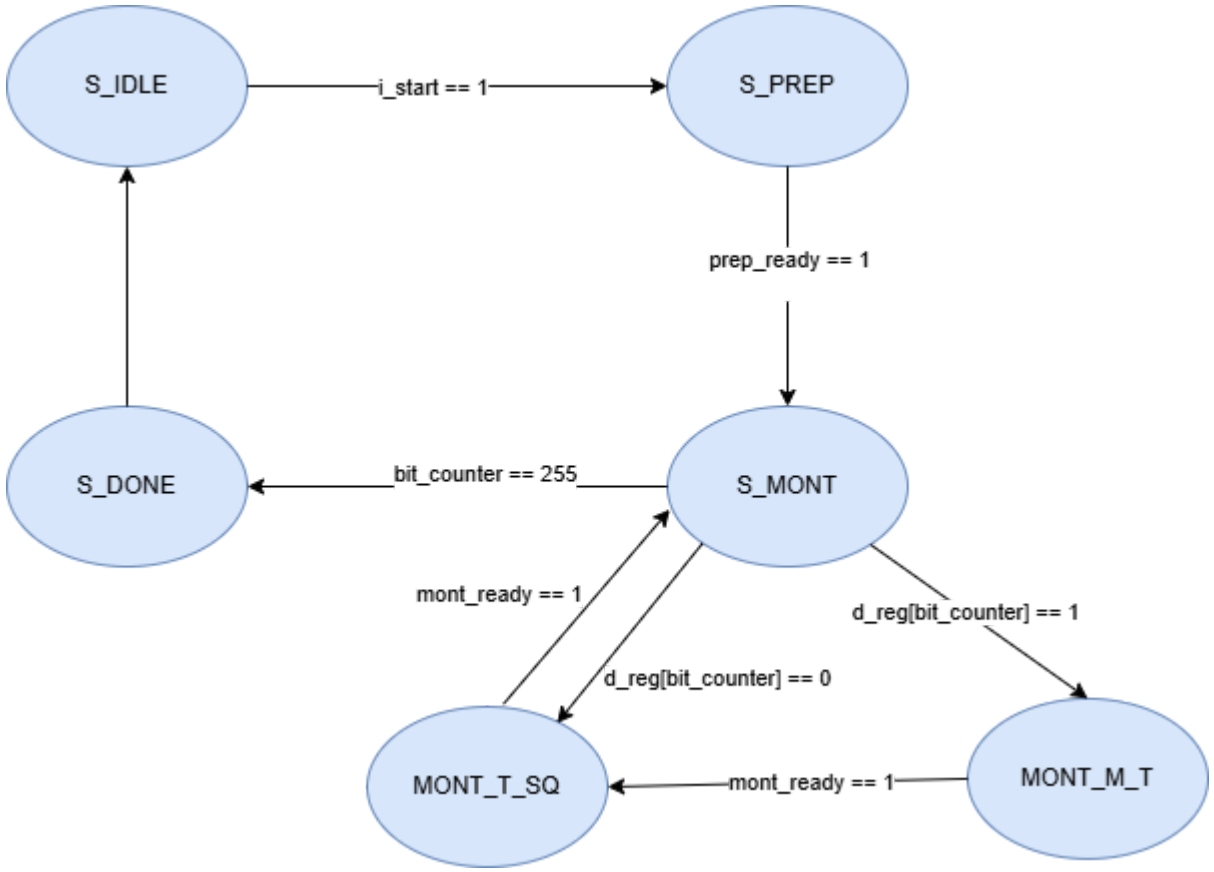

RsaPrep:

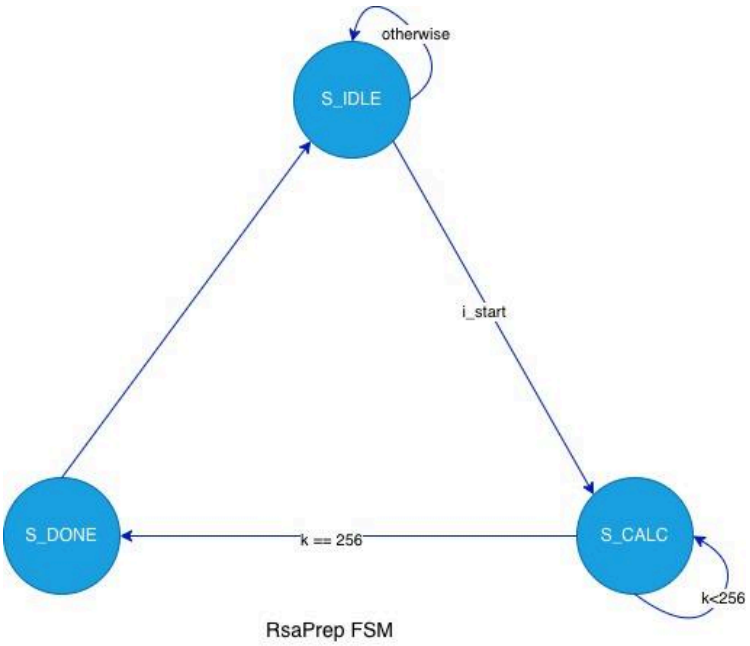

S_IDLE: Wait for start signal
S_CALC: Calculate i_y * 2^256 mod N
S_DONE: Set ready to high and output result

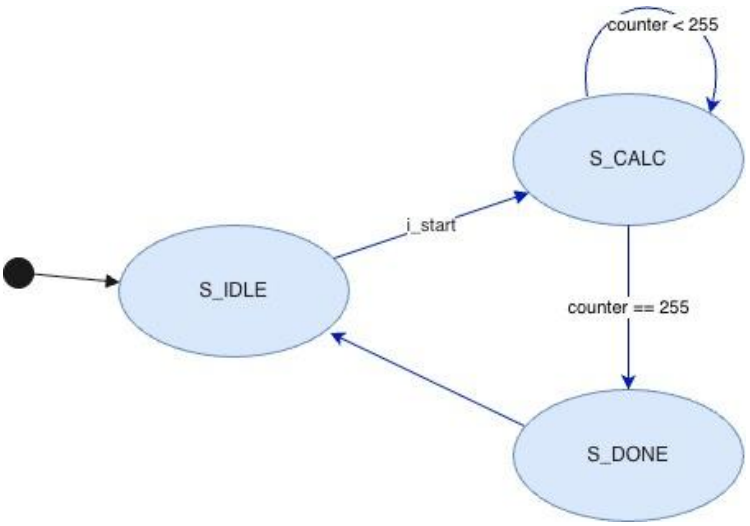

Fitter Summary截圖

Fitter Summary	
Fitter DE2_115.sv	Successful - Tue Oct 14 16:20:17 2025
Quartus II 64-Bit Version	15.0.0 Build 145 04/22/2015 SJ Full Version
Revision Name	DE2_115
Top-level Entity Name	DE2_115
Family	Cyclone IV E
Device	EP4CE115F29C7
Timing Models	Final
Total logic elements	6,772 / 114,480 (6 %)
Total combinational functions	6,519 / 114,480 (6 %)
Dedicated logic registers	2,716 / 114,480 (2 %)
Total registers	2716
Total pins	518 / 529 (98 %)
Total virtual pins	0
Total memory bits	0 / 3,981,312 (0 %)
Embedded Multiplier 9-bit elements	0 / 532 (0 %)
Total PLLs	1 / 4 (25 %)

Timing Analyzer截圖

TimeQuest Timing Analyzer Summary	
Quartus II Version	Version 15.0.0 Build 145 04/22/2015 SJ Full Version
Revision Name	DE2_115
Device Family	Cyclone IV E
Device Name	EP4CE115F29C7
Timing Models	Final
Delay Model	Combined
Rise/Fall Delays	Enabled

遇到的問題與解決辦法、心得與建議

1. Overflow
   Initially, we fail to recognize a possible overflow in **RsaPrep** where *t* + *t* is calculated. Similarly, in **RsaMont**, we have to process *m+N* before proceeding to check *m+N mod N*. We observed this issue through the waveform and solved it by adding additional bits to *temp.*

2. Module Synchronization Problem
   At first, our design consisted of two **RsaMont** instances: one calculates *m * t mod N* and the other calculates *t^2 mod N*. While the original design passed the testbench successfully, which is under an ideal environment, it failed to output the correct data on the FPGA. We conjectured that this was due to slight time differences between the two instances in reality and might cause the core to assign incorrect data to *m.* and t. We solved this issue by changing our design to one instance and calculating the two values by switching the input.