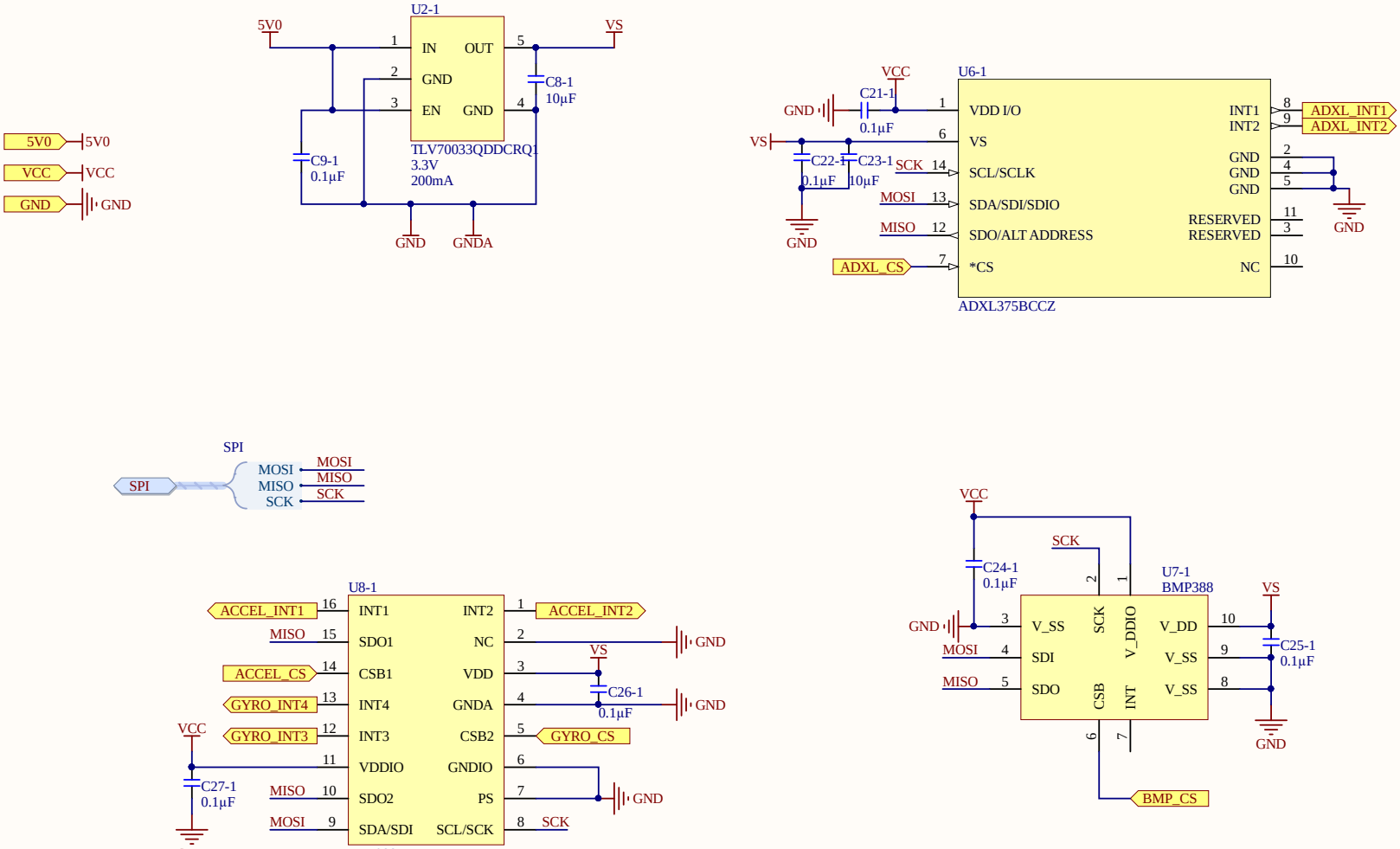


| | | | |
|---|---|---|---|
| Title * | | | * |
| Size: A4 | Number:* | Revision:* | * |
| Date: 4/18/2019 | Time: 01:33:56 | Sheet * of * | * |
| File: C:\Users\timv\SSI\Spaceshot\Avionics\SpaceSalmon_2.0\Sensors.SchDoc | | | * |

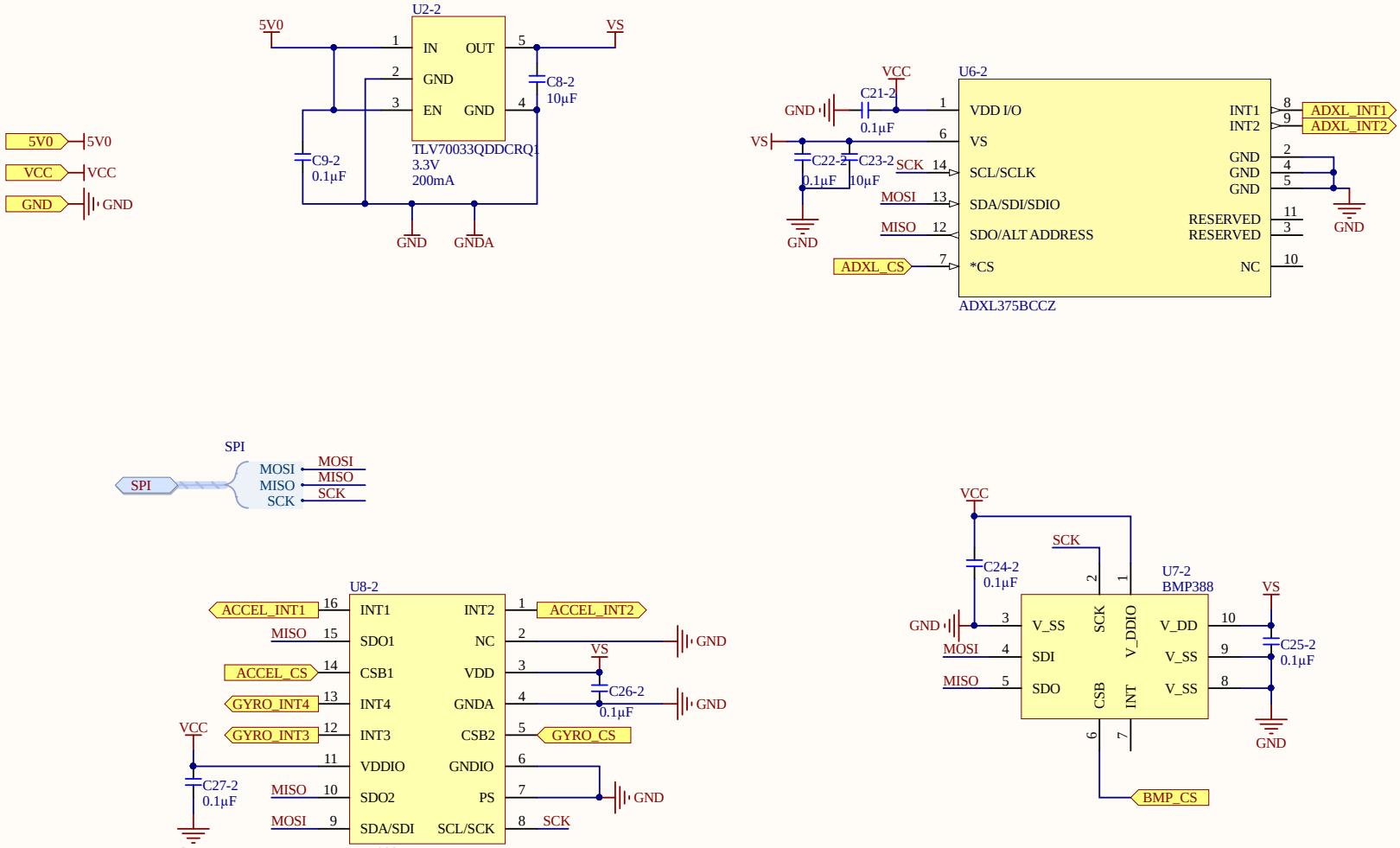


| | | | |
|---|---|---|---|
| Title * | | | * |
| Size: A4 | Number:* | Revision:* | * |
| Date: 4/18/2019 | Time: 01:33:56 | Sheet * of * | * |
| File: C:\Users\timv\SSI\Spaceshot\Avionics\SpaceSalmon_2.0\Sensors.SchDoc | | | * |

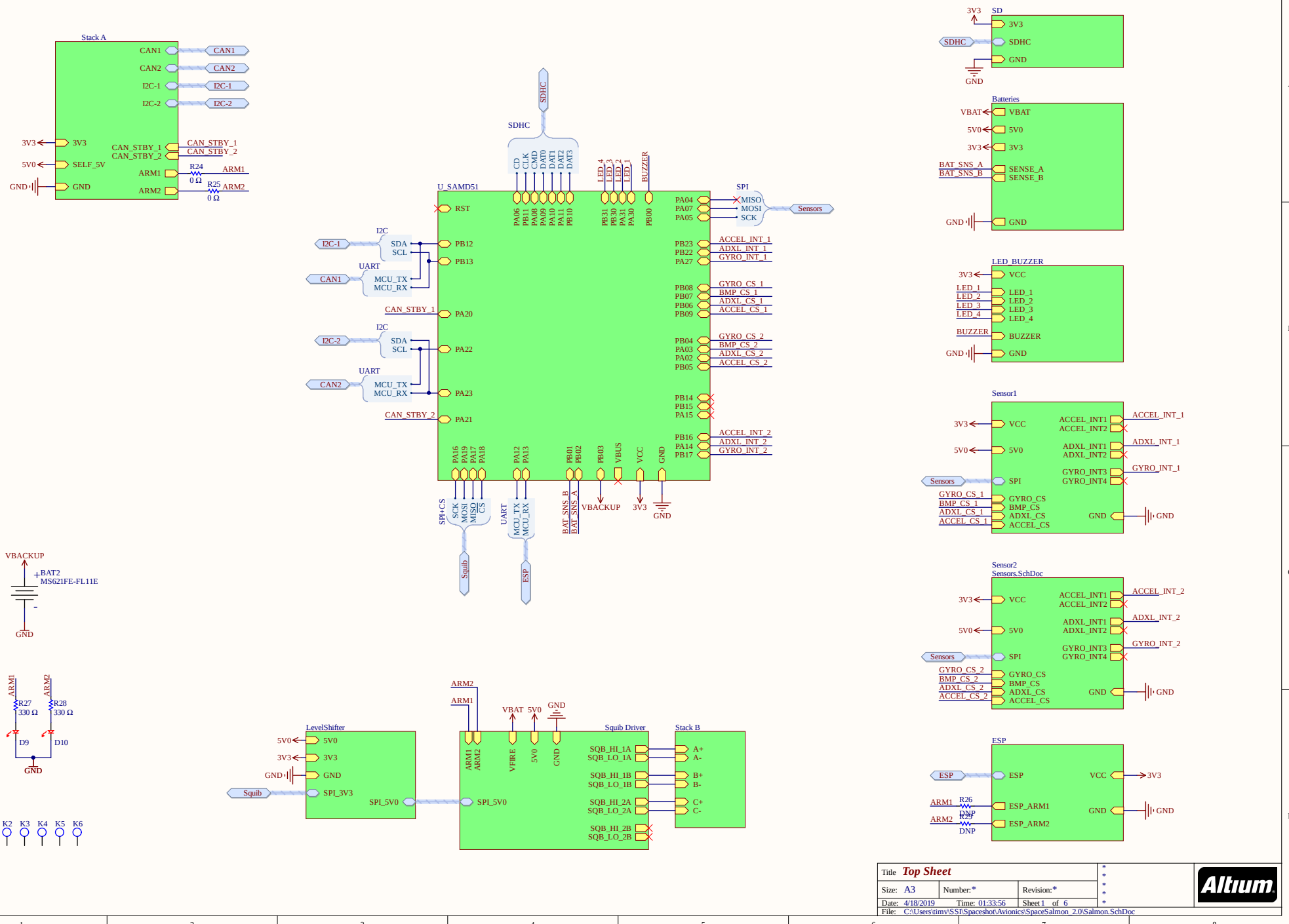
Stack A
CAN1
CAN2
I2C-1
I2C-2
3V3
SELF_5V
GND
CAN_STBY_1
CAN_STBY_2
ARM1
ARM2
R24
0 Ω
R25
0 Ω
U_SAMD51
SDHC
CD
CLK
CMD
DAT0
DAT1
DAT2
DAT3
LED_4
LED_3
LED_2
LED_1
BUZZER
RST
PA06
PB11
PA08
PA09
PA10
PA11
PB10
PB31
PB30
PA31
PA30
PB00
SPI
MISO
MOSI
SCK
Sensors
PA04
PA07
PA05
I2C
SDA
SCL
PB12
PB13
UART
MCU_TX
MCU_RX
PB23
PB22
PA27
ACCEL_INT_1
ADXL_INT_1
GYRO_INT_1
PB08
PB07
PB06
PB09
GYRO_CS_1
BMP_CS_1
ADXL_CS_1
ACCEL_CS_1
PA20
PA22
PA23
PA21
PB04
PA03
PA02
PB05
GYRO_CS_2
BMP_CS_2
ADXL_CS_2
ACCEL_CS_2
PB14
PB15
PA15
PB16
PA14
PB17
ACCEL_INT_2
ADXL_INT_2
GYRO_INT_2
PA16
PA19
PA17
PA18
PA12
PA13
PB01
PB02
PB03
VBUS
VCC
GND
SPI+CS
SCK
MOSI
MISO
CS
Squib
UART
MCU_TX
MCU_RX
ESP
BAT_SNS_B
BAT_SNS_A
VBACKUP
3V3
GND
SD
3V3
SDHC
GND
Batteries
VBAT
5V0
3V3
BAT_SNS_A
BAT_SNS_B
SENSE_A
SENSE_B
GND
LED_BUZZER
3V3
VCC
LED_1
LED_2
LED_3
LED_4
BUZZER
GND
Sensor1
3V3
VCC
5V0
5V0
Sensors
SPI
GYRO_CS_1
BMP_CS_1
ADXL_CS_1
ACCEL_CS_1
GYRO_CS
BMP_CS
ADXL_CS
ACCEL_CS
ACCEL_INT1
ACCEL_INT2
ACCEL_INT_1
ADXL_INT1
ADXL_INT2
ADXL_INT_1
GYRO_INT3
GYRO_INT4
GYRO_INT_1
GND
Sensor2
Sensors.SchDoc
3V3
VCC
5V0
5V0
Sensors
SPI
GYRO_CS_2
BMP_CS_2
ADXL_CS_2
ACCEL_CS_2
GYRO_CS
BMP_CS
ADXL_CS
ACCEL_CS
ACCEL_INT1
ACCEL_INT2
ACCEL_INT_2
ADXL_INT1
ADXL_INT2
ADXL_INT_2
GYRO_INT3
GYRO_INT4
GYRO_INT_2
GND
ESP
ESP
ESP
VCC
3V3
ARM1
R26
DNP
ARM2
R27
DNP
ESP_ARM1
ESP_ARM2
GND
VBACKUP
BAT2
MS621FE-FL11E
GND
ARM1
ARM2
R27
330 Ω
R28
330 Ω
D9
D10
GND
K1
K2
K3
K4
K5
K6
LevelShifter
5V0
3V3
GND
Squib
SPI_3V3
SPI_5V0
ARM2
ARM1
VBAT
5V0
GND
Squib Driver
ARM1
ARM2
VFIRE
5V0
GND
SPI_5V0
SQB_HI_1A
SQB_LO_1A
SQB_HI_1B
SQB_LO_1B
SQB_HI_2A
SQB_LO_2A
SQB_HI_2B
SQB_LO_2B
Stack B
A+
A-
B+
B-
C+
C-
Title
Top Sheet
Size: A3
Number: *
Revision: *
Date: 4/18/2019
Time: 01:33:56
Sheet 1 of 6
File: C:\Users\timv\SSI\Spaceshot\Avionics\SpaceSalmon_2.0\Salmon.SchDoc
Altium

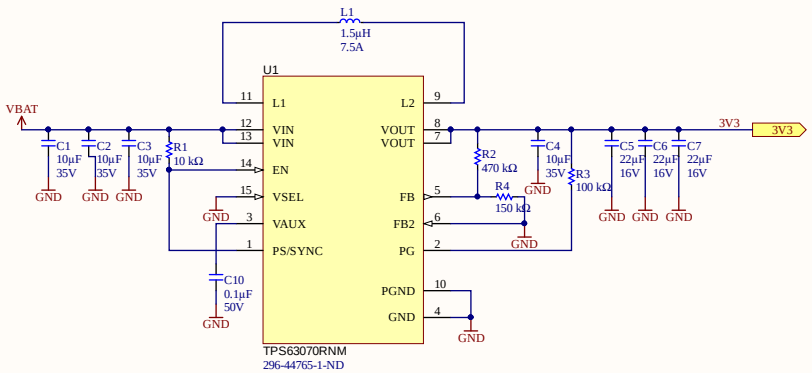


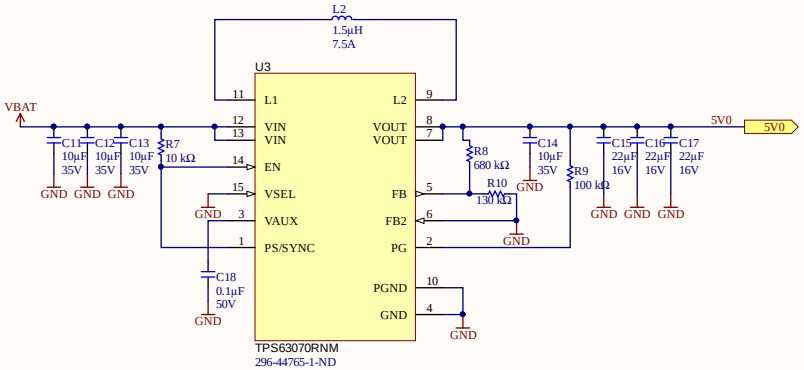


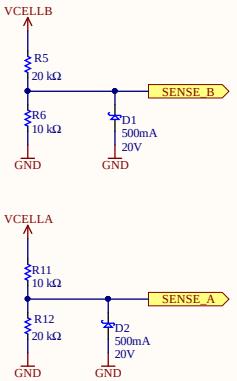

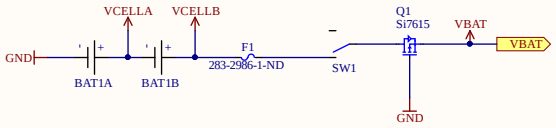


| | | | |
|---|---|---|---|
| Title | **Battery Management** | | |
| Size: A3 | Number: * | Revision: * | |
| Date: 4/18/2019 | Time: 01:33:57 | Sheet 4 of 6 | |
| File: C:\Users\timv\SSI\Spaceshot\Avionics\SpaceSalmon_2.0\Battery_Management.SchDoc | | | |

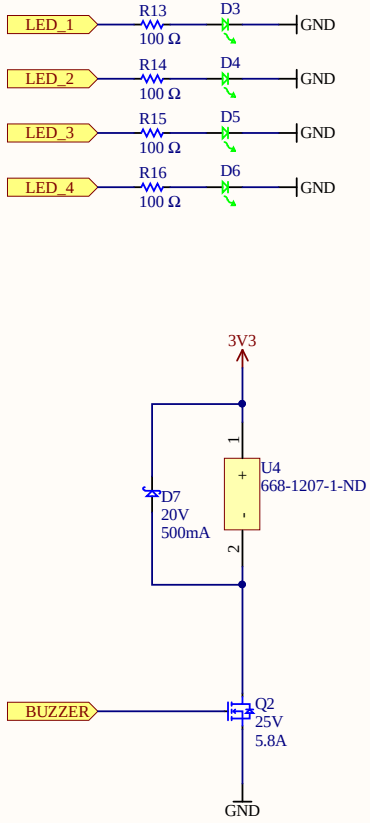


| | | | |
|---|---|---|---|
| Title | ***External Indicators*** | | |
| Size: A4 | Number:* | Revision:* | |
| Date: 4/18/2019 | Time: 01:33:57 | Sheet 5 of 6 | |
| File: C:\Users\timv\SSI\Spaceshot\Avionics\SpaceSalmon_2.0\Blink_Blink_Beep_Boop.SchDoc | | | |

Altium

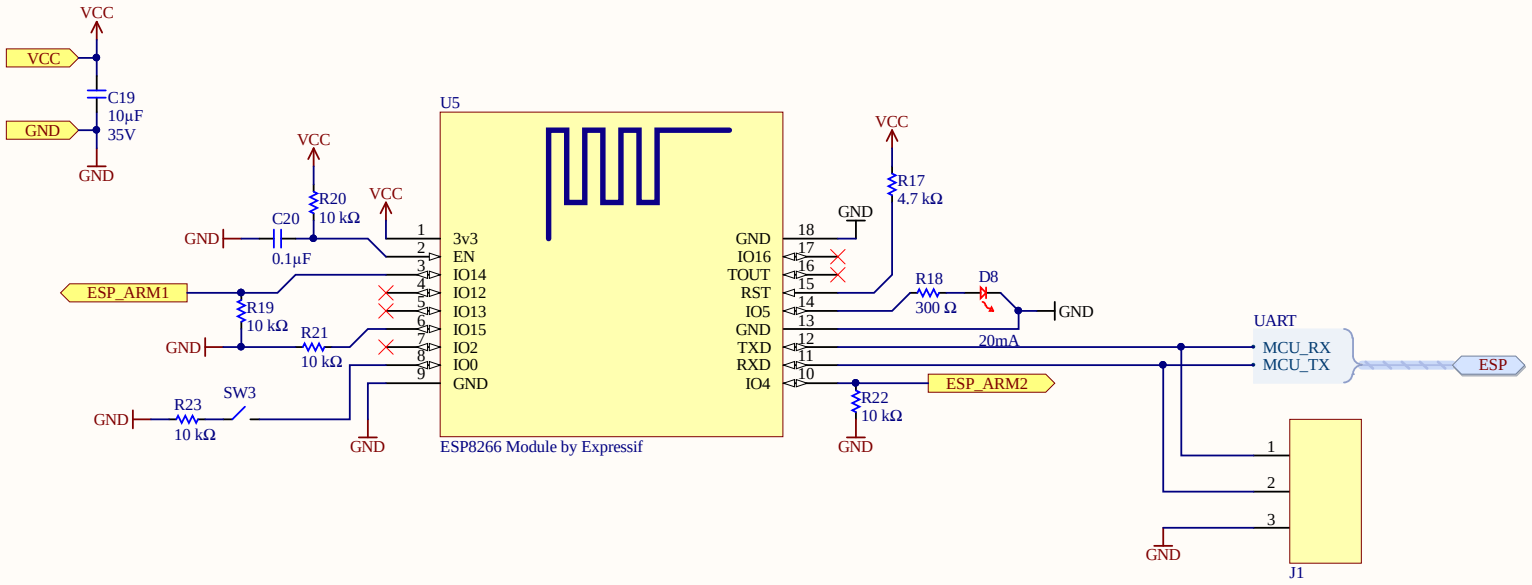


| | | | |
|---|---|---|---|
| Title * | | | * |
| Size: A4 | Number:* | Revision:* | * |
| Date: 4/18/2019 | Time: 01:33:57 | Sheet * of * | * |
| File: C:\Users\timv\SSI\Spaceshot\Avionics\SpaceSalmon_2.0\ESP8266.SchDoc | | | |

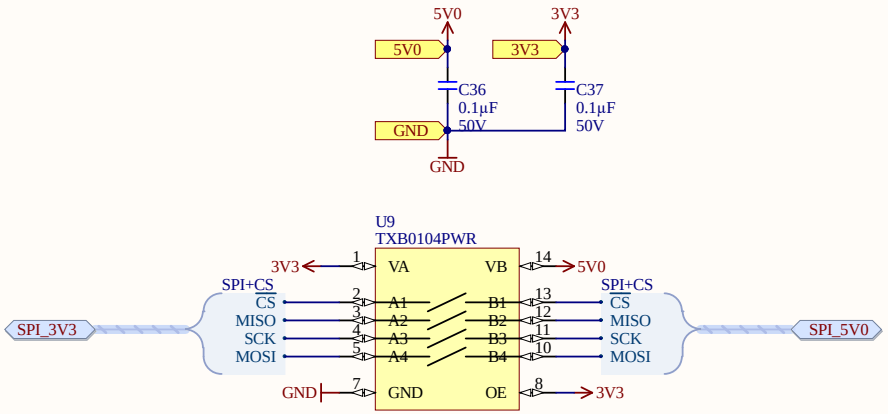


| | | | |
|---|---|---|---|
| Title | ***Top Sheet*** | | |
| Size: A4 | Number:* | Revision:* | |
| Date: 4/18/2019 | Time: 01:33:57 | Sheet * of * | |
| File: C:\Users\timv\SSI\Spaceshot\Avionics\SpaceSalmon_2.0\LevelShifter.SchDoc | | | |

Altium

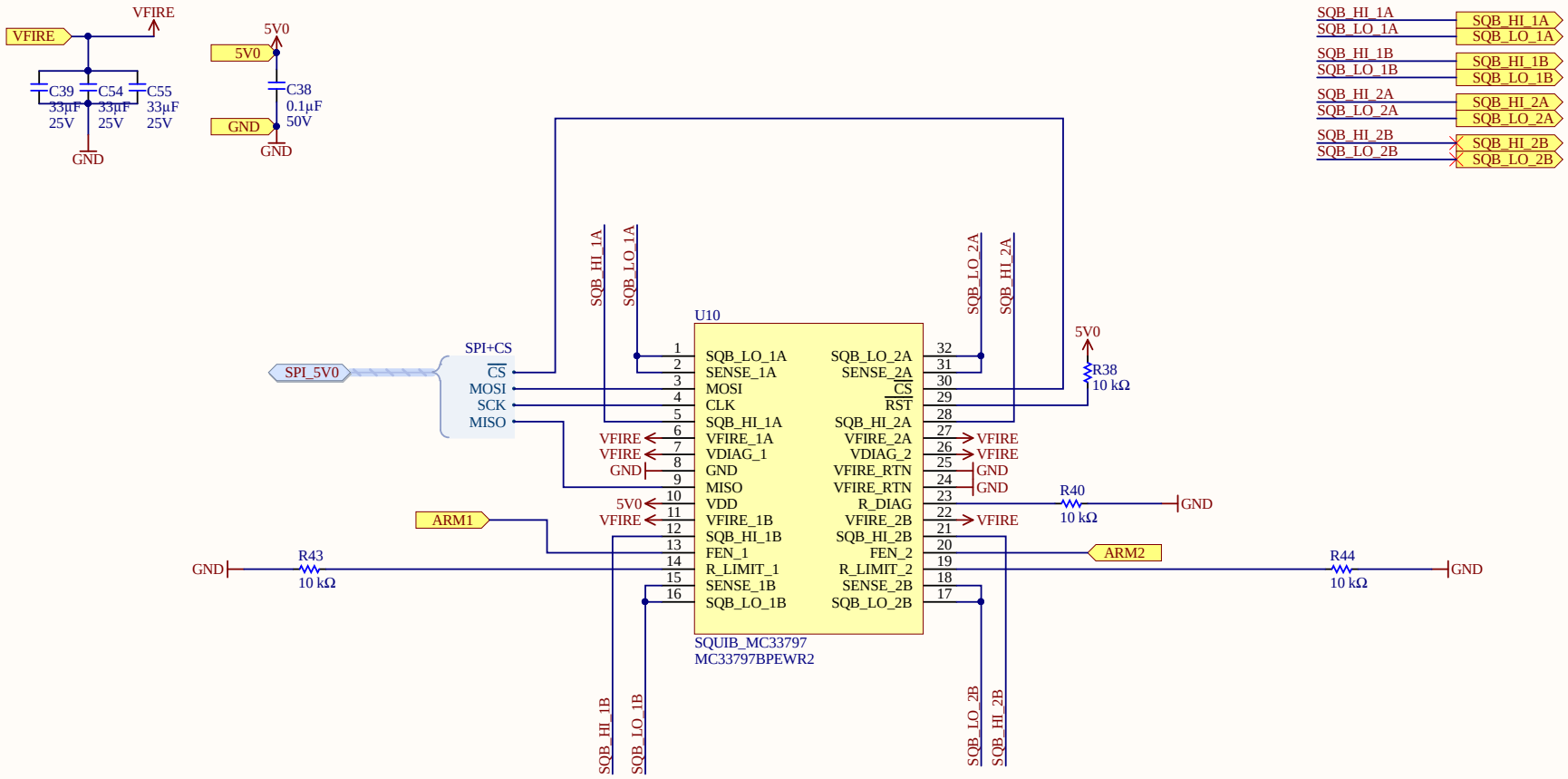


| | | | |
|---|---|---|---|
| Title | *Top Sheet* | | |
| Size: A4 | Number:* | Revision:* | |
| Date: 4/18/2019 | Time: 01:33:57 | Sheet * of * | |
| File: C:\Users\timv\SSI\Spaceshot\Avionics\SpaceSalmon_2.0\MC33797.SchDoc | | | |

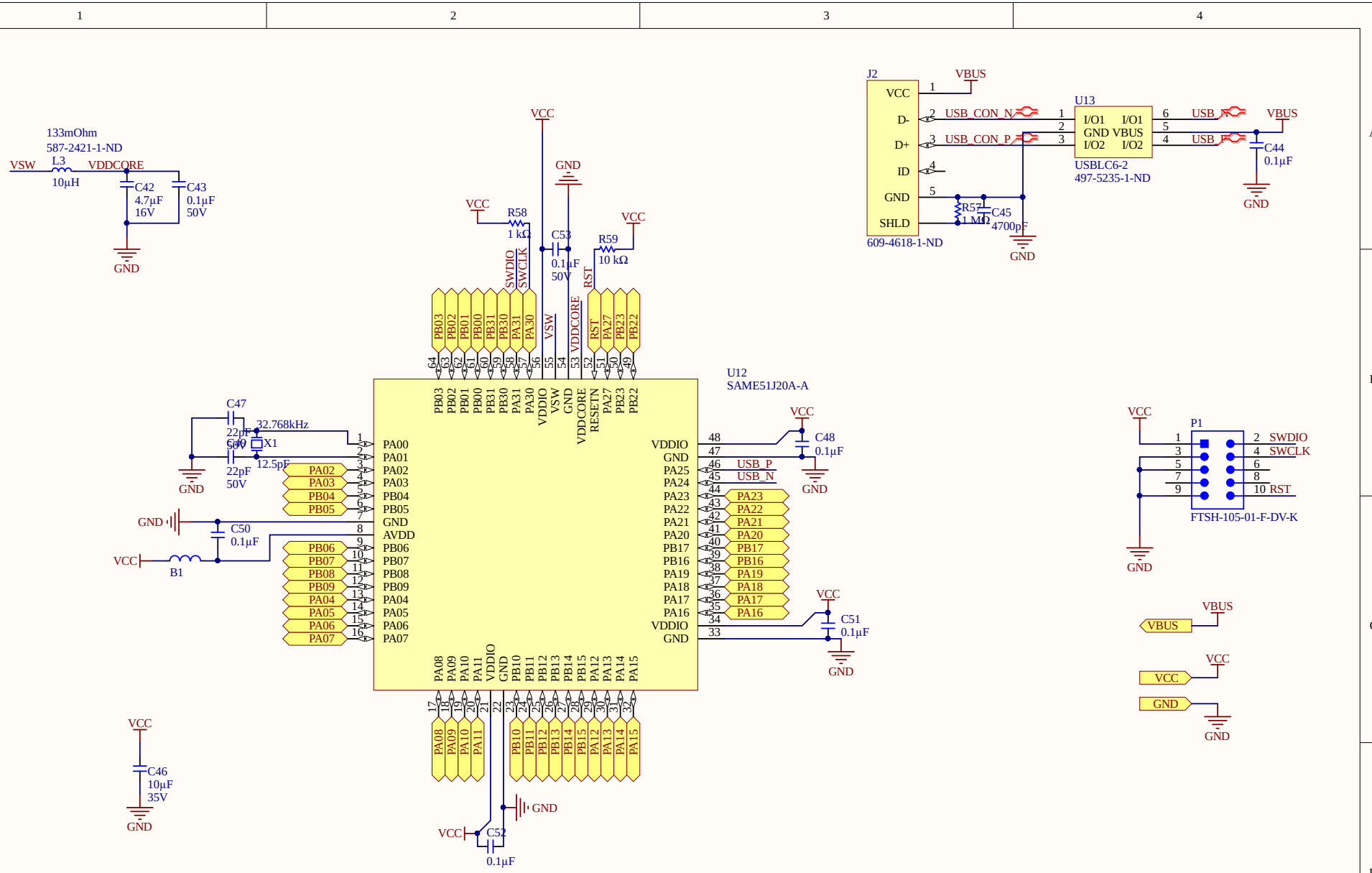
133mOhm
587-2421-1-ND
VSW
L3
10µH
VDDCORE
C42
4.7µF
16V
C43
0.1µF
50V
GND
VCC
R58
1 kΩ
SWDIO
SWCLK
C53
0.1µF
50V
R59
10 kΩ
RST
PB03 PB02 PB01 PB00 PB31 PB30 PA31 PA30 VSW VDDCORE RST PA27 PB23 PB22
U12
SAME51J20A-A
PA00 PA01 PA02 PA03 PB04 PB05 GND AVDD PB06 PB07 PB08 PB09 PA04 PA05 PA06 PA07
VDDIO GND PA25 PA24 PA23 PA22 PA21 PA20 PB17 PB16 PA19 PA18 PA17 PA16 VDDIO GND
PA08 PA09 PA10 PA11 VDDIO GND PB10 PB11 PB12 PB13 PB14 PB15 PA12 PA13 PA14 PA15
C47
22pF
50V
32.768kHz
X1
12.5pF
C50
0.1µF
B1
C46
10µF
35V
C52
0.1µF
C48
0.1µF
C51
0.1µF
J2
VCC
D-
D+
ID
GND
SHLD
USB_CON_N
USB_CON_P
609-4618-1-ND
U13
I/O1 I/O1
GND VBUS
I/O2 I/O2
USBLC6-2
497-5235-1-ND
USB_A
USB_B
C44
0.1µF
R57
1 MΩ
C45
4700pF
P1
SWDIO
SWCLK
RST
FTSH-105-01-F-DV-K
VBUS
Title *
Size: A4
Number:*
Revision:*
Date: 4/18/2019
Time: 01:33:58
Sheet * of *
File: C:\Users\timv\SSI\Spaceshot\Avionics\SpaceSalmon_2.0\SAMD51.SchDoc
Altium

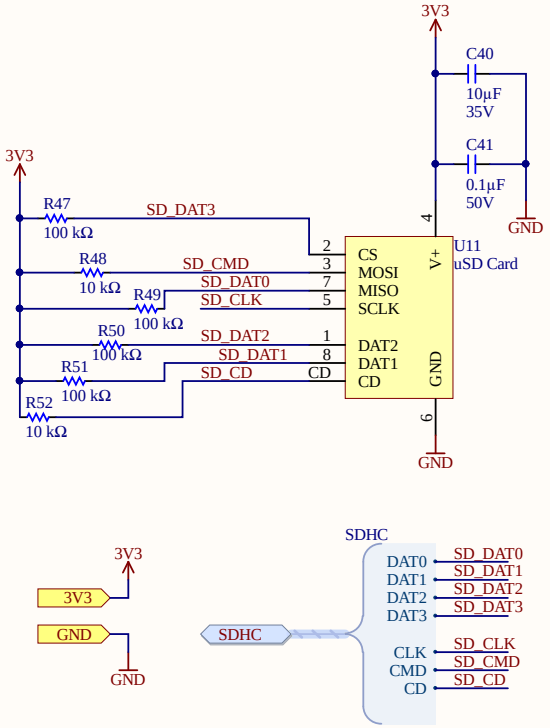


| | | | |
|---|---|---|---|
| Title * | | | |
| Size: A4 | Number:* | Revision:* | |
| Date: 4/18/2019 | Time: 01:33:58 | Sheet * of * | |
| File: C:\Users\timv\SSI\Spaceshot\Avionics\SpaceSalmon_2.0\SD.SchDoc | | | |

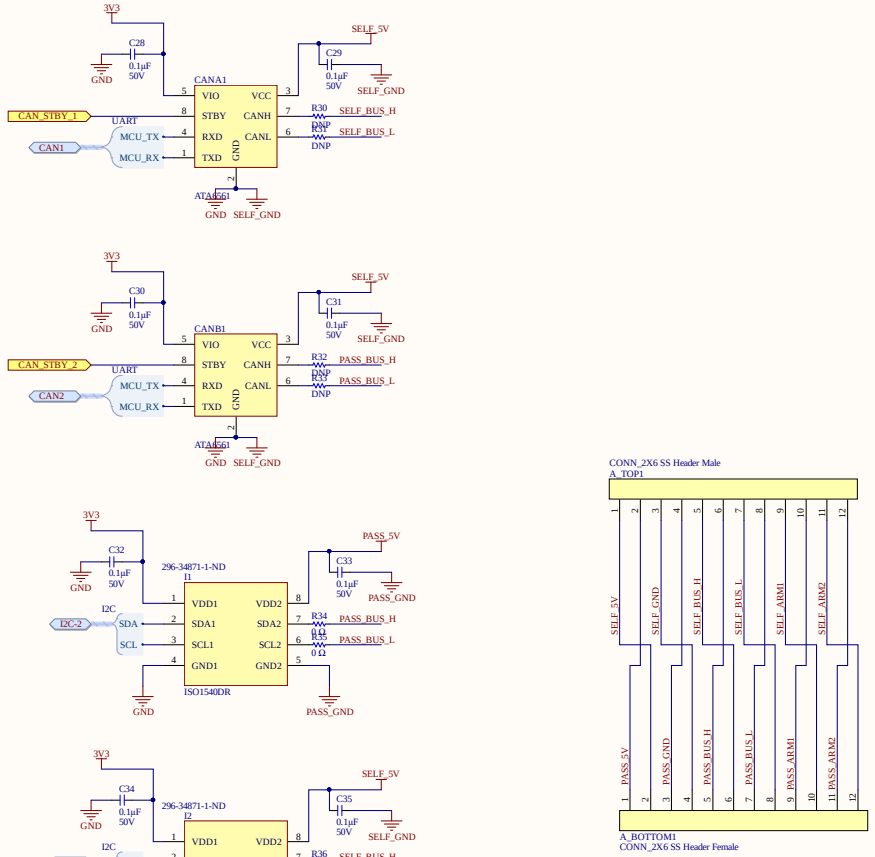


| | | | |
|---|---|---|---|
| Title * | | | |
| Size: A3 | Number:* | Revision:* | |
| Date: 4/18/2019 | Time: 01:33:58 | Sheet * of * | |
| File: C:\Users\timv\SSI\Spaceshot\Avionics\SpaceSalmon_2.0\Stack_A.SchDoc | | | |

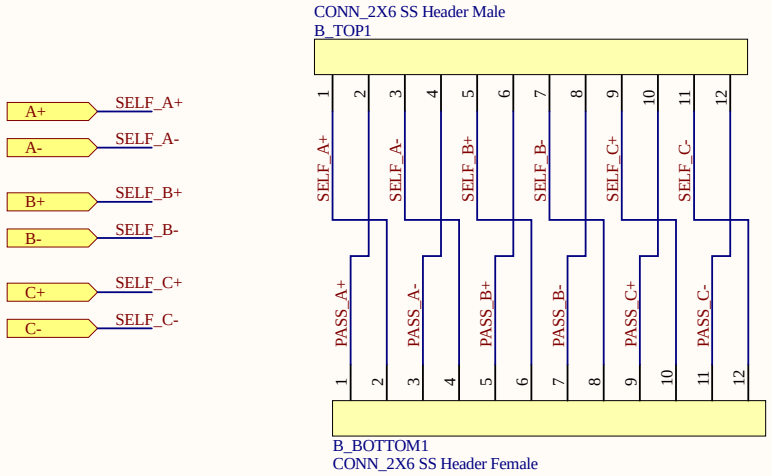


| | | | |
|---|---|---|---|
| Title * | | | * * * * * |
| Size: A4 | Number:* | Revision:* | |
| Date: 4/18/2019 | Time: 01:33:58 | Sheet * of * | |
| File: C:\Users\timv\SSI\Spaceshot\Avionics\SpaceSalmon_2.0\Stack_B.SchDoc | | | |

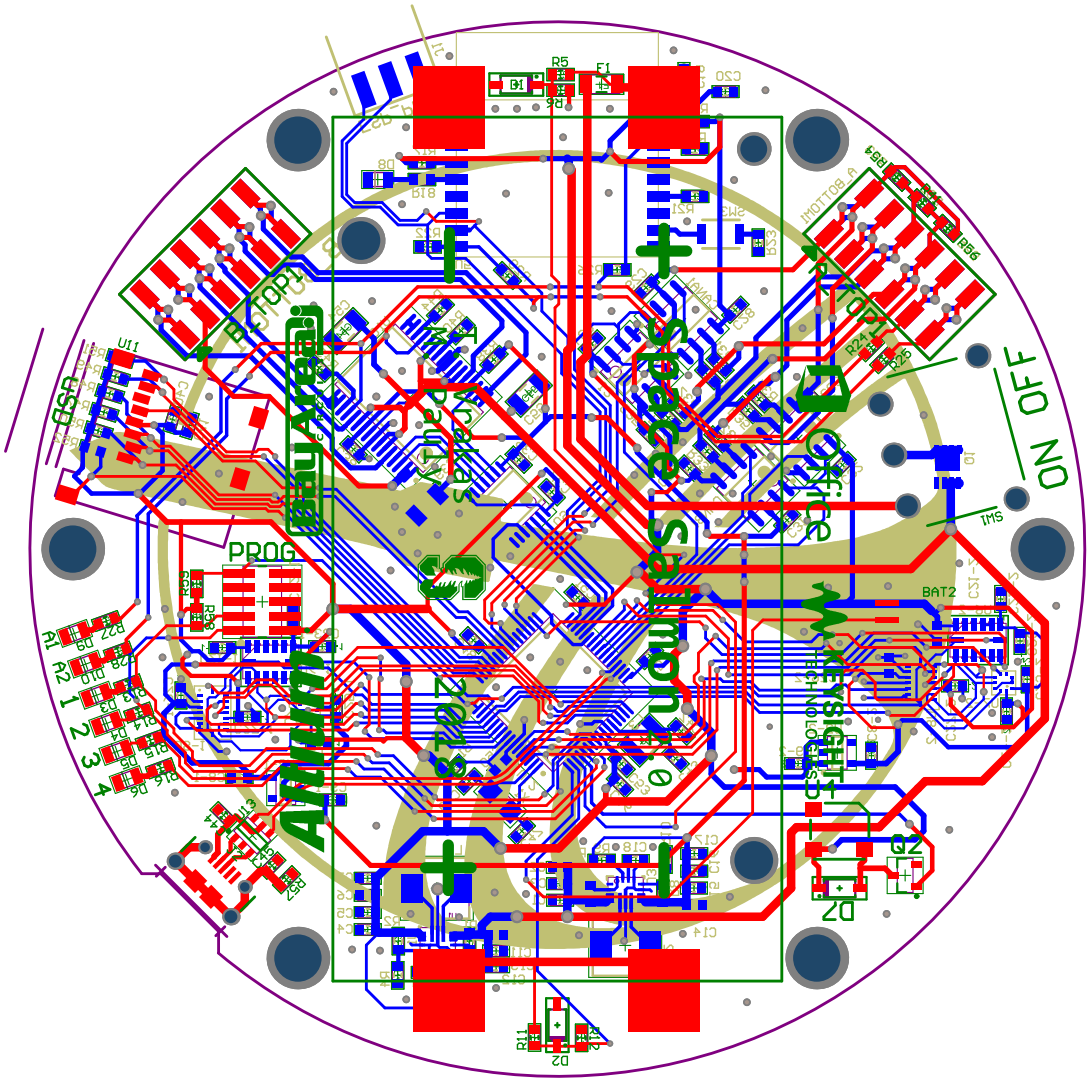
ON OFF
PROG
BAT2
IMS
U11
R5
F1
D2
Q2
R11
R12
R24
R25
R56
R54
R57
R58
R59
A1
A2
1
2
3
4

# Component list

**Source Data From:**

**Project:**

**Variant:**

Report Date:

Print Date:

| Description | Footprint | Quantity | Designator |
|---|---|---|---|
| | SAMTEC_SSW-106-22-F-D-VS | 2 | A_BOTTOM1, B_BOTTOM1 |
| | SAMTEC_TSM-106-03-F-DV | 2 | A_TOP1, B_TOP1 |
| FERRITE BEAD 600 OHM 300mA | R0603 | 1 | B1 |
| Dual Lithium Ion Cell Holder | BATT_18650_KEYSTONE_1048 | 1 | BAT1 |
| MS621FE RECHARGEABLE COIN CELL BACKUP | BATT_COINCELL_RECHARGEABLE | 1 | BAT2 |
| | C0603 | 15 | C1, C2, C3, C4, C8-1, C8-2, C11, C12, C13, C14, C19, C23-1, C23-2, C40, C46 |
| | C0603 | 6 | C5, C6, C7, C15, C16, C17 |
| | C0603 | 36 | C9-1, C9-2, C10, C18, C20, C21-1, C21-2, C22-1, C22-2, C24-1, C24-2, C25-1, C25-2, C26-1, C26-2, C27-1, C27-2, C28, C29, C30, C31, C32, C33, C34, C35, C36, C37, C38, C41, C43, C44, C48, C50, C51, C52, C53 |
| 100UF SMD CAP CERAMIC | C1206 | 3 | C39, C54, C55 |

| | | | |
|---|---|---|---|
| | C0603 | 1 | C42 |
| | C0603 | 1 | C45 |
| | C0603 | 2 | C47, C49 |
| Atmel CAN Bus Transciever | 8SOIC150 | 2 | CANA1, CANB1 |
| DIODE SCHOTTKY 0.5A 20V SOD-123 | SOD123 | 3 | D1, D2, D7 |
| LED 0805 GREEN 20MA | 0805_Diode | 4 | D3, D4, D5, D6 |
| LED 0805 RED 20MA | 0805_Diode | 3 | D8, D9, D10 |
| | R1206 | 1 | F1 |
| Isolator Interface IC 2.5 kV Bidirectional I2C Isolator 1.7MHz | 8SOIC150 | 2 | I1, I2 |
| CONN HEADER 3POS .100" SNGL SMD | CONN_1x3_100MIL_RA_SMT | 1 | J1 |
| Through Hole Micro USB Connector | CONN_USBMICROB_10118194-0001LF | 1 | J2 |
| Press-Fit Unthreaded Spacers, 7/32" OD, 1/8" Long | #4_PRESSFIT_FOOT_1/4 | 6 | K1, K2, K3, K4, K5, K6 |
| INDUCTOR POWER 1.5UH 7.5A SMD | SMD5230 | 2 | L1, L2 |
| INDUCTOR 100UH 270MA 1210 SMD | C1210 | 1 | L3 |
| Male Header, Pitch 1.27 mm, 2 x 5 Position, Height 6.12 mm, RoHS, Tube | SMTC-FTSH-105-01-L-DV-K_V | 1 | P1 |
| MOSFET P-CH 20V 35A PPK | POWERPAK_1212-8_SINGLE | 1 | Q1 |
| MOSFET N-CH 25V 5.8A SOT23 | 3SOT23 | 1 | Q2 |
| | R0603 | 16 | R1, R6, R7, R11, R19, R20, R21, R22, R23, R38, R40, R43, R44, R48, R52, R59 |
| | R0603 | 1 | R2 |
| | R0603 | 2 | R3, R9 |
| | R0603 | 1 | R4 |
| | R0603 | 2 | R5, R12 |
| | R0603 | 1 | R8 |
| | R0603 | 1 | R10 |
| | R0603 | 4 | R13, R14, R15, R16 |
| | R0603 | 1 | R17 |
| | R0603 | 1 | R18 |
| | R0603 | 6 | R24, R25, R34, R35, R36, R37 |
| | R0603 | 8 | R26, R29, R30, R31, R32, R33, R39, R41 |
| | R0603 | 2 | R27, R28 |

| | | | |
|---|---|---|---|
| | R0603 | 4 | R47, R49, R50, R51 |
| | R0603 | 5 | R53, R54, R55, R56, R58 |
| | R0603 | 1 | R57 |
| SWITCH SLIDE SPDT R/A 5A | SWITCH_500SSP1S1M6QEA | 1 | SW1 |
| SWITCH TACTILE SPST-NO 0.05A 12V | SWITCH_B3U-1000P | 1 | SW3 |
| BUCKBOOST TPS63070RNM, RNM0015A | TPS63070 | 2 | U1, U3 |
| IC REG LDO 3.3V .2A SOT23-5 | 5SOT23 | 2 | U2-1, U2-2 |
| Peak-Peak Signal Buzzer Single Tone 4kHz Magnetic 2 ~ 4V 78dB @ 3V, 10cm | BUZ_SMT-0540-T-7-R | 1 | U4 |
| ESP8266 Module by Expressif | ESP-WROOM-02 | 1 | U5 |
| 200G Accelcerometer | LGA_CC-14-1 | 2 | U6-1, U6-2 |
| Pressure Sensor 4.35 PSI ~ 18.13 PSI (30 kPa ~ 125 kPa) Absolute 10-WFLGA | 8 pin LGA | 2 | U7-1, U7-2 |
| Bosch BMI088 | BMI088 | 2 | U8-1, U8-2 |
| 4 Pin Bidirectional levelshifter 5v-3.3v | 14TSSOP65 | 1 | U9 |
| | SOT1762-1 | 1 | U10 |
| MICROSD CARD HOLDER, PUSH-PUSH | MICROSD_CARD_SOCKET | 1 | U11 |
| Atmel SAM ARM Cortex M4 | SAMD TQFP-64 | 1 | U12 |
| | 6SOT23 | 1 | U13 |
| CRYSTAL 32.768 KHZ 12.5 PF SMD | XTAL_TXC_9HT10 | 1 | X1 |

# Bill of Materials for BOM

**SpaceSalmon_2.0.BomDoc**

**SpaceSalmon_2.0.PrjPcb**

**None**

4/18/2019 01:34

18-Apr-19 1:34:24 AM

| Supplier Order Qty 1 | Manufacturer 1 |
|---|---|
| 2 | Samtec |
| 2 | Samtec |
| 1 | Taiyo Yuden |
| 1 | Keystone Electronics |
| 1 | Seiko |
| 15 | Taiyo Yuden |
| 6 | Samsung |
| 36 | Kyocera AVX |
| 3 | TDK |

| | |
|---|---|
| 1 | Yageo |
| 1 | Kyocera AVX |
| 2 | Murata |
| 2 | Microchip |
| 3 | ON Semiconductor / Fairchild |
| 4 | Osram Opto |
| 3 | Osram Opto |
| 1 | Eaton |
| 2 | Texas Instruments |
| 1 | Samtec |
| 1 | Amphenol FCI |
| 6 | McMaster |
| 2 | Vishay Dale |
| 1 | Taiyo Yuden |
| 1 | Samtec |
| 1 | Vishay Siliconix |
| 1 | Infineon |
| 16 | Yageo Phycomp |
| 1 | Yageo |
| 2 | Yageo |
| 1 | Yageo Phycomp |
| 2 | Yageo |
| 1 | Yageo |
| 1 | Yageo |
| 10 | Yageo |
| 1 | Yageo Phycomp |
| 1 | Yageo |
| 10 | Yageo |
| 10 | Yageo |
| 2 | Yageo |

| | |
|---|---|
| 10 | Yageo |
| 10 | Yageo |
| 1 | Yageo |
| 1 | ITT C&K |
| 1 | Omron |
| 2 | Texas Instruments |
| 2 | Microchip Micrel |
| 1 | Projects Unlimited |
| 1 | Espressif Systems |
| 2 | Analog Devices |
| 2 | Bosch Sensortec |
| 2 | Bosch Tools |
| 1 | Texas Instruments |
| 1 | NXP Freescale |
| 1 | 3M |
| 1 | Microchip |
| 1 | STMicroelectronics |
| 1 | TXC |

## Document [SpaceSalmon_2.0.BomDoc]

| Manufacturer Part Number 1 | Supplier Unit Price 1 | Supplier Subtotal per Board 1 | mn Name Error:' Supplier Order | mn Name Error:' Manufact |
|---|---|---|---|---|
| SSW-106-22-F-D-VS-K | 1.43 | 2.86 | | |
| TSM-106-03-F-DV | 0.762 | 1.52 | | |
| BK1608HW601-T | 0.1 | 0.1 | | |
| 1048 | 4.17 | 4.17 | | |
| MS621FE-FL11E | 2.04 | 2.04 | | |
| LMK107BJ106MALTD | 0.431 | 6.47 | | |
| CL10A226MO7JZNC | 0.87 | 5.22 | | |
| 06035C-104KAT2A | 0.119 | 4.28 | | |
| C3216X5R1E336M160AC | 1.37 | 4.11 | | |

| | | | | |
|---|---|---|---|---|
| CC0603KRX5R7BB475 | 0.43 | 0.43 | | |
| 06031C472JAT2A | 0.31 | 0.31 | | |
| GRM1885C1H220JA01D | 0.11 | 0.22 | | |
| ATA6561-GAQW-N | 0.55 | 1.1 | | |
| MBR0520L | 0.35753 | 1.07 | | |
| LGR971-KN-1 | 0.36 | 1.44 | | |
| Q62702P5182 | 0.36 | 1.08 | | |
| CC12H5A-TR | 1.01 | 1.01 | | |
| ISO1540DR | 4.8 | 9.6 | | |
| TSM-103-01-L-SH | 0.308 | 0.308 | | |
| 10118194-0001LF | 0.45 | 0.45 | | |
| 92985A630 | 0.41 | 2.46 | | |
| IHLP2020CZER1R5M11 | 2.39 | 4.78 | | |
| LBC3225T100KR | 0.21 | 0.21 | | |
| FTSH-105-01-F-DV-K | 1.7 | 1.7 | | |
| SI7615ADN-T1-GE3 | 0.86 | 0.86 | | |
| IRFML8244TRPBF | 0.44 | 0.44 | | |
| RC0603FR-0710KL | 0.024 | 0.384 | | |
| RC0603FR-07470KL | 0.1 | 0.1 | | |
| RC0603FR-07100KL | 0.1 | 0.2 | | |
| RC0603FR-07150KL | 0.1 | 0.1 | | |
| RC0603FR-0720KL | 0.1 | 0.2 | | |
| RC0603FR-07680KL | 0.1 | 0.1 | | |
| RC0603FR-07130KL | 0.13001 | 0.13001 | | |
| RC0603FR-07100RL | 0.024 | 0.096 | | |
| RC0603FR-074K7L | 0.1 | 0.1 | | |
| RC0603FR-07300RL | 0.1 | 0.1 | | |
| RC0603FR-070RL | 0.021 | 0.126 | | |
| RC0603FR-070RL | 0.021 | 0.168 | | |
| RC0603FR-07330RL | 0.1 | 0.2 | | |

| | | | | |
|---|---|---|---|---|
| RC0603FR-07100KL | 0.024 | 0.096 | | |
| RC0603FR-071KL | 0.024 | 0.12 | | |
| RC0603FR-071ML | 0.1 | 0.1 | | |
| 1101M2S3AQE2 | 4.17 | 4.17 | | |
| B3U-1000P | 1 | 1 | | |
| TPS630701RNMT | 2.76 | 5.52 | | |
| MIC5365-3.3YD5T5 | 0.27 | 0.54 | | |
| SMT-0540-T-7-R | 3.56 | 3.56 | | |
| ESP-WROOM-02 | 5 | 5 | | |
| ADXL375BCCZ | 11.23 | 22.46 | | |
| BMP388 | 3.93 | 7.86 | | |
| BMI088 | 7.99 | 15.98 | | |
| TXB0104PWR | 1.32 | 1.32 | | |
| MC33797BPEWR2 | 5.97 | 5.97 | | |
| 2908-05WB-MG | 3.88 | 3.88 | | |
| ATSAME51J20A-AU | 5.4 | 5.4 | | |
| USBLC6-2SC6 | 0.49 | 0.49 | | |
| 9HT10-32.768KEZF-T | 0.73 | 0.73 | | |

| mn Name Error:' Manufacturer Part Num | mn Name Error:' Supplier Unit P | Supplier Currency 1 | Total Price |
|---|---|---|---|
| | | USD | 2.86 |
| | | USD | 1.52 |
| | | USD | 0.1 |
| | | USD | 4.17 |
| | | USD | 2.04 |
| | | USD | 6.47 |
| | | USD | 5.22 |
| | | USD | 4.28 |
| | | USD | 4.11 |

| | | | |
|---|---|---|---|
| | | USD | 0.43 |
| | | USD | 0.31 |
| | | USD | 0.22 |
| | | USD | 1.1 |
| | | USD | 1.07 |
| | | USD | 1.44 |
| | | USD | 1.08 |
| | | USD | 1.01 |
| | | USD | 9.6 |
| | | USD | 0.308 |
| | | USD | 0.45 |
| | | USD | 2.46 |
| | | USD | 4.78 |
| | | USD | 0.21 |
| | | USD | 1.7 |
| | | USD | 0.86 |
| | | USD | 0.44 |
| | | USD | 0.384 |
| | | USD | 0.1 |
| | | USD | 0.2 |
| | | USD | 0.1 |
| | | USD | 0.2 |
| | | USD | 0.1 |
| | | USD | 0.13001 |
| | | USD | 0.096 |
| | | USD | 0.1 |
| | | USD | 0.1 |
| | | USD | 0.126 |
| | | USD | 0.168 |
| | | USD | 0.2 |

| | | | |
|---|---|---|---|
| | | USD | 0.096 |
| | | USD | 0.12 |
| | | USD | 0.1 |
| | | USD | 4.17 |
| | | USD | 1 |
| | | USD | 5.52 |
| | | USD | 0.54 |
| | | USD | 3.56 |
| | | USD | 5 |
| | | USD | 22.46 |
| | | USD | 7.86 |
| | | USD | 15.98 |
| | | USD | 1.32 |
| | | USD | 5.97 |
| | | USD | 3.88 |
| | | USD | 5.4 |
| | | USD | 0.49 |
| | | USD | 0.73 |
| | | **TOTAL PRICE** | 144.438 |