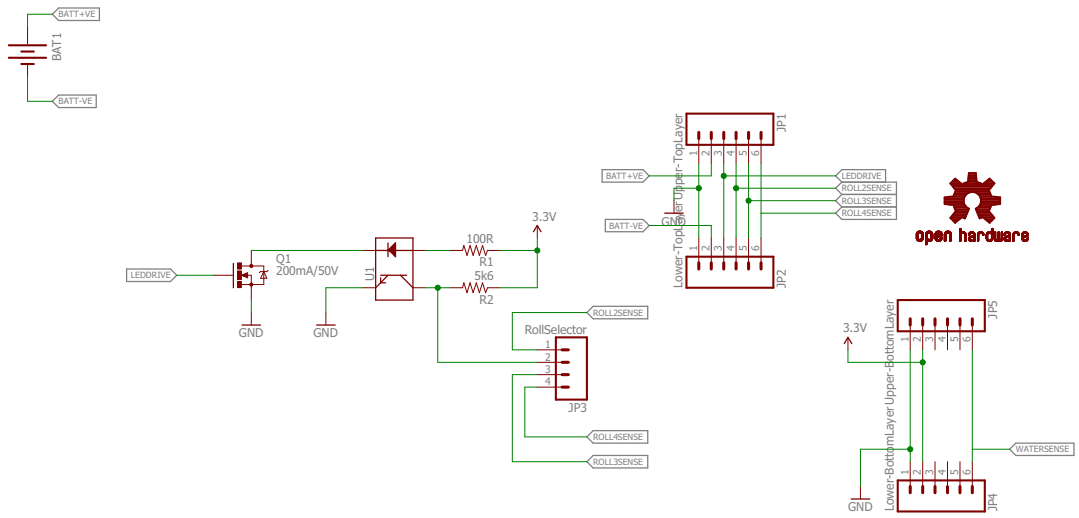

Released under the Creative Commons
Attribution Share-Alike 4.0 License
https://creativecommons.org/licenses/by-sa/4.0/

TITLE: LooRollSensorMiddleBoard

Design by:

REV:

Date: 18/04/2016 02:19

Sheet: 1/1