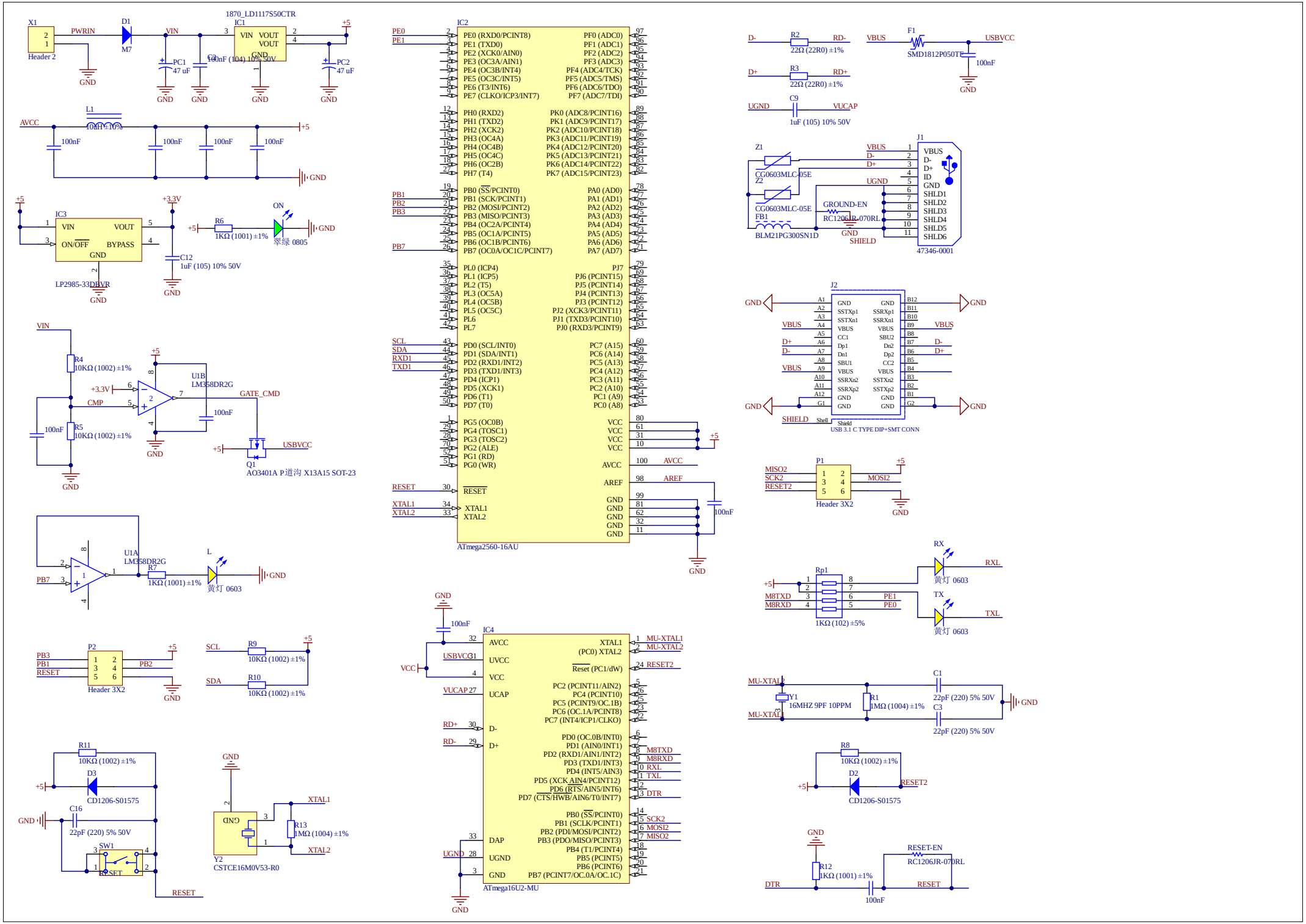
X1
Header 2
PWRIN
D1
M7
VIN
IC1
1870_LD1117S50CTR
VIN VOUT
VOUT
GND
+5
PC1
47 uF
C9
100nF (104) 10% 50V
PC2
47 uF
GND
AVCC
L1
10uH ±10%
100nF
IC3
LP2985-33DBVR
VIN VOUT
ON/OFF BYPASS
GND
+3.3V
C12
1uF (105) 10% 50V
R6
1KΩ (1001) ±1%
ON
翠绿 0805
R4
10KΩ (1002) ±1%
R5
10KΩ (1002) ±1%
CMP
U1B
LM358DR2G
GATE_CMD
Q1
AO3401A P道沟 X13A15 SOT-23
USBVCC
U1A
LM358DR2G
R7
1KΩ (1001) ±1%
L
黄灯 0603
PB7
P2
Header 3X2
PB3
PB1
RESET
PB2
SCL
SDA
R9
10KΩ (1002) ±1%
R10
10KΩ (1002) ±1%
R11
10KΩ (1002) ±1%
D3
CD1206-S01575
C16
22pF (220) 5% 50V
SW1
RESET
XTAL1
XTAL2
R13
1MΩ (1004) ±1%
Y2
CSTCE16M0V53-R0
IC2
ATmega2560-16AU
PE0
PE1
PB1
PB2
PB3
PB7
SCL
SDA
RXD1
TXD1
RESET
XTAL1
XTAL2
PE0 (RXD0/PCINT8)
PE1 (TXD0)
PE2 (XCK0/AIN0)
PE3 (OC3A/AIN1)
PE4 (OC3B/INT4)
PE5 (OC3C/INT5)
PE6 (T3/INT6)
PE7 (CLKO/ICP3/INT7)
PH0 (RXD2)
PH1 (TXD2)
PH2 (XCK2)
PH3 (OC4A)
PH4 (OC4B)
PH5 (OC4C)
PH6 (OC2B)
PH7 (T4)
PB0 (SS/PCINT0)
PB1 (SCK/PCINT1)
PB2 (MOSI/PCINT2)
PB3 (MISO/PCINT3)
PB4 (OC2A/PCINT4)
PB5 (OC1A/PCINT5)
PB6 (OC1B/PCINT6)
PB7 (OC0A/OC1C/PCINT7)
PL0 (ICP4)
PL1 (ICP5)
PL2 (T5)
PL3 (OC5A)
PL4 (OC5B)
PL5 (OC5C)
PL6
PL7
PD0 (SCL/INT0)
PD1 (SDA/INT1)
PD2 (RXD1/INT2)
PD3 (TXD1/INT3)
PD4 (ICP1)
PD5 (XCK1)
PD6 (T1)
PD7 (T0)
PG5 (OC0B)
PG4 (TOSC1)
PG3 (TOSC2)
PG2 (ALE)
PG1 (RD)
PG0 (WR)
RESET
XTAL1
XTAL2
PF0 (ADC0)
PF1 (ADC1)
PF2 (ADC2)
PF3 (ADC3)
PF4 (ADC4/TCK)
PF5 (ADC5/TMS)
PF6 (ADC6/TDO)
PF7 (ADC7/TDI)
PK0 (ADC8/PCINT16)
PK1 (ADC9/PCINT17)
PK2 (ADC10/PCINT18)
PK3 (ADC11/PCINT19)
PK4 (ADC12/PCINT20)
PK5 (ADC13/PCINT21)
PK6 (ADC14/PCINT22)
PK7 (ADC15/PCINT23)
PA0 (AD0)
PA1 (AD1)
PA2 (AD2)
PA3 (AD3)
PA4 (AD4)
PA5 (AD5)
PA6 (AD6)
PA7 (AD7)
PJ7
PJ6 (PCINT15)
PJ5 (PCINT14)
PJ4 (PCINT13)
PJ3 (PCINT12)
PJ2 (XCK3/PCINT11)
PJ1 (TXD3/PCINT10)
PJ0 (RXD3/PCINT9)
PC7 (A15)
PC6 (A14)
PC5 (A13)
PC4 (A12)
PC3 (A11)
PC2 (A10)
PC1 (A9)
PC0 (A8)
VCC
AVCC
AREF
GND
100nF
IC4
ATmega16U2-MU
VCC
USBVCC
VUCAP
RD+
RD-
UGND
AVCC
UVCC
VCC
UCAP
D-
D+
DAP
UGND
GND
XTAL1
(PC0) XTAL2
Reset (PC1/dW)
PC2 (PCINT11/AIN2)
PC4 (PCINT10)
PC5 (PCINT9/OC.1B)
PC6 (OC.1A/PCINT8)
PC7 (INT4/ICP1/CLKO)
PD0 (OC.0B/INT0)
PD1 (AIN0/INT1)
PD2 (RXD1/AIN1/INT2)
PD3 (TXD1/INT3)
PD4 (INT5/AIN3)
PD5 (XCK AIN4/PCINT12)
PD6 (RTS/AIN5/INT6)
PD7 (CTS/HWB/AIN6/T0/INT7)
PB0 (SS/PCINT0)
PB1 (SCLK/PCINT1)
PB2 (PDI/MOSI/PCINT2)
PB3 (PDO/MISO/PCINT3)
PB4 (T1/PCINT4)
PB5 (PCINT5)
PB6 (PCINT6)
PB7 (PCINT7/OC.0A/OC.1C)
MU-XTAL1
MU-XTAL2
RESET2
M8TXD
M8RXD
RXL
TXL
DTR
SCK2
MOSI2
MISO2
R2
22Ω (22R0) ±1%
R3
22Ω (22R0) ±1%
C9
1uF (105) 10% 50V
F1
SMD1812P050TF
USBVCC
Z1
CG0603MLC-05E
Z2
CG0603MLC-05E
FB1
BLM21PG300SN1D
GROUND-EN
RC1206JR-070RL
SHIELD
J1
47346-0001
VBUS
D-
D+
ID
GND
SHLD1
SHLD2
SHLD3
SHLD4
SHLD5
SHLD6
J2
USB 3.1 C TYPE DIP+SMT CONN
SSTXp1
SSTXn1
SSRXp1
SSRXn1
CC1
Dp1
Dn1
SBU1
SBU2
Dn2
Dp2
CC2
SSRXn2
SSRXp2
SSTXn2
SSTXp2
Shell
P1
Header 3X2
MOSI2
Rp1
1KΩ (102) ±5%
RX
TX
C1
22pF (220) 5% 50V
C3
22pF (220) 5% 50V
Y1
16MHZ 9PF 10PPM
R1
1MΩ (1004) ±1%
R8
10KΩ (1002) ±1%
D2
CD1206-S01575
R12
1KΩ (1001) ±1%
RESET-EN
RC1206JR-070RL