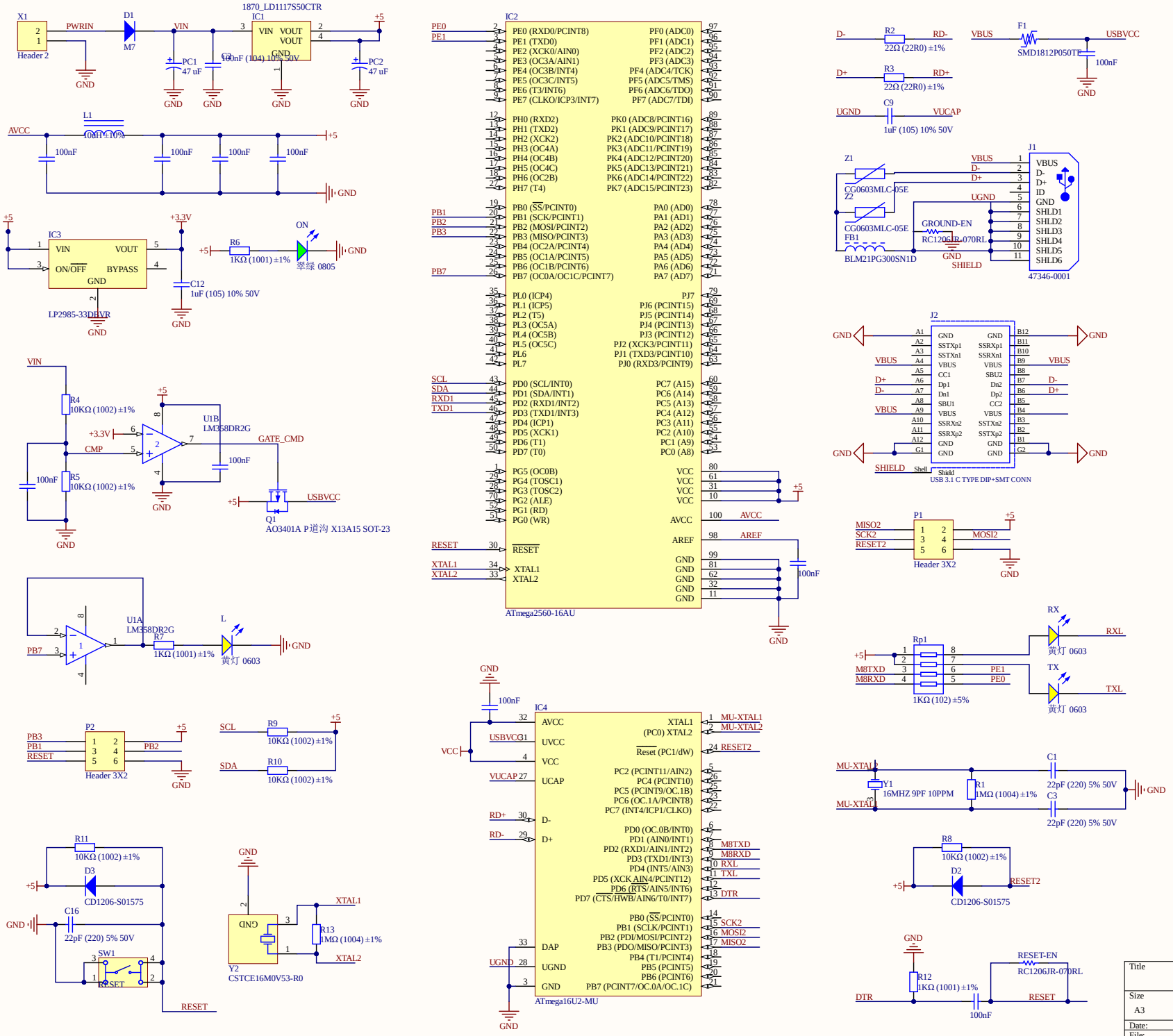
1870_LD1117S50CTR
IC1
VIN VOUT
VOUT
GND
X1
Header 2
PWRIN
D1
M7
VIN
PC1 47 uF
C2 100nF (104) 10% 50V
PC2 47 uF
+5
GND
L1
10uH ±10%
AVCC
100nF
IC3
VIN VOUT
ON/OFF BYPASS
GND
LP2985-33DBVR
+3.3V
C12 1uF (105) 10% 50V
R6 1KΩ (1001) ±1%
ON
翠绿 0805
R4 10KΩ (1002) ±1%
R5 10KΩ (1002) ±1%
CMP
U1B LM358DR2G
GATE_CMD
Q1 AO3401A P道沟 X13A15 SOT-23
USBVCC
U1A LM358DR2G
R7 1KΩ (1001) ±1%
L 黄灯 0603
PB7
P2 Header 3X2
PB3 PB1 RESET PB2
SCL R9 10KΩ (1002) ±1%
SDA R10 10KΩ (1002) ±1%
R11 10KΩ (1002) ±1%
D3 CD1206-S01575
C16 22pF (220) 5% 50V
SW1 RESET
Y2 CSTCE16M0V53-R0
R13 1MΩ (1004) ±1%
XTAL1 XTAL2
IC2
ATmega2560-16AU
PE0 PE1 PB1 PB2 PB3 PB7 SCL SDA RXD1 TXD1 RESET XTAL1 XTAL2
PE0 (RXD0/PCINT8) PE1 (TXD0) PE2 (XCK0/AIN0) PE3 (OC3A/AIN1) PE4 (OC3B/INT4) PE5 (OC3C/INT5) PE6 (T3/INT6) PE7 (CLKO/ICP3/INT7)
PH0 (RXD2) PH1 (TXD2) PH2 (XCK2) PH3 (OC4A) PH4 (OC4B) PH5 (OC4C) PH6 (OC2B) PH7 (T4)
PB0 (SS/PCINT0) PB1 (SCK/PCINT1) PB2 (MOSI/PCINT2) PB3 (MISO/PCINT3) PB4 (OC2A/PCINT4) PB5 (OC1A/PCINT5) PB6 (OC1B/PCINT6) PB7 (OC0A/OC1C/PCINT7)
PL0 (ICP4) PL1 (ICP5) PL2 (T5) PL3 (OC5A) PL4 (OC5B) PL5 (OC5C) PL6 PL7
PD0 (SCL/INT0) PD1 (SDA/INT1) PD2 (RXD1/INT2) PD3 (TXD1/INT3) PD4 (ICP1) PD5 (XCK1) PD6 (T1) PD7 (T0)
PG5 (OC0B) PG4 (TOSC1) PG3 (TOSC2) PG2 (ALE) PG1 (RD) PG0 (WR)
PF0 (ADC0) PF1 (ADC1) PF2 (ADC2) PF3 (ADC3) PF4 (ADC4/TCK) PF5 (ADC5/TMS) PF6 (ADC6/TDO) PF7 (ADC7/TDI)
PK0 (ADC8/PCINT16) PK1 (ADC9/PCINT17) PK2 (ADC10/PCINT18) PK3 (ADC11/PCINT19) PK4 (ADC12/PCINT20) PK5 (ADC13/PCINT21) PK6 (ADC14/PCINT22) PK7 (ADC15/PCINT23)
PA0 (AD0) PA1 (AD1) PA2 (AD2) PA3 (AD3) PA4 (AD4) PA5 (AD5) PA6 (AD6) PA7 (AD7)
PJ7 PJ6 (PCINT15) PJ5 (PCINT14) PJ4 (PCINT13) PJ3 (PCINT12) PJ2 (XCK3/PCINT11) PJ1 (TXD3/PCINT10) PJ0 (RXD3/PCINT9)
PC7 (A15) PC6 (A14) PC5 (A13) PC4 (A12) PC3 (A11) PC2 (A10) PC1 (A9) PC0 (A8)
VCC VCC VCC VCC AVCC AREF GND GND GND GND GND
IC4
ATmega16U2-MU
AVCC UVCC VCC UCAP D- D+ DAP UGND GND
XTAL1 (PC0) XTAL2 Reset (PC1/dW)
PC2 (PCINT11/AIN2) PC4 (PCINT10) PC5 (PCINT9/OC.1B) PC6 (OC.1A/PCINT8) PC7 (INT4/ICP1/CLKO)
PD0 (OC.0B/INT0) PD1 (AIN0/INT1) PD2 (RXD1/AIN1/INT2) PD3 (TXD1/INT3) PD4 (INT5/AIN3) PD5 (XCK AIN4/PCINT12) PD6 (RTS/AIN5/INT6) PD7 (CTS/HWB/AIN6/T0/INT7)
PB0 (SS/PCINT0) PB1 (SCLK/PCINT1) PB2 (PDI/MOSI/PCINT2) PB3 (PDO/MISO/PCINT3) PB4 (T1/PCINT4) PB5 (PCINT5) PB6 (PCINT6) PB7 (PCINT7/OC.0A/OC.1C)
MU-XTAL1 MU-XTAL2 RESET2 M8TXD M8RXD RXL TXL DTR SCK2 MOSI2 MISO2
VCC USBVCC VUCAP RD+ RD- UGND
R2 22Ω (22R0) ±1%
R3 22Ω (22R0) ±1%
C9 1uF (105) 10% 50V
F1 SMD1812P050TF
USBVCC
Z1 CG0603MLC-05E
Z2 CG0603MLC-05E
FB1 BLM21PG300SN1D
GROUND-EN RC1206JR-070RL
J1 47346-0001
VBUS D- D+ ID GND SHLD1 SHLD2 SHLD3 SHLD4 SHLD5 SHLD6
J2
USB 3.1 C TYPE DIP+SMT CONN
P1 Header 3X2
MISO2 SCK2 RESET2 MOSI2
Rp1 1KΩ (102) ±5%
M8TXD M8RXD PE1 PE0
RX 黄灯 0603 RXL
TX 黄灯 0603 TXL
Y1 16MHZ 9PF 10PPM
R1 1MΩ (1004) ±1%
C1 22pF (220) 5% 50V
C3 22pF (220) 5% 50V
R8 10KΩ (1002) ±1%
D2 CD1206-S01575
R12 1KΩ (1001) ±1%
RESET-EN RC1206JR-070RL
100nF
Title
Size A3
Number
Revision
Date: 2/04/2020
Sheet of
File: C:\Users\..\ArduinoMega2560.SchDoc
Drawn By: