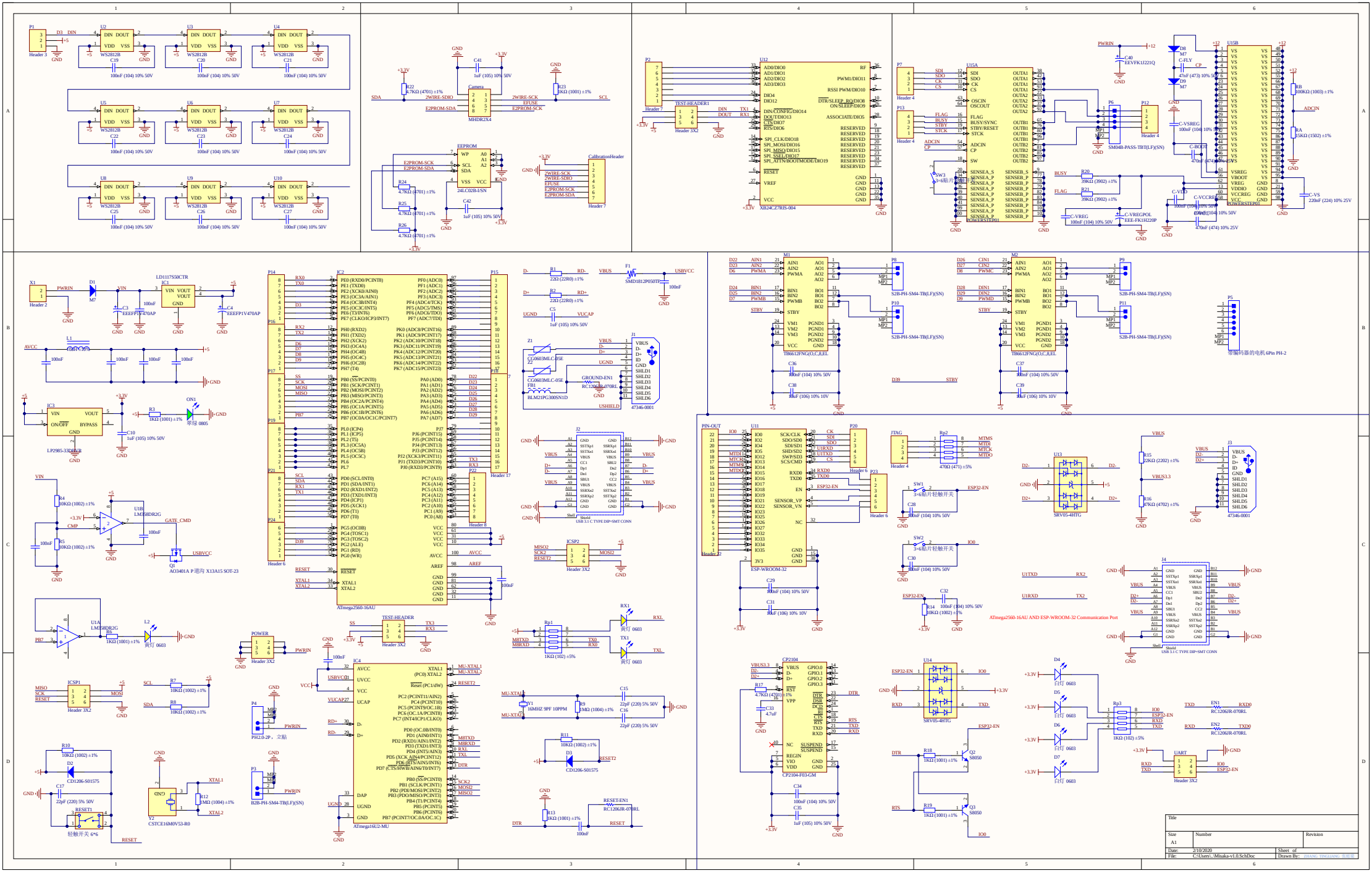
P1
Header 3
U2
U3
U4
U5
U6
U7
U8
U9
U10
WS2812B
DIN DOUT
VDD VSS
100nF (104) 10% 50V
Camera
MHDR2X4
ZWIRE-SDIO
E2PROM-SDA
ZWIRE-SCK
EFUSE
E2PROM-SCK
EEPROM
24LC02B-I/SN
R22 4.7KΩ (4701) ±1%
R23 1KΩ (1001) ±1%
R24 4.7KΩ (4701) ±1%
R25 4.7KΩ (4701) ±1%
R26 4.7KΩ (4701) ±1%
C41 1uF (105) 10% 50V
C42 1uF (105) 10% 50V
CalibrationHeader
Header 7
P2
Header 7
TEST-HEADER1
Header 3X2
U12
XB24C27RIS-004
P7
Header 4
U15A
P13
Header 4
P6
SM04B-PASS-TBT(LF)(SN)
P12
Header 4
U15B
PWRIN
C40 EEVFK1J221Q
D8 M7
C-FLY
D9 M7
C-VSREG 100nF (104) 10% 50V
C-BOOT 470nF (474) 10% 50V
R20 39KΩ (3902) ±1%
R21 39KΩ (3902) ±1%
C-VREG 100nF (104) 10% 50V
C-VREGPOL EEE-FK1H220P
C-VLD 100nF (104) 10% 50V
C-VCCREG 100nF (104) 10% 50V
C-VS 220nF (224) 10% 25V
470nF (474) 10% 25V
RB 100KΩ (1003) ±1%
RA 15KΩ (1502) ±1%
ADCIN
BUSY
FLAG
SW3 3×6贴片轻触开关
X1
Header 2
D1 M7
PWRIN
LD1117S50CTR
IC1
C3 EEEFP1V470AP
C4 EEEFP1V470AP
L1 (MPZ1608)
100nF
AVCC
IC3
LP2985-33DBVR
R3 1KΩ (1001) ±1%
ON1 常绿 0805
C10 1uF (105) 10% 50V
VIN
R4 10KΩ (1002) ±1%
R5 10KΩ (1002) ±1%
U1B LMC6482IDR2G
GATE_CMD
CMP
Q1 AO3401A P道沟 X13A15 SOT-23
USBVCC
U1A LMC6482IDR2G
R6 1KΩ (1001) ±1%
L2
黄灯 0603
ICSP1
Header 3X2
MISO
SCK
RESET
MOSI
R7 10KΩ (1002) ±1%
R8 10KΩ (1002) ±1%
R10 10KΩ (1002) ±1%
D2 CD1206-S01575
C17 22pF (220) 5% 50V
RESET1
轻触开关 6*6
Y2 CSTCE16M0V53-R0
R12 1MΩ (1004) ±1%
XTAL1
XTAL2
P4
PH2.0-2P，立贴
P3
B2B-PH-SM4-TB(LF)(SN)
POWER
Header 3X2
IC2
ATmega2560-16AU
P14
P15
P16
P17
P18
P19
P21
P22
P24
Header 6
Header 17
Header 8
IC4
ATmega16U2-MU
TEST-HEADER
Header 3X2
Rp1 1KΩ (102) ±5%
RX1
TX1
黄灯 0603
MU-XTAL1
MU-XTAL2
Y1 16MHZ 9PF 10PPM
R9 1MΩ (1004) ±1%
C15 22pF (220) 5% 50V
C16 22pF (220) 5% 50V
R11 10KΩ (1002) ±1%
D3 CD1206-S01575
RESET2
R13 1KΩ (1001) ±1%
RESET-EN1
RC1206JR-070RL
RESET
DTR
R1 22Ω (22R0) ±1%
R2 22Ω (22R0) ±1%
C5 1uF (105) 10% 50V
F1 SMD1812P050TF
USBVCC
Z1 CG0603MLC-05E
Z2 CG0603MLC-05E
FB1 BLM21PG300SN1D
GROUND-EN1
RC1206JR-070RL
J1
47346-0001
J2
USB 3.1 C TYPE DIP+SMT CONN
ICSP2
Header 3X2
M1
TB6612FNG(O,C,B,EL
P8 S2B-PH-SM4-TB(LF)(SN)
P10 S2B-PH-SM4-TB(LF)(SN)
C36 100nF (104) 10% 50V
C38 10uF (106) 10% 10V
M2
TB6612FNG(O,C,B,EL
P9 S2B-PH-SM4-TB(LF)(SN)
P11 S2B-PH-SM4-TB(LF)(SN)
C37 100nF (104) 10% 50V
C39 10uF (106) 10% 10V
P5
带编码器的电机 6Pin PH-2
PIN-OUT
Header 12
U11
ESP-WROOM-32
P20
Header 6
P23
Header 6
ITAG
Header 4
Rp2 470Ω (471) ±5%
SW1 3×6贴片轻触开关
SW2 3×6贴片轻触开关
C28 100nF (104) 10% 50V
C30 100nF (104) 10% 50V
C29 100nF (104) 10% 50V
C31 10uF (106) 10% 10V
U13 SRV05-4HTG
R15 22KΩ (2202) ±1%
R16 47KΩ (4702) ±1%
VBUS3.3
J3
47346-0001
J4
USB 3.1 C TYPE DIP+SMT CONN
U1TXD
U1RXD
ATmega2560-16AU AND ESP-WROOM-32 Communication Port
C32 100nF (104) 10% 50V
R14 10KΩ (1002) ±1%
CP2104
CP2104-F03-GM
C33 4.7uF
R17 4.7KΩ (4701) ±1%
C34 100nF (104) 10% 50V
C35 1uF (105) 10% 50V
U14 SRV05-4HTG
Q2 S8050
Q3 S8050
R18 1KΩ (1001) ±1%
R19 1KΩ (1001) ±1%
D4 白灯 0603
D5 白灯 0603
D6 白灯 0603
D7 白灯 0603
Rp3 1KΩ (102) ±5%
EN1 RC1206JR-070RL
EN2 RC1206JR-070RL
UART
Header 3X2
Title
Size A1
Number
Revision
Date: 2/10/2020
Sheet of
File: C:\Users\..\Misaka-v1.0.SchDoc
Drawn By: ZHANG TINGJIANG 张庭姜

U12

Recommended Keepout Area for PCB Antenna (All Layers)

All rights reserved