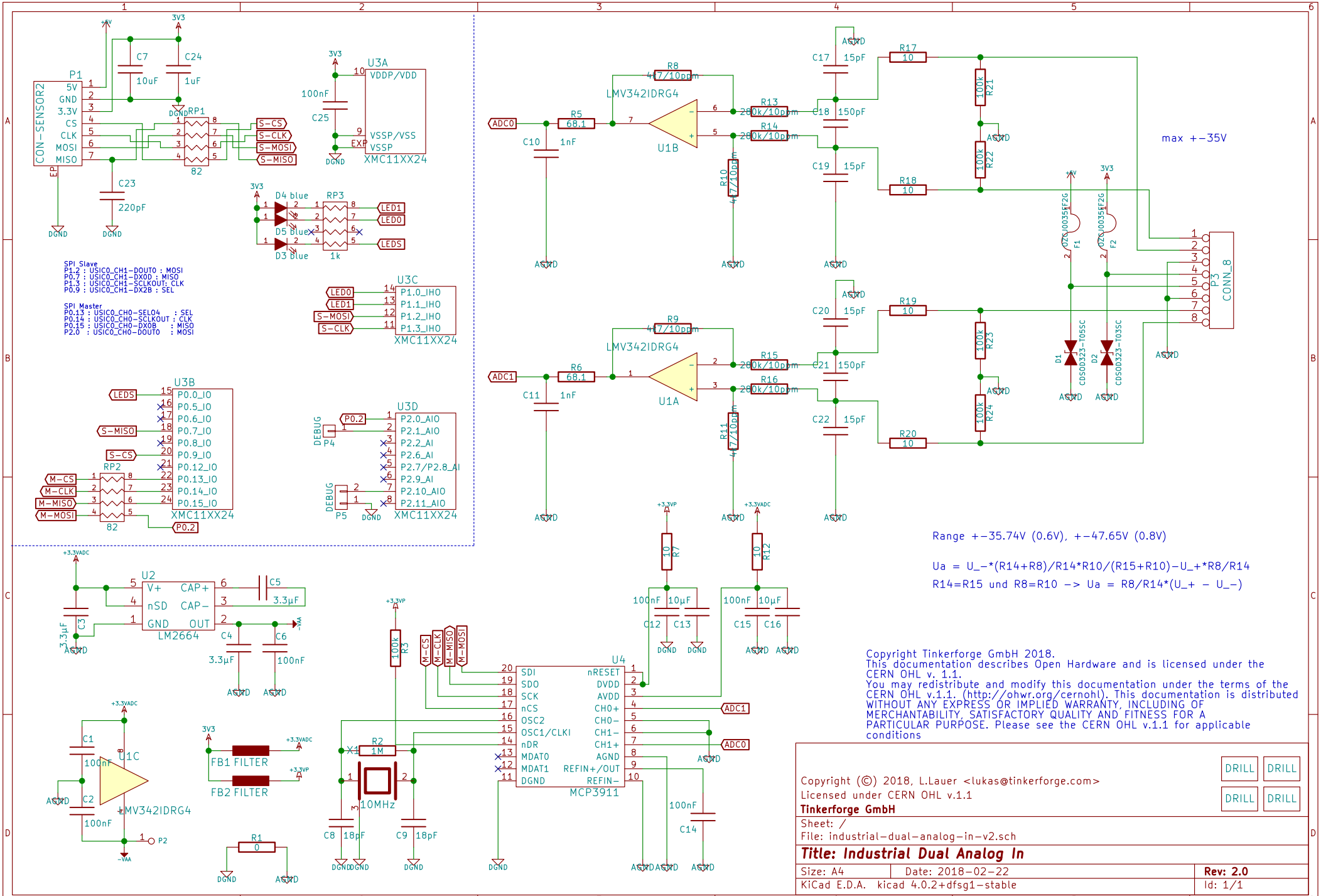
P1
CON-SENSOR2
5V
GND
3.3V
CS
CLK
MOSI
MISO
EP
C7
10uF
C24
1uF
C23
220pF
RP1
82
S-CS
S-CLK
S-MOSI
S-MISO
U3A
VDDP/VDD
VSSP/VSS
VSSP
EXP
XMC11XX24
100nF
C25
D4 blue
D5 Blue
D3 blue
RP3
1k
LED1
LED0
LED5
U3C
P1.0_IHO
P1.1_IHO
P1.2_IHO
P1.3_IHO
SPI Slave
P1.2 : USIC0_CH1-DOUT0 : MOSI
P0.7 : USIC0_CH1-DX0D : MISO
P1.3 : USIC0_CH1-SCLKOUT: CLK
P0.9 : USIC0_CH1-DX2B : SEL
SPI Master
P0.13 : USIC0_CH0-SELO4 : SEL
P0.14 : USIC0_CH0-SCLKOUT : CLK
P0.15 : USIC0_CH0-DX0B : MISO
P2.0 : USIC0_CH0-DOUT0 : MOSI
U3B
P0.0_IO
P0.5_IO
P0.6_IO
P0.7_IO
P0.8_IO
P0.9_IO
P0.12_IO
P0.13_IO
P0.14_IO
P0.15_IO
RP2
M-CS
M-CLK
M-MISO
M-MOSI
U3D
P2.0_AIO
P2.1_AIO
P2.2_AI
P2.6_AI
P2.7/P2.8_AI
P2.9_AI
P2.10_AIO
P2.11_AIO
DEBUG
P4
P5
U2
V+
nSD
GND
CAP+
CAP-
OUT
LM2664
C5
3.3µF
C3
C4
C6
100nF
U1C
LMV342IDRG4
C1
C2
P2
FB1 FILTER
FB2 FILTER
R1
0
R2
1M
X1
10MHz
C8
18pF
C9
R3
100k
U4
MCP3911
SDI
SDO
SCK
nCS
OSC2
OSC1/CLKI
nDR
MDAT0
MDAT1
DGND
nRESET
DVDD
AVDD
CH0+
CH0-
CH1-
CH1+
AGND
REFIN+/OUT
REFIN-
ADC1
ADC0
C14
R7
R12
C12
C13
C15
C16
ADC0
R5
68.1
C10
1nF
R8
47/10ppm
LMV342IDRG4
U1B
R13
200k/10ppm
R14
200k/10ppm
R10
47/10ppm
C17
15pF
C18
150pF
C19
15pF
R17
10
R18
10
R21
100k
R22
100k
ADC1
R6
68.1
C11
1nF
R9
47/10ppm
U1A
R15
200k/10ppm
R16
200k/10ppm
R11
47/10ppm
C20
15pF
C21
150pF
C22
15pF
R19
10
R20
10
R23
100k
R24
100k
max +-35V
F1
F2
D1
D2
CDSOD323-T05SC
P3
CONN_8
Range +-35.74V (0.6V), +-47.65V (0.8V)
Ua = U_-*(R14+R8)/R14*R10/(R15+R10)-U_+*R8/R14
R14=R15 und R8=R10 -> Ua = R8/R14*(U_+ - U_-)
Copyright Tinkerforge GmbH 2018.
This documentation describes Open Hardware and is licensed under the CERN OHL v. 1.1.
You may redistribute and modify this documentation under the terms of the CERN OHL v.1.1. (http://ohwr.org/cernohl). This documentation is distributed WITHOUT ANY EXPRESS OR IMPLIED WARRANTY, INCLUDING OF MERCHANTABILITY, SATISFACTORY QUALITY AND FITNESS FOR A PARTICULAR PURPOSE. Please see the CERN OHL v.1.1 for applicable conditions
Copyright (©) 2018, L.Lauer <lukas@tinkerforge.com>
Licensed under CERN OHL v.1.1
Tinkerforge GmbH
Sheet: /
File: industrial-dual-analog-in-v2.sch
Title: Industrial Dual Analog In
Size: A4
Date: 2018-02-22
Rev: 2.0
KiCad E.D.A. kicad 4.0.2+dfsg1-stable
Id: 1/1
DRILL
DRILL
DRILL
DRILL