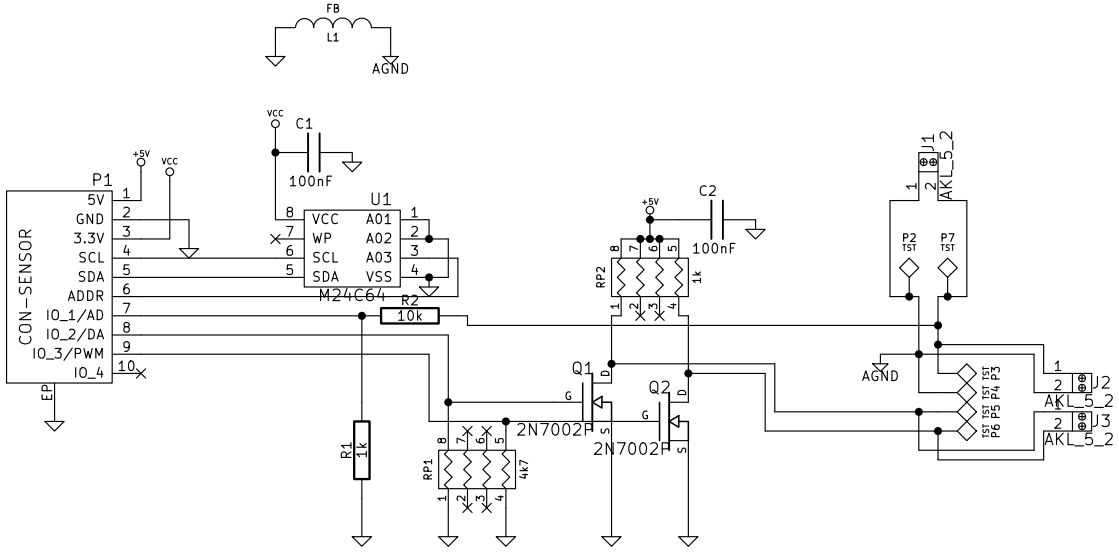

DRILL	DRILL		
DRILL	DRILL		

Copyright Tinkerforge GmbH 2013.
This documentation describes Open Hardware and is licensed under the CERN OHL v. 1.1.
You may redistribute and modify this documentation under the terms of the CERN OHL v.1.1. (http://ohwr.org/cernohl). This documentation is distributed WITHOUT ANY EXPRESS OR IMPLIED WARRANTY, INCLUDING OF MERCHANTABILITY, SATISFACTORY QUALITY AND FITNESS FOR A PARTICULAR PURPOSE. Please see the CERN OHL v.1.1 for applicable conditions

Copyright (©) 2013, B.Nordmeyer <bastian@tinkerforge.com>
Licensed under CERN OHL v.1.1
Tinkerforge GmbH

File: led_strip.sch		
Sheet: /		
Title: LED Strip Bricklet		
Size: A4	*Date: 25 oct 2013*	*Rev: 1.0*
KiCad E.D.A.		Id: 1/1