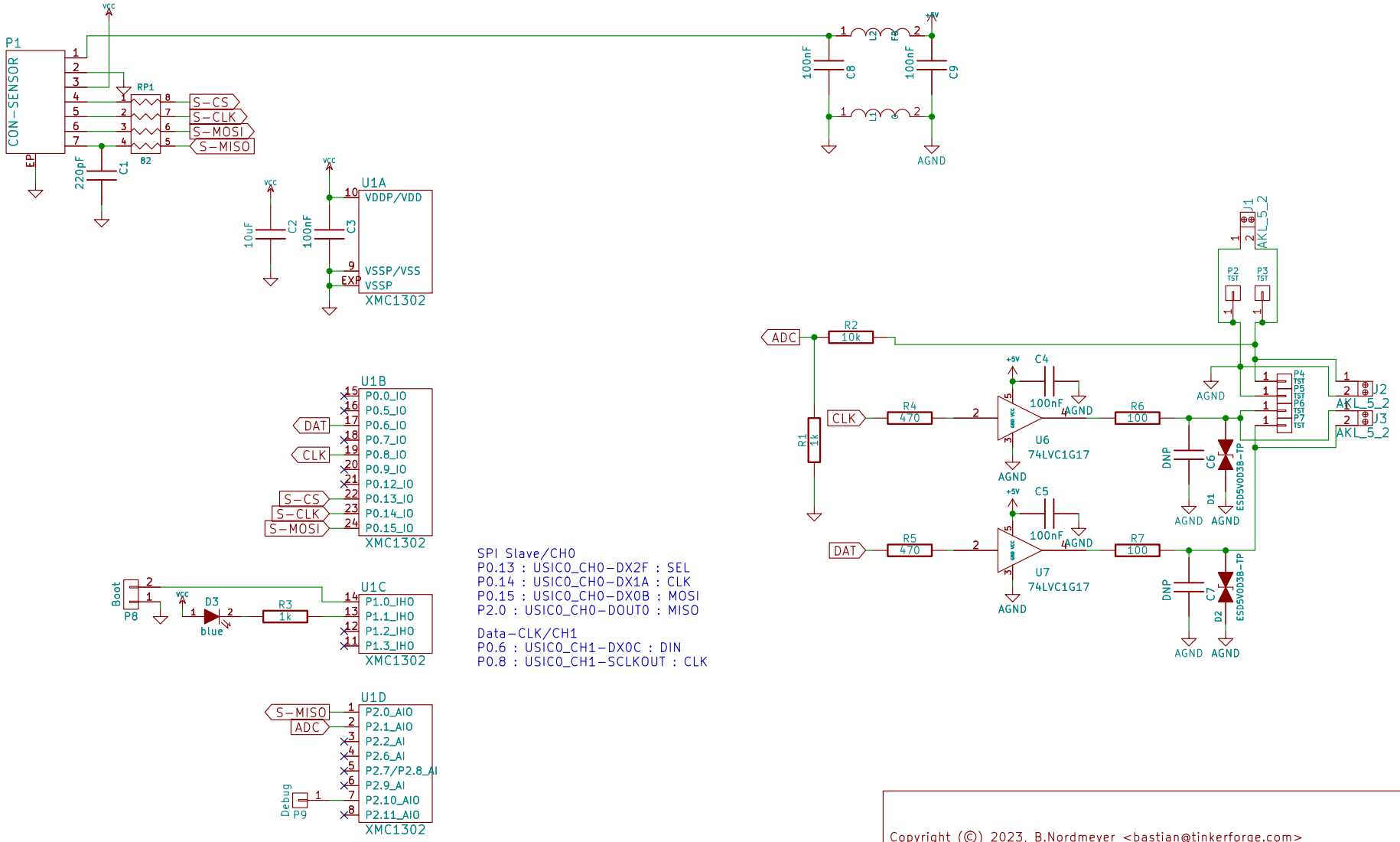

SPI Slave/CH0
P0.13 : USIC0_CH0-DX2F : SEL
P0.14 : USIC0_CH0-DX1A : CLK
P0.15 : USIC0_CH0-DX0B : MOSI
P2.0 : USIC0_CH0-DOUT0 : MISO

Data-CLK/CH1
P0.6 : USIC0_CH1-DX0C : DIN
P0.8 : USIC0_CH1-SCLKOUT : CLK

DRILL	DRILL		
DRILL	DRILL		

Copyright (©) 2023, B.Nordmeyer <bastian@tinkerforge.com>
Licensed under CERN OHL v.1.1
Tinkerforge GmbH

Sheet: /
File: led-strip-v2.kicad_sch

Title: LED Strip Bricklet

Size: A4	Date: 2023-01-25	**Rev: 2.2**
KiCad E.D.A. kicad (6.0.7)		Id: 1/1

Copyright Tinkerforge GmbH 2023.
This documentation describes Open Hardware and is licensed under the CERN OHL v. 1.1.
You may redistribute and modify this documentation under the terms of the CERN OHL v.1.1. (http://ohwr.org/cernohl). This documentation is distributed WITHOUT ANY EXPRESS OR IMPLIED WARRANTY, INCLUDING OF MERCHANTABILITY, SATISFACTORY QUALITY AND FITNESS FOR A PARTICULAR PURPOSE. Please see the CERN OHL v.1.1 for applicable conditions