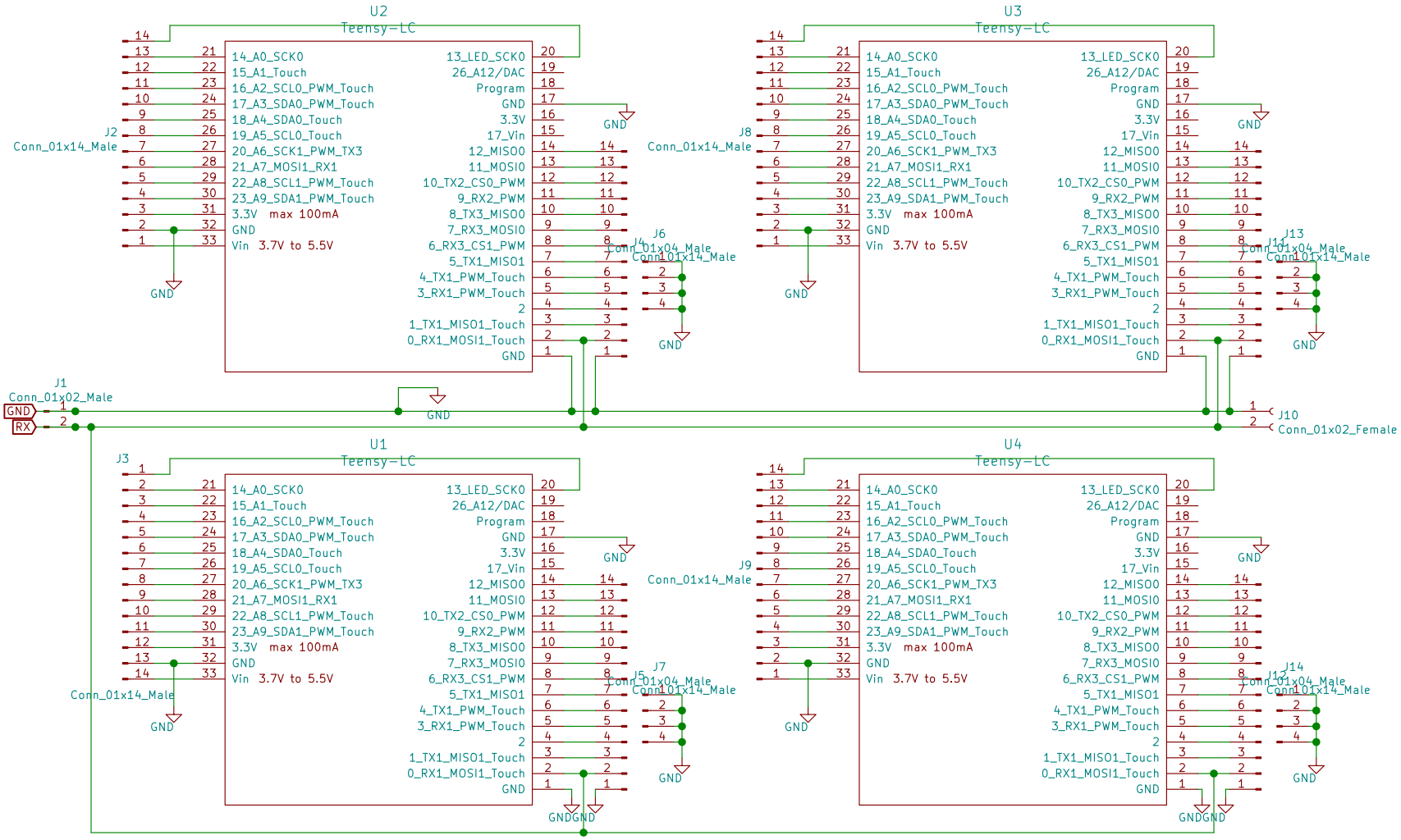

Sohom Roy

Sheet: /

File: TeensyPCB.sch

Title: Teensy PCB

Size: USLetter	Date: 2020-08-07	**Rev: 1**
KiCad E.D.A. kicad (5.1.6-0-10_14)		Id: 1/1