BLOCK DIAGRAM: Refer to schematic for parts that make up this diagram.

1. 7B
2. 1E, 1D, 3C
3. Crystal, 18.432 MHZ
4. A0 through A15 on Z80 CPU: buffered by 7D, 7E, 8D
5. D0 through D7 on Z80 CPU; buffered by 8H, 8F
6. 2114: 3H, 3F, 7N, 7P
   2101: 4F, 5F
   93425: 1N, 1P, 1R, 1S, 1T
7. All Eprom
8. 6H, 6J, 4E, 5E, 2E, 3E, 2F
9. 8D
10. 8P
11. 8N, 8M, 9N, 5R, 4R, 5S, 4S, 5P
12. 9D, 9E, 9F, 9C
13. 9R, 8R, 8S, 8T, 9J, 9M, 6T, 7T, 7S, 9L
14. 1A, 1B, 2A, 2B, 2D, 6N, 6H, 6B, 6F, 3S, 3R, 5B
15. All Eprom
16. 2H, 2J, 2K, 2L, 1U, 3L
17. 6M, 6L
18. CRT (monitor)
19. Control Panel

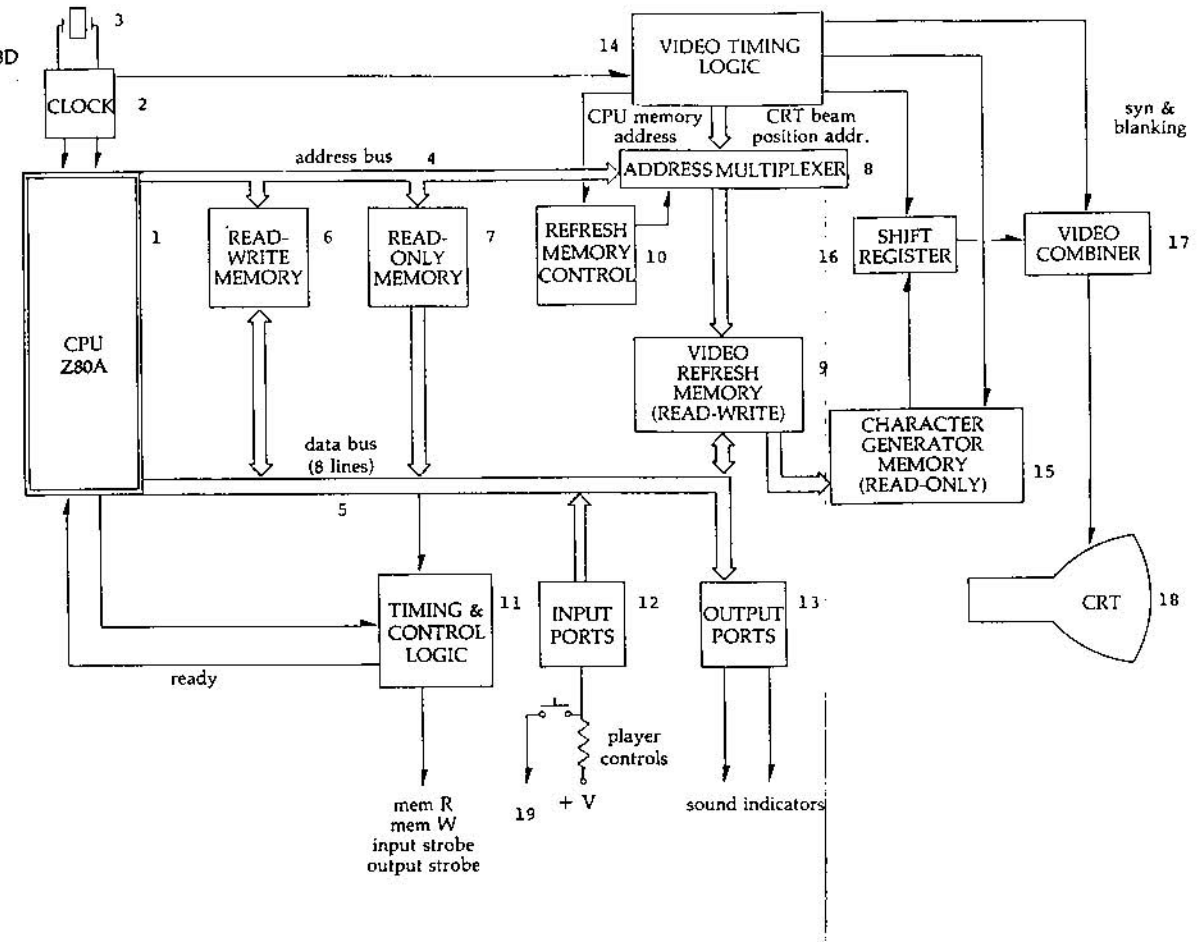

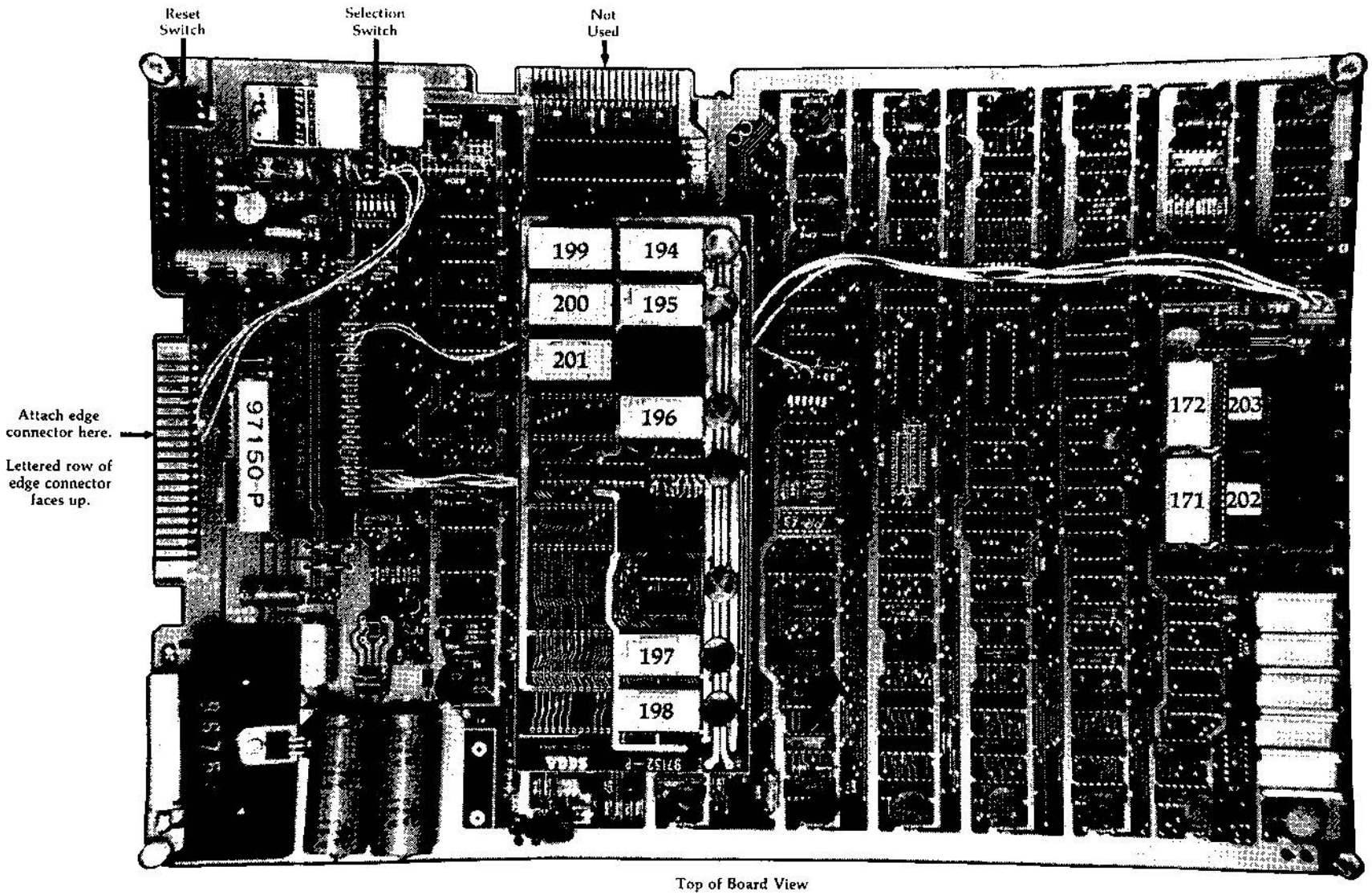

Top of Board View

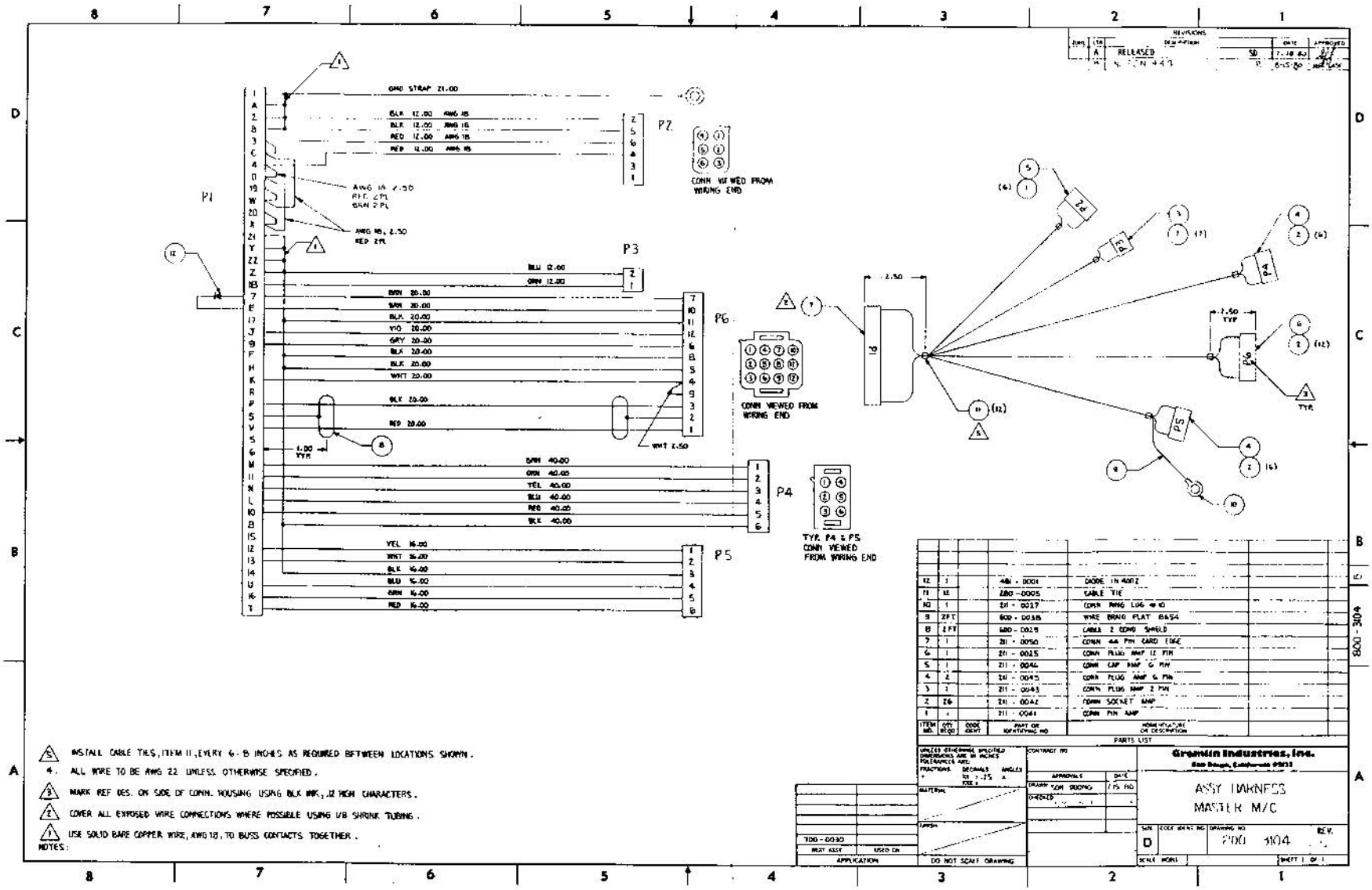

ITEM NO.	QTY REQD	CODE IDENT	PART OR IDENTIFYING NO	NOMENCLATURE OR DESCRIPTION
12	1		481 - 0001	DIODE IN 4002
11	12		280 - 0005	CABLE TIE
10	1		211 - 0027	CONN RING LUG #10
9	2 FT		600 - 0038	WIRE BRAID FLAT BA54
8	2 FT		600 - 0029	CABLE 2 COND SHIELD
7	1		211 - 0050	CONN 44 PIN CARD EDGE
6	1		211 - 0025	CONN PLUG AMP 12 PIN
5	1		211 - 0044	CONN CAP AMP 6 PIN
4	2		211 - 0045	CONN PLUG AMP 6 PIN
3	1		211 - 0043	CONN PLUG AMP 2 PIN
2	26		211 - 0042	CONN SOCKET AMP
1	1		211 - 0041	CONN PIN AMP

PARTS LIST

REVISIONS				
ZONE	LTR	DESCRIPTION	DATE	APPROVED
	A	RELEASED	SD 7-18-80	
			8-15-80	

5. INSTALL CABLE TIES, ITEM 11, EVERY 6 - 8 INCHES AS REQUIRED BETWEEN LOCATIONS SHOWN.
4. ALL WIRE TO BE AWG 22 UNLESS OTHERWISE SPECIFIED.
3. MARK REF DES. ON SIDE OF CONN. HOUSING USING BLK INK, .12 HIGH CHARACTERS.
2. COVER ALL EXPOSED WIRE CONNECTIONS WHERE POSSIBLE USING 1/8 SHRINK TUBING.
1. USE SOLID BARE COPPER WIRE, AWG 18, TO BUSS CONTACTS TOGETHER.

NOTES:

UNLESS OTHERWISE SPECIFIED DIMENSIONS ARE IN INCHES TOLERANCES ARE:
FRACTIONS ± DECIMALS .XX ± .25 .XXX ± ANGLES ±

MATERIAL

FINISH

DO NOT SCALE DRAWING

CONTRACT NO

APPROVALS | DATE
DRAWN SON SUONG | 7-15-80
CHECKED

Gremlin Industries, Inc.
San Diego, California 92123

ASSY HARNESS
MASTER M/C

SIZE D | CODE IDENT NO | DRAWING NO 200 3104 | REV.

SCALE NONE | SHEET 1 OF 1

700-0030
NEXT ASSY | USED ON
APPLICATION

800-3104

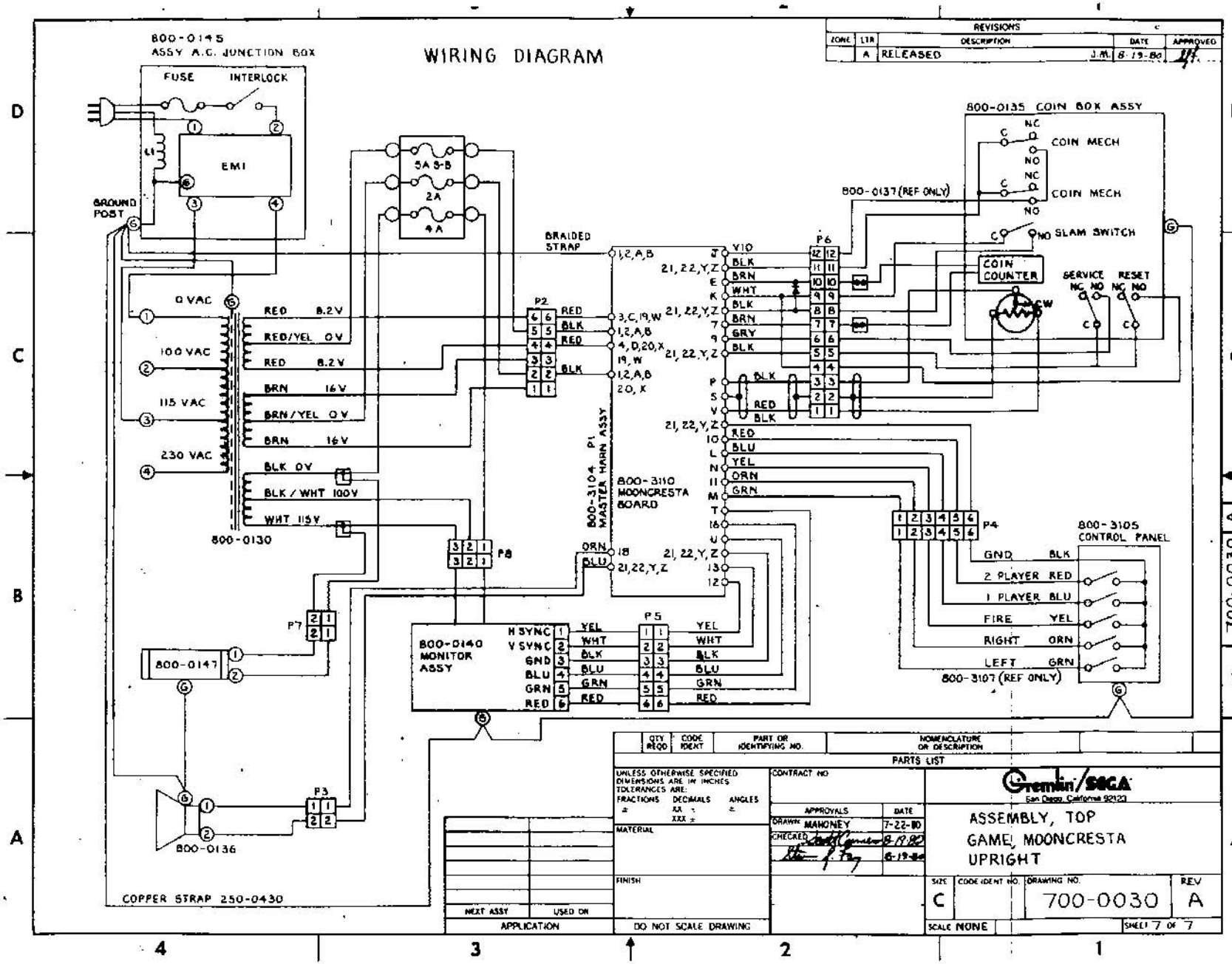
WIRING DIAGRAM
800-0145
ASSY A.C. JUNCTION BOX
FUSE
INTERLOCK
EMI
GROUND POST
5A 3-B
2A
4A
BRAIDED STRAP
0 VAC
100 VAC
115 VAC
230 VAC
RED 8.2V
RED/YEL 0V
RED 8.2V
BRN 16V
BRN/YEL 0V
BRN 16V
BLK 0V
BLK / WHT 100V
WHT 115V
800-0130
P2
P8
P7
P3
800-0147
800-0136
COPPER STRAP 250-0430
800-3104 P1 MASTER HARN ASSY
800-3110 MOONCRESTA BOARD
800-0140 MONITOR ASSY
H SYNC
V SYNC
GND
BLU
GRN
RED
P5
P6
800-0135 COIN BOX ASSY
COIN MECH
COIN MECH
800-0137(REF ONLY)
SLAM SWITCH
COIN COUNTER
SERVICE
RESET
P4
800-3105 CONTROL PANEL
GND BLK
2 PLAYER RED
1 PLAYER BLU
FIRE YEL
RIGHT ORN
LEFT GRN
800-3107 (REF ONLY)
REVISIONS
ZONE LTR DESCRIPTION DATE APPROVED
A RELEASED J.M. 8-19-80
PARTS LIST
QTY REQD CODE IDENT PART OR IDENTIFYING NO. NOMENCLATURE OR DESCRIPTION
UNLESS OTHERWISE SPECIFIED DIMENSIONS ARE IN INCHES
TOLERANCES ARE:
FRACTIONS DECIMALS ANGLES
± .XX ± ±
.XXX ±
MATERIAL
FINISH
NEXT ASSY USED ON
APPLICATION
DO NOT SCALE DRAWING
CONTRACT NO
APPROVALS DATE
DRAWN MAHONEY 7-22-80
CHECKED 8-19-80
6-19-80
Gremlin/SEGA
San Diego, California 92123
ASSEMBLY, TOP
GAME, MOONCRESTA
UPRIGHT
SIZE C
CODE IDENT NO.
DRAWING NO. 700-0030
REV A
SCALE NONE
SHEET 7 OF 7
700-0030 A

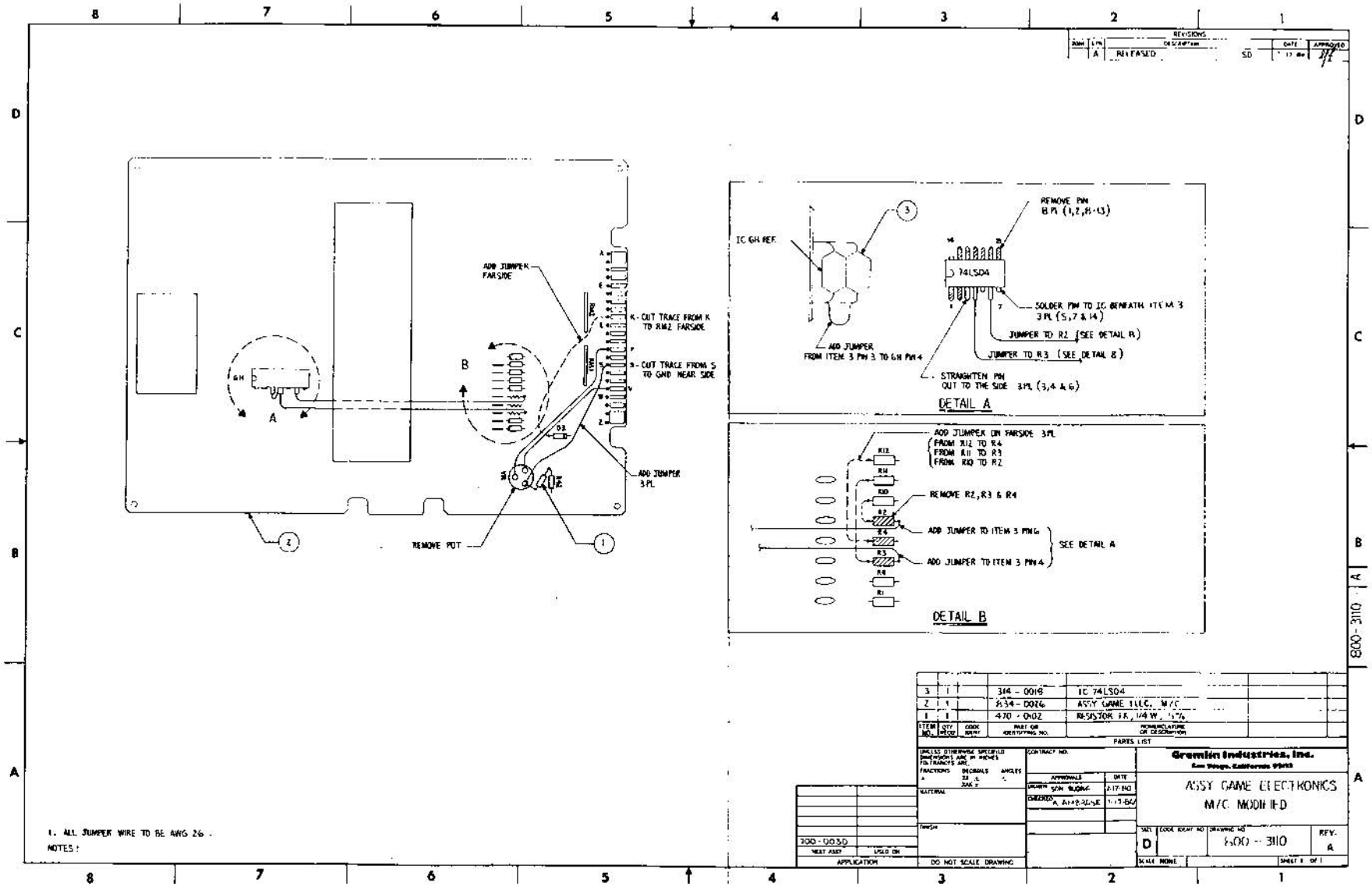

REVISIONS
A RELEASED SD
ADD JUMPER FARSIDE
K - CUT TRACE FROM K TO RM2 FARSIDE
S - CUT TRACE FROM S TO GND NEAR SIDE
ADD JUMPER 3PL
REMOVE POT
IC GH REF
REMOVE PIN 8 PL (1,2,8-13)
74LS04
SOLDER PIN TO IC BENEATH ITEM 3 3PL (5,7 & 14)
JUMPER TO R2 (SEE DETAIL B)
JUMPER TO R3 (SEE DETAIL B)
ADD JUMPER FROM ITEM 3 PIN 3 TO GH PIN 4
STRAIGHTEN PIN OUT TO THE SIDE 3PL (3,4 & 6)
DETAIL A
ADD JUMPER ON FARSIDE 3PL
FROM R12 TO R4
FROM R11 TO R3
FROM R10 TO R2
REMOVE R2, R3 & R4
ADD JUMPER TO ITEM 3 PIN 6
ADD JUMPER TO ITEM 3 PIN 4
SEE DETAIL A
DETAIL B
3 1 314 - 0018 IC 74LS04
2 1 834 - 0026 ASSY GAME ELEC. M/C
1 1 470 - 0102 RESISTOR FR, 1/4 W, 5%
ITEM NO. QTY REQD CODE IDENT PART OR IDENTIFYING NO. NOMENCLATURE OR DESCRIPTION
PARTS LIST
UNLESS OTHERWISE SPECIFIED DIMENSIONS ARE IN INCHES TOLERANCES ARE
FRACTIONS DECIMALS ANGLES
MATERIAL
FINISH
CONTRACT NO.
APPROVALS DATE
DRAWN SON BUONG 2-17-80
CHECKED A. AMBROSE 1-17-80
Gremlin Industries, Inc.
San Diego, California 92123
ASSY GAME ELECTRONICS
M/C MODIFIED
SIZE D CODE IDENT NO DRAWING NO 800 - 3110 REV. A
SCALE NONE SHEET 1 OF 1
800-3110 A
200-0030
NEXT ASSY USED ON
APPLICATION
DO NOT SCALE DRAWING
1. ALL JUMPER WIRE TO BE AWG 26.
NOTES:

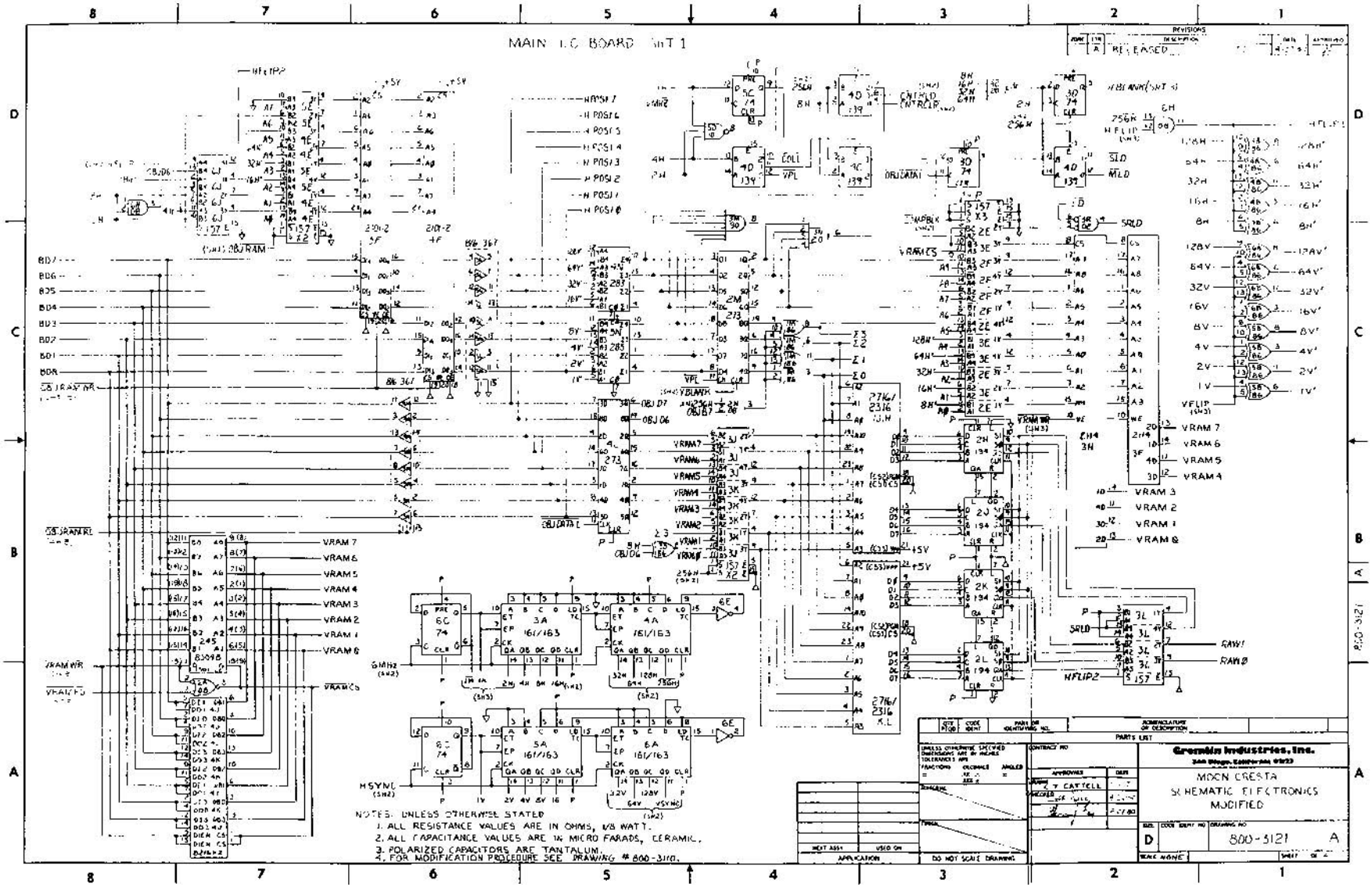
MAIN I.C. BOARD SHT 1
NOTES: UNLESS OTHERWISE STATED
1. ALL RESISTANCE VALUES ARE IN OHMS, 1/8 WATT.
2. ALL CAPACITANCE VALUES ARE IN MICRO FARADS, CERAMIC.
3. POLARIZED CAPACITORS ARE TANTALUM.
4. FOR MODIFICATION PROCEDURE SEE DRAWING # 800-3110.
Gremlin Industries, Inc.
MOON CRESTA
SCHEMATIC ELECTRONICS
MODIFIED
800-3121
A
D
PARTS LIST
DO NOT SCALE DRAWING
REVISIONS
RELEASED

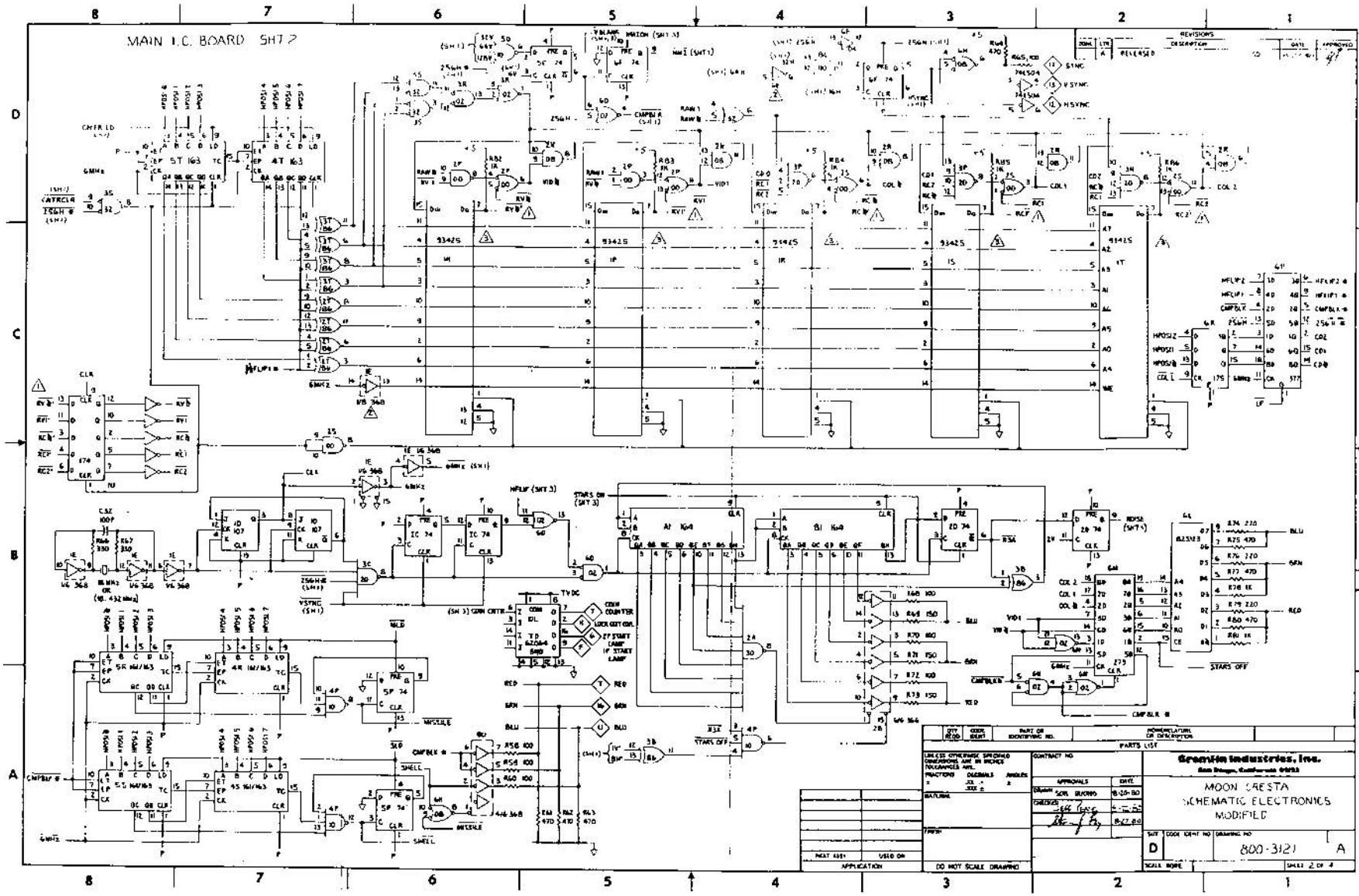
MAIN P.C. BOARD SHT 2
REVISIONS
DESCRIPTION
RELEASED
SYNC
VSYNC
HSYNC
PARTS LIST
Gremlin Industries, Inc.
MOON CRESTA
SCHEMATIC ELECTRONICS
MODIFIED
800-3121
A
DO NOT SCALE DRAWING
SHEET 2 OF 4

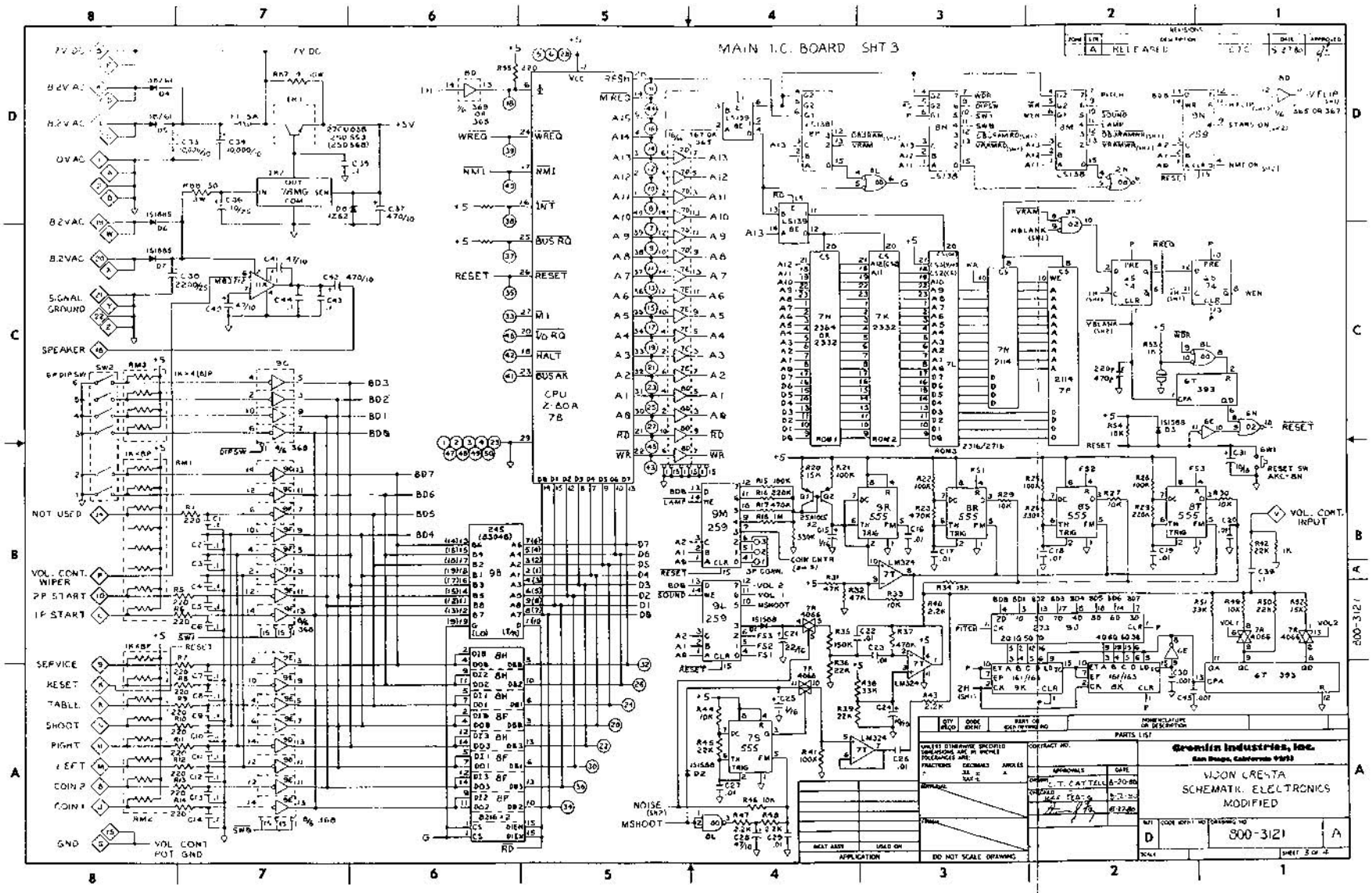
MAIN I.C. BOARD SHT 3
CPU Z-80A 7B
Gremlin Industries, Inc.
MOON CRESTA
SCHEMATIC ELECTRONICS
MODIFIED
800-3121
A
SHEET 3 OF 4
SIGNAL GROUND
SPEAKER
NOT USED
VOL. CONT. WIPER
2P START
1P START
SERVICE
RESET
TABLE
SHOOT
RIGHT
LEFT
COIN 2
COIN 1
GND
VOL CONT POT GND
VOL. CONT. INPUT
NOISE (SH2)
MSHOOT
RESET SW ACT-ON

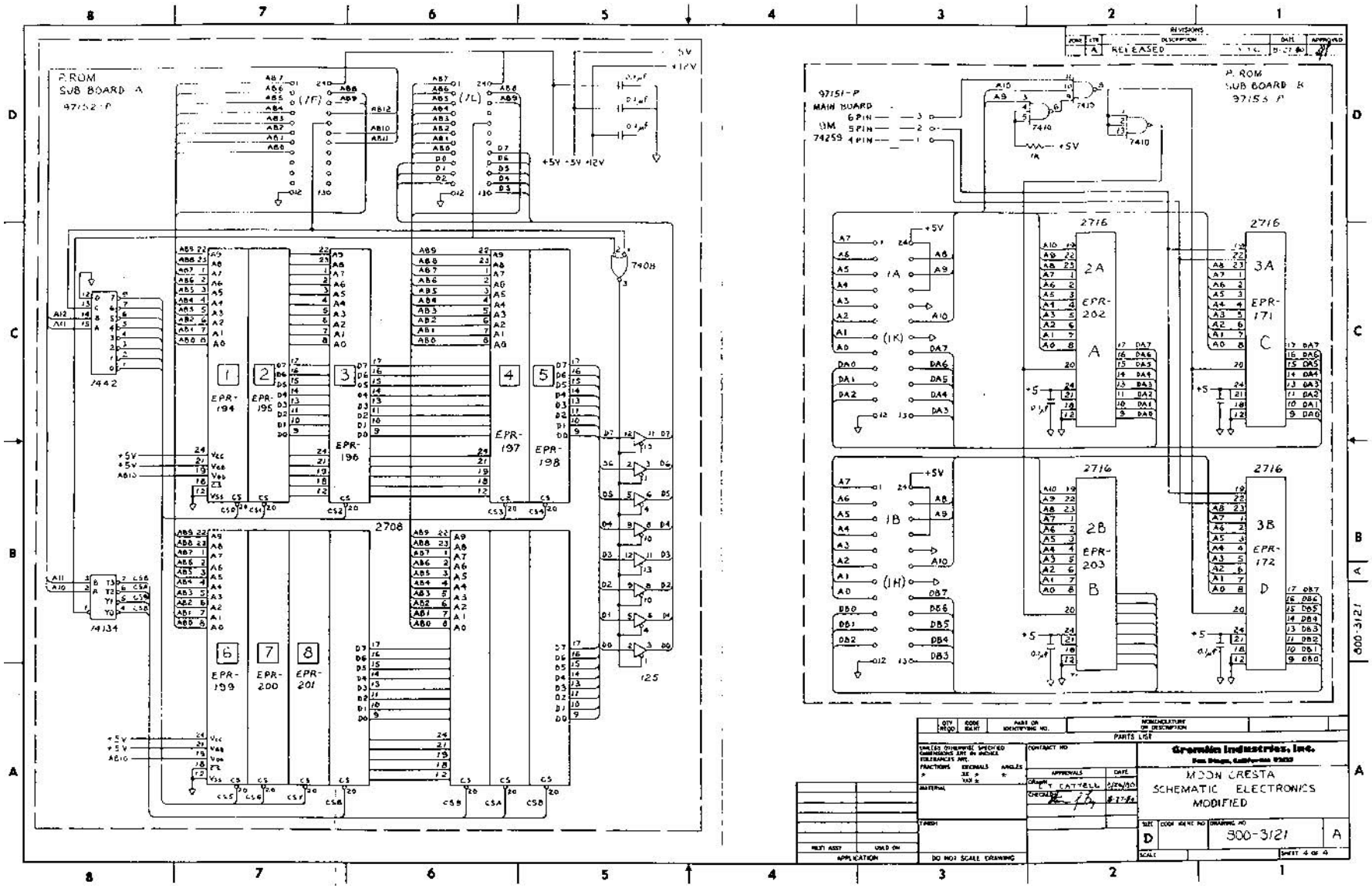
P. ROM
SUB BOARD A
97152-P
P. ROM
SUB BOARD B
97153-P
97151-P
MAIN BOARD
6 PIN
5 PIN
4 PIN
EPR-194
EPR-195
EPR-196
EPR-197
EPR-198
EPR-199
EPR-200
EPR-201
2708
2716
EPR-202
EPR-171
EPR-203
EPR-172
7408
7410
7442
74134
125
+5V
+12V
REVISIONS
RELEASED
PARTS LIST
Gremlin Industries, Inc.
MOON CRESTA
SCHEMATIC ELECTRONICS
MODIFIED
DO NOT SCALE DRAWING
SIZE
D
DRAWING NO
800-3121
A
SHEET 4 OF 4
APPLICATION
800-3121