OWNER'S MANUAL

Manual Part No. 420-0556

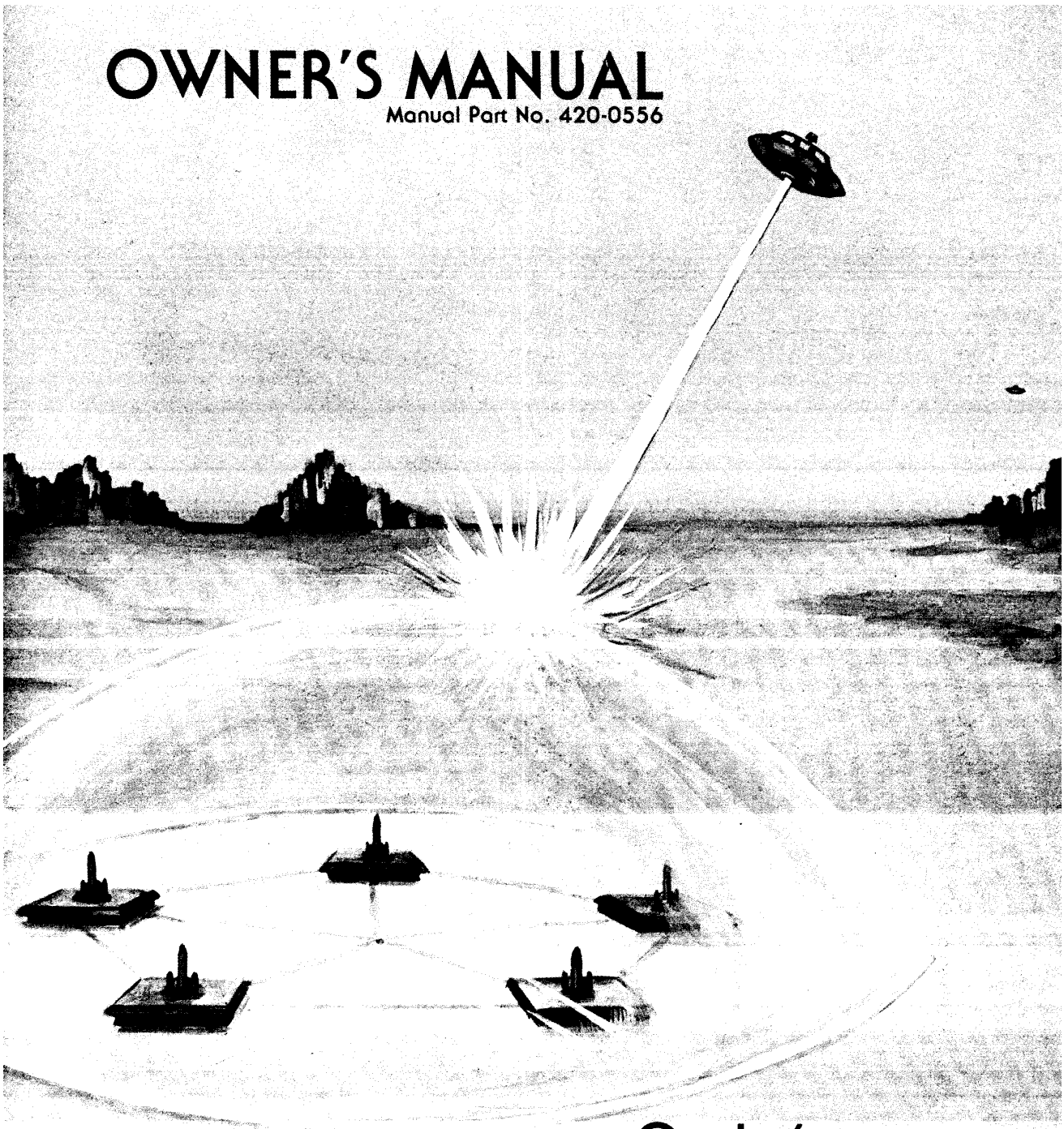

Gremlin/SEGA

SPACE TACTICS™

Gremlin/SEGA

SPACE TACTICS™

Owner's Manual

GREMLIN INDUSTRIES, INC.
8401 Aero Drive
San Diego, CA 92123
(714) 277-8700
TLX:910-335-1621

SEGA ENTERPRISES, LTD.
No. 2-12 Haneda 1-Chome
Ohta-ku, Tokyo, Japan 144
(03) 742-7312
TLX: SegaStar 22357

SPACE TACTICS OWNER'S MANUAL
Copyright © 1980 by GREMLIN®/SEGA®, All Rights Reserved

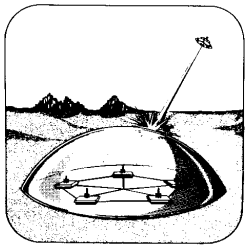

table of contents

Introduction ..... *iii*
Game Concept *1*
Game Specifications *1*
A. Shipping Bracket Removal *2*
B. Game Inspection *2*
C. Connecting Game Halves *3*
D. Game Power-On *3*
Theory of Operation *4*
Logic Board Diagram *6*
Maintenance Procedures *7*
1. General Service Tips *8*
2. Power Supply *9*
3. Sound Board *10*
4. Power Amplifier *10*
5. Logic Board *12*
Game Adjustments *13*
1. Mirror Motor *14*
2. Monitor Motor *15*
3. Alignment of Mirror and Motor During Self-Test *16*
4. Steering Handle *17*
5. Monitor Removal *18*
6. Miscellaneous Adjustments *19*
Parts Catalog *23*
1. Complete Assembly *24*
2. Recommended Spare Parts *36*
Schematics *39*

introduction—how to use this manual

The following manual is designed to instruct you in the trouble-free operation of your new Space Tactics game. Please take the time to read it through carefully **before** using your game. This manual assumes the maintenance technician possesses a general knowledge of solid state circuitry, microprocessor and digital integrated circuitry, and TV monitor concepts. Any individual **not** knowledgeable in these areas **should not** attempt repair of the electronic portion of the game.

The manual is organized in two main sections—electronic assemblies and electro-mechanical assemblies—which contain detailed service and parts information. After reading the manual through first, you will then be familiar with the proper assembly section to refer to if a problem should occur. If you have any questions that are not answered in this manual, call GREMLIN/SEGA Customer Service, (714) 277-8700.

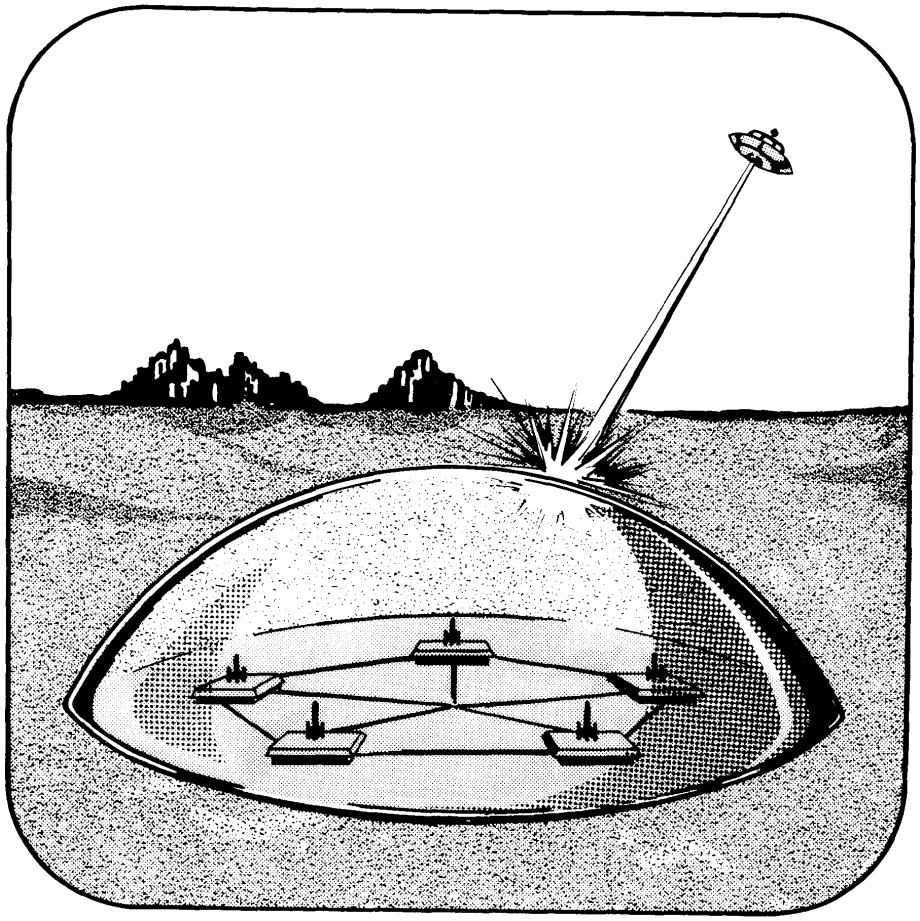

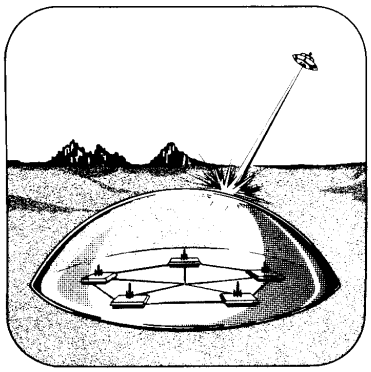

game concept

Space Tactics is the newest video game from GREMLIN/SEGA. It is a sitdown-style game, surrounding the player with the game action. The object of the game is to destroy the attacking space ships one by one in order to defend the five player bases at the bottom of the screen. At the beginning of each game, the player's bases are armed with one missile each which destroys the bombs dropped by the enemy ships. These are controlled by the five red switches on the game front panel.

By moving the steering handle, the player aims his laser beam at the enemy ships. His aim must be exact to destroy the ships. The handle allows the player to aim at all parts of the screen. At the game's beginning, the player receives 4 or 6 base-barrier defenses, which he must use carefully throughout the game. The base-barrier is a yellow arc that runs over the player's bases and prevents enemy bombs from reaching the bases; it is activated with the yellow front-panel switch. But, a bomb that hits the barrier will explode and make a hole in the defense.

The player must destroy all enemy ships in each round to advance to the next round. Each of the 3 kinds of enemy ships is worth a different point value, depending on the round. At the end of the first round, one UFO appears and must be hit to gain a bonus point value. The sooner this ship is hit, the higher will be the points awarded. At the end of the second round, 2 UFOs appear. Play continues until all the bases are destroyed by the enemy; when this occurs, the game ends.

Options selection for Space Tactics allows you to select the number of coins and credits for each coin mechanism, number of barriers, bonus barriers, (1 or 2 extra each time a player destroys all invaders and the UFO), player initials entry, advertising sound on/off and extended play. The extended play feature occurs only if 2 or more credits are on the game. Refer to the Options Selection section under Miscellaneous Adjustments in this manual for instructions. Also, at the end of every game, the screen displays the top 5 high scores, and allows entry of a player's initials if he is one of the high scorers.

game specifications

Power	90-120VAC, 175 watts 100-240VAC, 175 watts
Dimensions:	31W X 69 inchesD (77cmW X 171cmD)
	Height 63 inches (157cm)

game set-up and inspection

a. Shipping Bracket Removal

After the game halves are out of their cartons, you must remove the shipping brackets and bolts before operating the game. Refer to the drawing to locate these brackets and bolts. The only tools required are a Phillips-head screwdriver and a cresent wrench. Remove the brackets carefully, so that the FRAGILE GLASS MIRROR does not break. Loosen and remove the 2 shipping bolts located at the bottom of the monitor. When moving the game at any time, we strongly recommend that these brackets and bolts be put back, as a precaution against shipping vibrations.

b. Game Inspections

After all shipping brackets and material have been removed, inspect the game against the following check-points: (DO NOT TURN THE GAME ON YET!)

Check:
- ☐Cabinet not damaged.
- ☐Glass mirror not broken or cracked.
- ☐No wires loose from plastic connectors.
- ☐Logic and sound boards seated properly.
- ☐Monitor mounted securely.
- ☐Monitor boards seated properly.
- ☐Connectors are attached properly.

These are problems that could occur during shipment. Be sure to check them **before** turning on the game. Report any serious problems to GREMLIN/SEGA Customer Service, or your distributor.

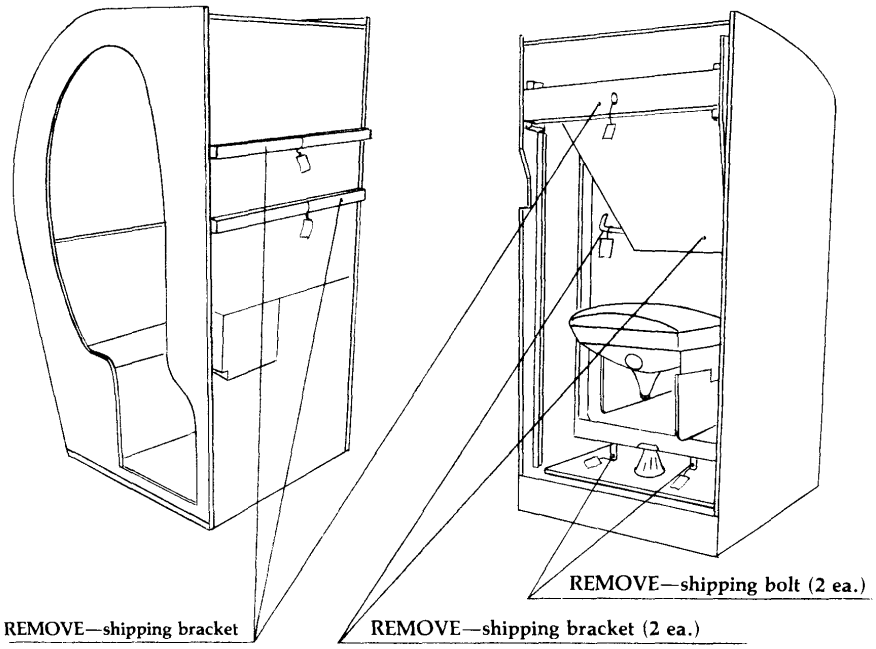

c. Connecting Game Halves

Position the front and back halves together, leaving about 6 inches (15 cm) of space between them. Now, insert all plastic connectors from each half. All the leads and connectors are color-coded, so there will not be a mistake in making the connections. Be sure to insert the male/female connectors firmly. When all leads are attached, tuck the wiring inside the rear half of the game to be certain that no wires hang out when the cabinet halves are brought together. Now, push the game halves together and insert the enclosed Allen-head bolts (located in the cash box) into the following positions:

1 bolt on the right side of the game.
1 bolt on the left side of the game.
3 bolts on the top of the game.
3 bolts on the bottom, below the steering handle.
(8 bolts used, total).

It is suggested the game halves be joined on a smooth floor surface for easier maneuvering. Adjust the cabinet leg levellers under the game, as needed for your location. Two handles are provided on the rear of the front half for moving the game.

d. Game Power—On

Now you are ready to turn on your Space Tactics game. Plug in the game and turn on the power switch located on the rear side of the game. The following sequence should occur:

1. The monitor and mirror assemblies will move slightly to center themselves before the game starts. This occurs every time the game is turned on. If the monitor or mirror do not move, it may only mean they were already centered.
2. The two ultraviolet fluorescent lights will come on.

(Do not look directly at these lamps—ultraviolet light can harm the eyes! Also do not expose the logic board to the lamps—ultraviolet light erases Eproms!)

3. If everything is normal, the monitor, at power on, displays random information. A few seconds later, this clears and the game goes into the advertising sequence, first displaying:

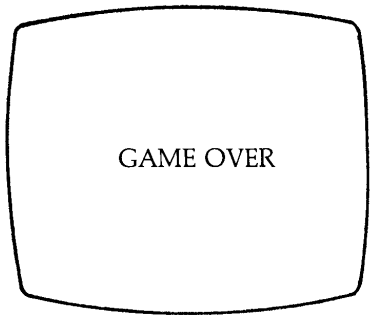

If there is a mechanical problem; the screen displays:

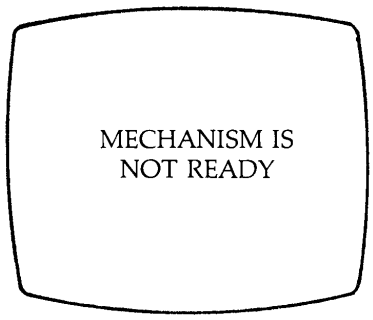

Consult the Maintenance section of this manual for further instructions.

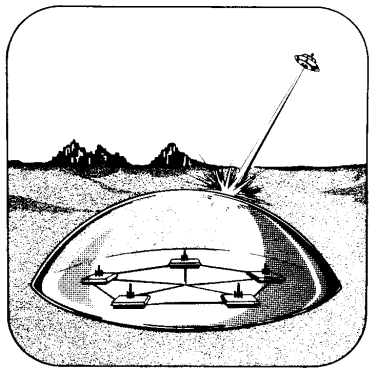

game theory of operation

Space Tactics is a unique combination of video-game and electro-mechanical circuitry. As a video game, it possesses the essential elements of any video computer:

1. A microprocessor
2. Memory circuits
3. Clock and video timing circuitry
4. Input ports
5. Output ports
6. Power circuits
7. Video and character generation circuitry

But, what makes Space Tactics a special kind of video game is its electro-mechanical system controlled by the computer. More about that system later.

First, let's look briefly at each of the essential elements above and where they are located in the game. (Refer to the Logic Board Block Diagram for reference.)

1. Microprocessor: (Page B of Schematics)
The microprocessor used in Space Tactics is an 8080A. It is IC 138 on the logic board, and is the heart of the computer. It controls the movement of data and instructions to and from memory and the outside world.

2. Memory Circuits: (Pages C, D, and E of Schematics)
Basically, there are two types of memory devices: 2716 Eproms (8), and 4027 RAMS (32). The Eproms hold the program instructions for the microprocesor; they also contain character information. The RAMS form the video memory and they are divided into 4 Pages of 8 RAM ICs each. (A Page is a section of memory designed to hold certain video information.) The Pages in Space Tactics memory are labelled "B", "D", "E" and "F".

3. Clock and Video Timing Circuitry: (Page G of Schematics)
The Master Clock circuitry consists of a crystal and IC 143. The clock signal generated by this circuit not only drives the microprocessor, but also the video timing circuits 123, 118, 116, 117, 121, and 122.

4. Input Ports: (Pages F, H and I of Schematics)
Input ports allow the computer to sense the player's actions on input devices. Refer to the Maintenance section for a list of these parts and ICs. Note that the photo-sensing units used in the game are considered input devices, also.

5. Output Ports: (Pages F, H and I of Schematics)
Output ports allow the computer to respond to the player's actions. The Maintenance section lists the output ports and ICs. Note also the addition of 2 output devices not commonly found in video games—the 2 motors.

6. Power Circuits: (Page E of Schematics)
Voltage requirements for the game's logic board are +5 VDC, -5, +12, +6.8 VDC and +8 VDC. The last two voltages provide power for the 75468 transistor array ICs; 6 VDC also powers the coin counter and coin rejects coils.

7. Video and Character Generation: (Pages C, D and F of Schematics, also see block diagram of logic board)
The circuits that produce the color video patterns on the screen consist of not only the video RAM (4 Pages), but also the following:

a) Address Multiplexers
b) Video Memory Controller
c) Character Generator
d) Color Prom (RGB outputs)

LOGIC BOARD DIAGRAM

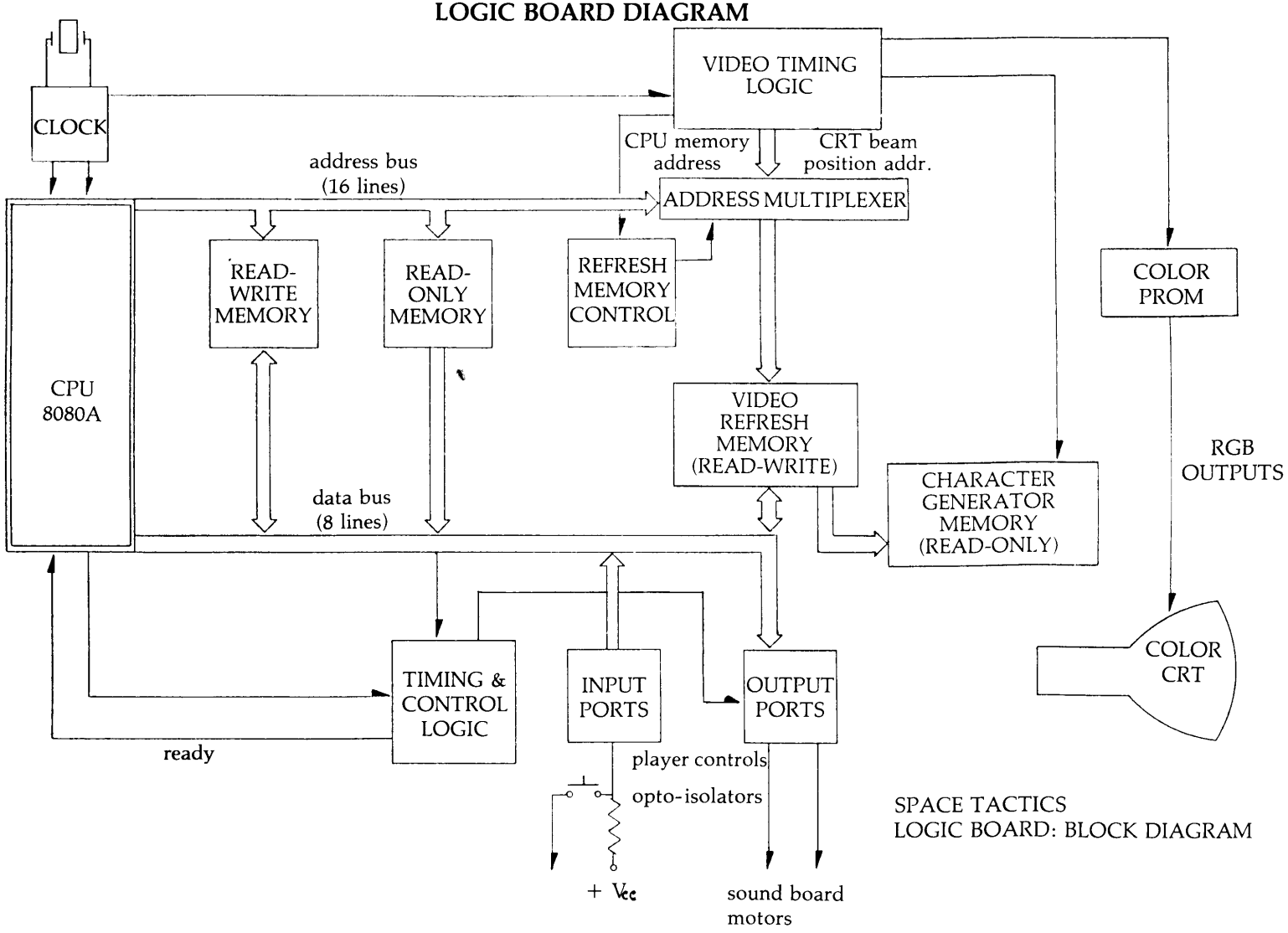

SPACE TACTICS
LOGIC BOARD: BLOCK DIAGRAM

The address multiplexers are 74LS153 ICs located (on the schematic) to the left of each of the four RAM pages. They allow the computer to address the RAMs at one time, and, at another, allow video timing to address the RAMs. This process of switching between the computer and the video timing updates, or refreshes, the information in the RAMs. The action occurs so fast that the video data changes on the screen smoothly and rapidly. The Video Memory Controllor is part of the video timing circuitry that ensures the switching process does not occur at the same time. Character Generation is produced from a portion of Eprom that contains the information for the various characters in the game. The color Prom, IC 86, generates the pulses, on command from video memory, that produces the Red, Green, Blue (RGB) signals for the color monitor.

Now that we have identified the essential elements of the Space Tactics computer board, let's see how the whole system works together.

Player responses on the input devices, and the computer responses on the output devices are all monitored and controlled by the game's computer. This applies to the electro-mechanical system as well, because it contains input devices (the opto-isolators) and output devices (the motors) which the computer senses and reacts to. So, think of the electro-mechanical assemblies in the game as different kinds of input and output devices, like sound boards and monitors (output devices) and coin and player switches (input devices)—that is what they are. The electro-mechanical system, then, works in the game as follows: One motor controls the movement of the mirror assembly up and down, and the other motor moves the monitor left and right. These motions are activated by the steering handle. For example, when the handle is turned to the left, the computer senses this switch is closed and causes the motor circuit to turn on the motor. You will see there are four motor circuits on the logic board; two control the directions, clockwise or counter-clockwise, of the mirror motor, and two control the directions of the monitor motor. The game computer senses the direction and position of both the mirror and monitor assemblies. It must do this continually, or the game would not respond accurately to the player's commands. So, two opto-isolators sense the up/down limit of the mirror, and two micro-switches sense the left/right limit of the CRT. When one of them is activated, it tells the computer that the CRT motor, for example, cannot move left anymore. As reference points for the computer, one opto-isolator informs the computer of the mirror's center position (halfway mark) and one tells of the CRT's center position. This is why both motors activate on game power-up: They simply center the mirror and monitor for the next game.

Finally, two notched sensor discs on both motor shafts rotate between opto-isolators to generate a string of pulses. The computer counts the pulses and keeps track of the positions of both the mirror and monitor. This occurs so that the computer knows, for example, where and when the player laser shot hits the screen. Now, you can see how the mechanical system in the game works: It consists of input and output devices not commonly found in video games, and, as such, they are all under game-computer control.

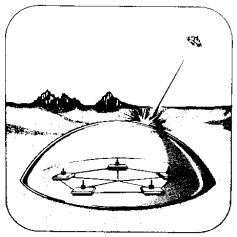

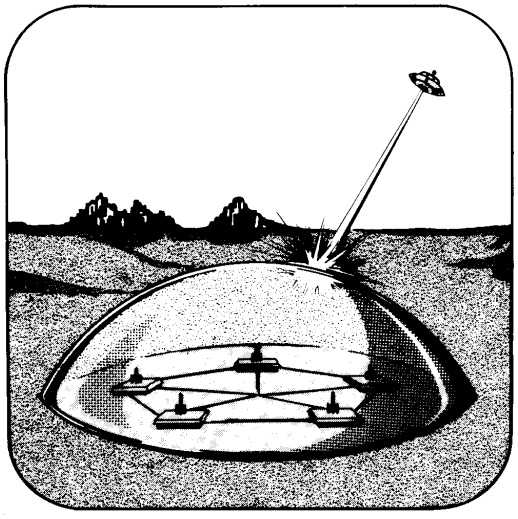

maintenance procedures

1. General Service Tips

If, when the game is first turned on, the screen displays:

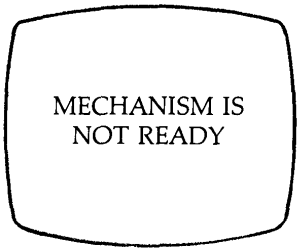

and you have done all the steps in the Game Set-Up section of the manual, open the service door on the side of the game's rear half, and inspect the monitor center sensor (see figure 2). Make sure its wires are connected and that the black opto-isolator is not defective. Re-solder any loose wires, or replace the bad sensor. If this fails to start the game, make the **same checks** on the mirror sensors, located on the top of the mirror motor assembly (see figure 1.) (The game halves need to be separated in order to make this inspection). If these check good, turn off the game and manually turn the monitor and mirror to their center positions. Now, re-power the game: If "MECHANISM IS NOT READY" comes on the screen again, proceed to check the two motors. Make sure they are not jammed and are connected properly. If this fails to solve the problem, suspect a problem on the logic board. Refer to the logic board maintenance section, following.

2. Power Supply Repairs (Refer to game block diagram (page A) and schematics (page E)

The power supply design is straightforward enough to locate any problem quickly. Three IC voltage regulators supply the DC voltages; 2 ICs (IC1 and IC2) supply +12 volts, one (IC3) supplies -5 volts. The switching regulator unit supplies +5 volts at 6 amps. In addition, +17 volts is taken from the rectifier D4, +8 and +6 (unregulated) volts from the last two diode rectifier circuits. If a voltage problem occurs, check the output at the power supply for the proper voltage. If the voltage is still not present, disconnect the supply lead at the power supply and measure the voltage again. If the voltage reappears, you should suspect a problem (probably a short) on one of the IC boards. If the voltage does not show up, suspect the diode bridge or IC voltage regulator.

3. Sound Board Repairs (Refer to sound board schematics and game block diagram)

When one or more sounds is missing, it is best to isolate the particular defective sound circuit on the sound board. Refer to the block diagram for the list of sound types and pin connections to the sound board. Activate the problem sound circuit and, on the sound board, look for any transistors that do not switch states when activated, or check ICs that should change states, or should generate clock signals. Also, check both inputs and outputs to IC amplifiers for the presence of signals. Refer to the diagram below to adjust the sound board controls.

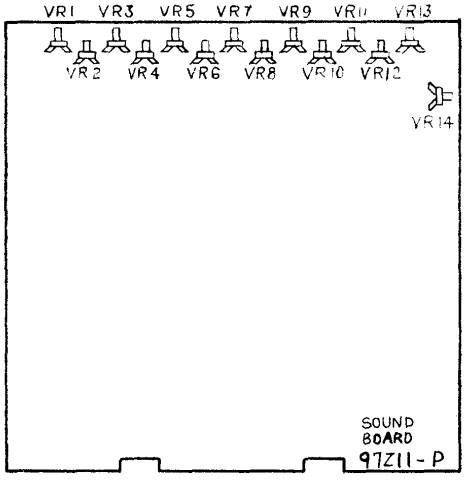

VR 1. Explosion Lower Sound Volume
VR 2. Not used
VR 3. U.F.O. Hit Sound Volume
VR 4. Explosion Upper Sound Volume
VR 5. Bomb Sound Volume
VR 6. Player Shot Sound Volume

VR 7. Invader Sound Volume
VR 8. Warning Sound Volume
VR 9. Invader Hit Sound Volume
VR 10. Rocket Sound Volume
VR 11. U.F.O. Sound Volume
VR 12. Character Sound Volume
VR 13. BBD (Echo) Sound Volume
VR 14. BBD Bias Volume

4. Power Amplifier Repairs (See diagram below)

There are two power amplifier boards in the game, one for the upper speaker and one for the lower. First, isolate which of the two amplifiers is defective by turning down the volume of one, while keeping the volume of the other high. Reverse this procedure to isolate the defective board. Check for the proper voltage level on the board (+17VDC) and for ground potential. If these are present, trace an audio signal through the amplifier circuit and verify whether it is present on the output. If not, the IC is probably defective, or one of the coupling capacitors is bad.

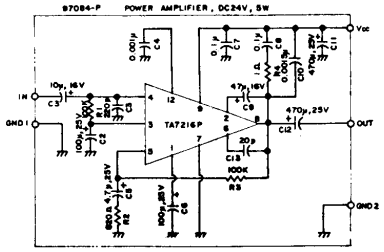

5. Logic Board Repairs (Refer to schematics, page B through I)

a) Built-in Self-Test Feature:

The Space Tactics logic board has a built-in self-test program which is activated by flipping the switch labeled "SELF-TEST". This switch is located on the power supply board in the rear of the game, and inside the coin entry door, at the top. The self-test checks for a bad RAM in one of the four RAM Pages. (Each Page contains 8 RAM ICs). It also checks for any defective switch or display on the game front panel. To run the test, **turn off the game, then** turn the self-test switch on, **re-power the game,** and observe the following screen displays:

i) The screen displays, in this order:
   a red screen
   a yellow screen
   a green screen
   a red screen

ii) Then, 30 seconds later, a small yellow "X" appears inside a red border. The laser beams begin to fire. This allows you to check for proper operation of the laser beams. The "hit" LED (red) and the yellow "X" should line up exactly, otherwise the mirror or monitor assembly needs adjustment. (see Game Adjustments)

iii) The switches on the front panel light up. Each of the LED segments in the BAR displays light up, one at a time. Watch for any burned-out LEDs or lamps at this time. Also, the score displays count 0 through 9, allowing you to check them for proper operation. Next, activate each switch and its light should go out, showing that the switch is good.

iv) If a RAM is bad, for example, in the "D" Page, first the screen displays:

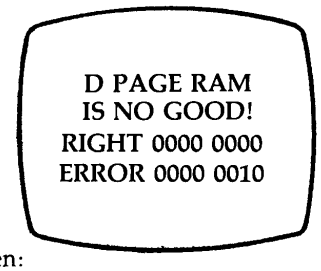

Then:

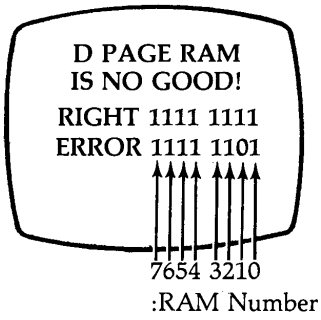

RAM PAGE (8 RAMs each)	RAM# 0	1	2	3	4	5	6	7
B	IC82	83	84	85	74	75	76	77
D	60	61	62	63	52	53	54	55
E	37	38	39	40	30	31	32	33
F	17	18	19	20	10	11	12	13

In the first readout, a "1" appears in the ERROR row, indicating a bad RAM. The second display occurs only to verify the first display, by inverting the first display. So, a "0" appears here, showing the same bad RAM. The RAMs in each Page are numbered 0 through 7, with the 0 RAM at the far right, as shown above. Refer to the chart above to locate the correct RAM IC on the logic board:

So, our example shows RAM #61 is defective. Change the defective RAM and run the test again to verify the replacement. The RAMs are grouped into their respective Pages on the logic board. **NOTE:** If there is a bad RAM in the "B Page", the display will not clearly show this, because "B Page" is the memory devoted to displaying words and letters. Isolate the bad "B" RAM further with an oscilloscope by looking for a floating, pulled-high or missing signal on the suspected RAM output, pin 14. **IMPORTANT: To return to the game mode, you must first turn off the game power, turn off the test switch, then re-power the game. Failing to turn off the game before deactivating the test switch, could cause an erratic display.**

b) Defective Screen Displays:

As was mentioned, each Page of RAMs performs certain display functions. They are:

Page B Displays:
- Character (words/letters) display
- Player bases
- Barrier (yellow arc above bases)
- Bomb (from enemy invaders)

Page D Displays:
- The enemy invaders that appear in the back of the screen playfield

Page E Displays:
- The invaders that appear in the middle of the playfield

Page F Displays:
- The closest invaders, when they enlarge
- The UFO saucer

So, if a problem occurs where some or all the above pictures are defective, suspect the RAMs or multiplexers in the corresponding Page.

c) Defective Player Controls: (Refer to input ports schematics)

Suspect the ICs listed below as bad if the corresponding input switch fails to operate, but the switch is good.

INPUT PORT IC # (on logic board)	INPUT SWITCH
IC 1	Fire Switch
1, 7, 80, 87, 35	Move Right (Steering Handle)
1, 7, 72, 66, 35	Move Left (Steering Handle)
1	Move Up (Steering Handle)
1	Move Down (Steering Handle)
1	CRT: Right Limit Switch
1	CRT: Left Limit Switch
34	CRT: Center Opto-isolator
34	Mirror: Right Limit Opto-isolator
34	Mirror: Left Limit Opto-isolator
34	Mirror: Center Limit Opto-isolator
14, 22	(2) CRT Clock Pulse (CP) Opto-isolators

INPUT PORT IC# (on logic board)	INPUT SWITCH
14, 22	(2) Mirror Clock Pulse Opto-isolators
71	Dip Switch #1
78	Dip Switch #2
78	Steering Handle Switches for Entering Player Initials Only
48	Coin Switches 1 and 2
48	Service Switch
48	Self-Test Switch
41	(5) Base Switches
41	Start Switch
41	Barrier Switch

Be sure to verify a suspected opto-isolator as bad before replacing its input port IC. Do this by holding a logic probe, or oscilloscope probe to the output of the device. Then, slip a dark-colored piece of paper between the opto-isolator and observe a voltage change at the output. If no change occurs, the opto-isolator is probably bad.

d) Defective Output Control: (Refer to output port schematics)

Refer to the list below to locate a defective output IC (or other part) for the corresponding output device.

OUTPUT PORT IC # (on logic board)	OUTPUT DEVICE
IC2, XSTR TR22, IC159, Photo-Coupler PC4, DIAC 4, TRIAC 4	CRT Motor, Turn Right
IC2, TR23, IC159, PC3, DIAC 3, TRIAC 3	CRT Motor, Turn Left
IC7, IC8, TR20, IC159, PC2, DIAC 2, TRIAC 2	Mirror Motor, Down
IC8, TR21, IC159, PC1, DIAC 1 TRIAC 1	Mirror Motor, Up
ICs 95, 96	Lights in Barrier, Start and Base Switches
ICs 139, 136, 126, 119, 125, 140, 132, 131, TRs 16, 17, 18, 19	Laser Beam (Both Sides)
ICs 43, 42, 58, 49, 57, 99	Sounds Enable (To Sound Board)
ICs 114, 109, 103, 97, 102, 108 TRs 1, 2, 3, 4, 5, 6	Score Displays
ICs 102, 108, TRs 7, 8, 9, 10, 11, 12, 13, 14, 15,	Barrier, Round, and Credit Bar LED Displays
ICs 65, 99	Coin Counters 1 and 2, Coin Reject Coils 1 and 2

One of the more unique output devices in the game is the LED laser beams. It consists of two boards, each of which contains 60 green LEDs of three sizes. Refer to page F of the schematics to see how it operates: IC 94, a 74LS165, is a shift register that receives 8 bits from the data bus and clocks them out in series at pin 9. These pulses ("LED CP") are applied to pin 1 of IC 140 (page J of schematics). Depending on the 8 bits loaded into IC 94, the shift register, the clock pulses will **appear** to make the LED laser beams move fast or slow. If the enemy invaders on the screen are far away (as in the beginning of the game), the laser beams appear to move slowly. When the invaders are close, the beams seem to move faster. Eprom #217 (IC 136, page J of schematics) outputs the correct sequence of data to the 75468 transistor arrays, #125 and 119. They, in turn, activate the LEDs on the laser beam boards in rapid succession.

e) Static Problem: (See page B—CPU schematic)

The logic board contains a circuit that resets the microprocessor (IC 138), if a large static charge is applied to the game. This circuit consists of an antenna and ICs 155 and 151. The antenna picks up the static charge and triggers the ICs to reset the 8080A. If this circuit is **too sensitive** to static, add a 3300 (3.3K) ohm resistor at R53 on the logic board, and this will decrease the circuit's sensitivity. Also, the antenna wire can be shortened, or removed, if necessary.

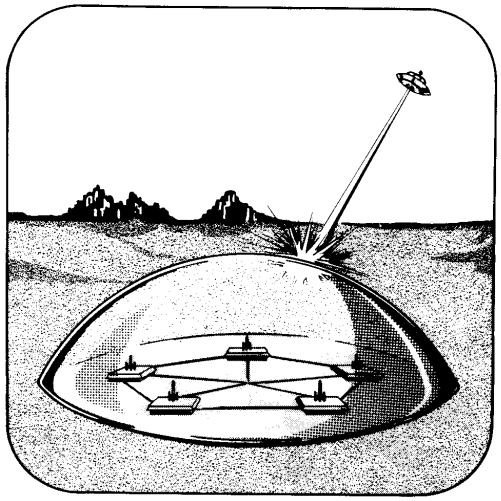

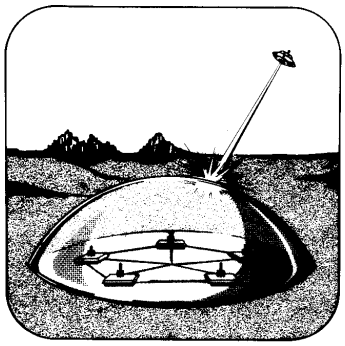

game adjustments

The following adjustment procedure shows how to keep the game's electro-mechanical assemblies running efficiently.

1. Mirror Motor Adjustments:

(Refer to Figure 1)

a) Turn **off** game power and separate the game halves.

b) Locate the mirror motor assembly in the top of the rear half. Rotate the screw axis (Fig. 1) to ensure it turns freely. The mirror should move up and down smoothly. If it does not, adjust the two screws (Fig. 1) holding the screw axis collar and/or adjust the bolt on the screw axis collar (Fig. 1) to tighten or loosen the ball bearing inside the collar. Keep the screw axis oiled lightly from time to time.

c) Ensure that the mirror sensor disc (Fig. 1) turns freely between the mirror CP sensors (Fig. 1). If not, position the CP sensor bracket (Fig. 1) by loosening its screws (Fig. 1) and moving the bracket up/down, or left/right as necessary. The sensor disc should not scrape against any part of the opto-isolators.

d) Adjust the 3 mirror sensors by rotating the mirror in its down position. Check the mirror sensor shutter (Fig. 1) to ensure its notch passes the **down** mirror limit sensor (Fig. 1). Follow the same procedure for the **center** (Fig.1) and **up** (Fig. 1) mirror sensors. If any are out of alignment, position the 3 sensors by loosening screws (Fig. 1) and moving the sensor brackets (Fig. 1) back and forth, left and right as needed. The mirror sensor shutter (Fig. 1) should move freely **without** touching the opto-isolators.

e) It may also be necessary to raise or lower the mirror sensor shutter stop (Fig. 1) with its two screws. This will help position the shutter, as needed.

f) Keep the motor ball bearing (Fig. 1) lightly oiled.

FIGURE 1

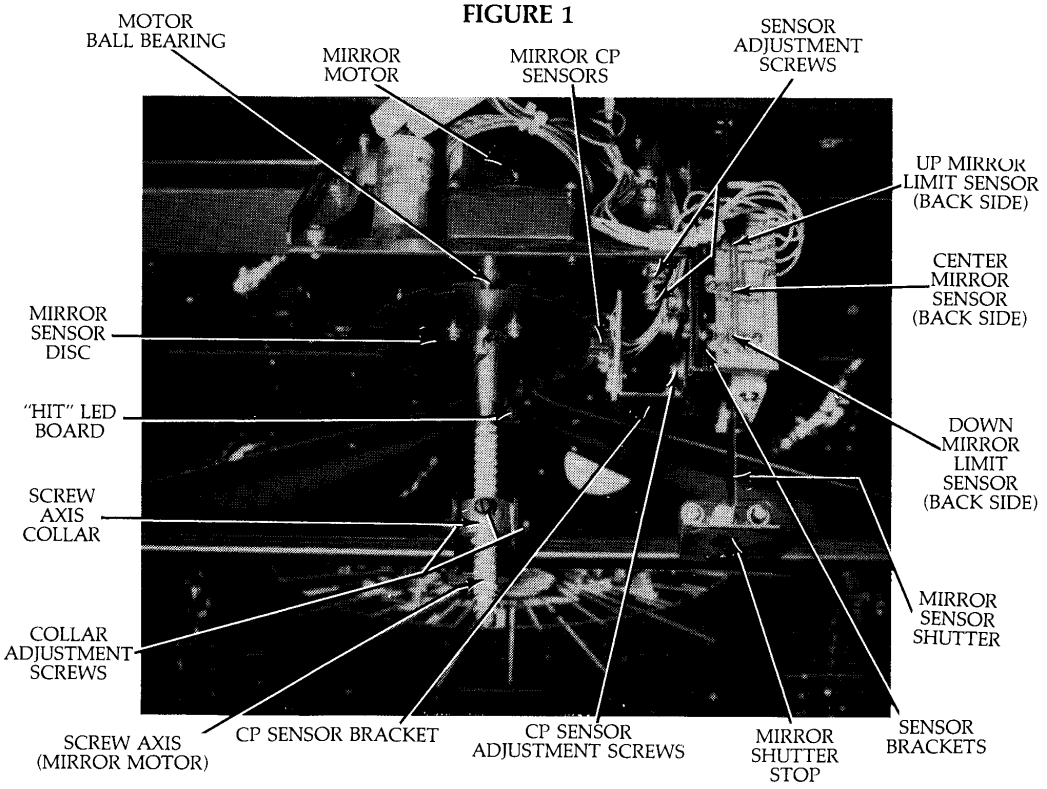

FIGURE 2

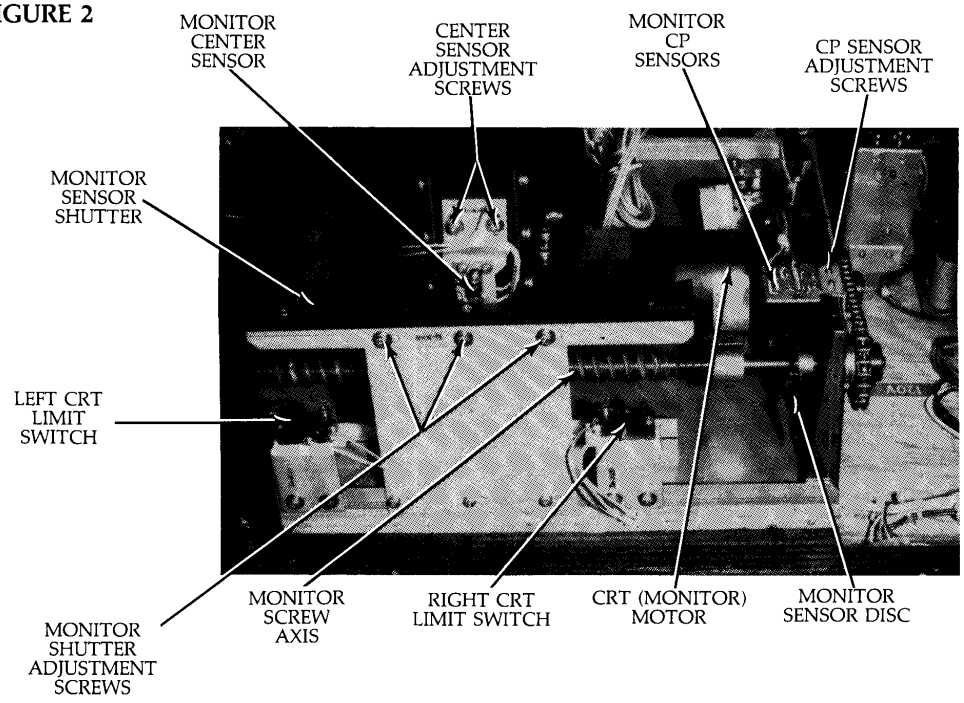

2. Monitor Mirror Adjustments:

a) Unlock and remove the service door located on the side of the rear game half. (See Figure 2.) **Power should be off.**

b) Check the monitor sensor shutter (Fig. 2, 3) to ensure it is not bent. If necessary, remove it to straighten. Note that the monitor center sensor (Fig. 2) slides left and right along the monitor sensor shutter (Fig. 2). Be sure it moves freely without touching the shutter. If needed, move the shutter up/down, or left/right by loosening its screws (Fig. 3) to align. Also, the center sensor (Fig. 2) can be moved up or down by loosening its screws (Fig. 2). Inspect it to make sure it is not cracked.

c) Check that the monitor assembly guide pin (Fig. 3) moves freely back and forth along the monitor screw axis (Fig. 3) and guide path (Fig. 3).

d) The monitor screw axis collar (Fig. 3) must slide smoothly on the axis. It may need adjustment by loosening or tightening the ball bearing bolt (Fig. 3) on the collar. Keep the screw axis lightly oiled.

e) As the monitor assembly moves left and right, it activates the CRT Limit switches to prevent it from moving too far. The **left** CRT Limit switch (Fig. 2) and the **right** Limit switch (Fig. 2) should be checked to ensure the monitor assembly activates them. If necessary, realign the switches by moving them left or right on their brackets.

f) The monitor/mirror assembly fits into and pivots on the base (Fig. 3). Periodically check it to be sure it is oiled, and that the ball bearing inside it turns freely.

g) Be sure the monitor sensor disc (Fig. 3) rotates between the monitor CP sensors (Fig. 3) easily and does not scrape the sides. If necessary, realign the monitor CP sensors (Fig. 3) with their screws (Fig. 2).

h) To adjust the tension on the sprocket chain (Fig. 4), loosen the motor-mounting nuts (Fig. 4) slightly, and turn the tension bolt (Fig. 4) to loosen or tighten the sprocket chain. **Do not** make the chain too loose or too tight. There should be a **small** amount of slack in the chain, for best results.

3. Alignment of Mirror and Motor During Self-Test Mode:

As was mentioned, the game displays a yellow "X" on the screen during the self-test (See Maintenance). Also, the "hit" LED flashes on at this time to allow alignment of both mirror and monitor assemblies. If the red LED does not line up with the "X",

FIGURE 3

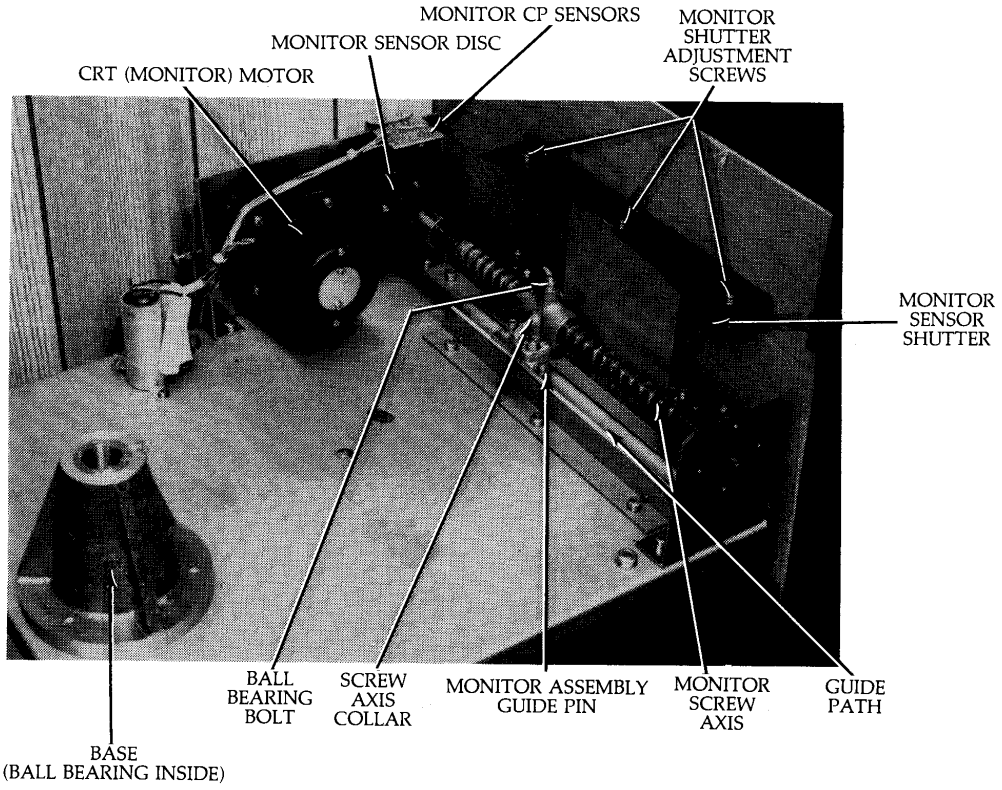

i) **Important Note:** If the game is to be run on either a 50 HZ or 60 HZ line, the two motor sprocket wheels must be checked before operating the game.

For 60 HZ line: Sprocket wheel at position A (see Figure 4) must have 22 teeth. The sprocket at position B (Fig. 4) must have 20 teeth.

For 50 HZ line: Reverse the sprockets—20-teeth sprocket at A; 22-teeth sprocket at B.

follow this procedure:

a) If the "X" appears above the LED, adjust the mirror limit sensors (Fig. 1) by moving the sensor board upward slightly. Loosen the board's screws (Fig. 1) to slide the bracket up. The "X" and LED can also be matched up by sliding the "hit" LED board (located between the laser beam boards—see Figure 1) up or down, as required. This board moves up or down by loosening its mounting screws.

b) If the "X" appears to the left or right of the "hit" LED, adjust the position of the monitor sensor shutter (Fig. 2). Loosen its mounting screws (Fig. 2) and slide it left or right, as needed.

c) Finally, turn the steering handle left/right and up/down, and check that the "X" and LED are matched up again.

4. Steering Handle Adjustments:

a) Figure 5 shows the top view of the complete steering mechanism. Note the positions of the **UP** and **DOWN** switches. These are activated by the guide pin when it slides against the switch actuators. The guide pin should be centered in the slot when the mechanism is not activated. If it is not, loosen the guide pin collar (see Figure 6) and slide it up or down the steering shaft to realign it.

b) Figure 6 shows the inside view of the steering assembly. The **LEFT** and **RIGHT** switches are normally closed until deactivated by the CAM, as shown. Adjust the right/left switches for proper operation by the CAM. Two rubber rollers limit the left/right direction of the steering handle.

c) To replace the "fire" switch in the steering handle, simply unscrew the set-screw on the side of the switch and lift out the switch. Solder the switch leads to the new switch. Push it into place and retighten the set-screw.

FIGURE 4

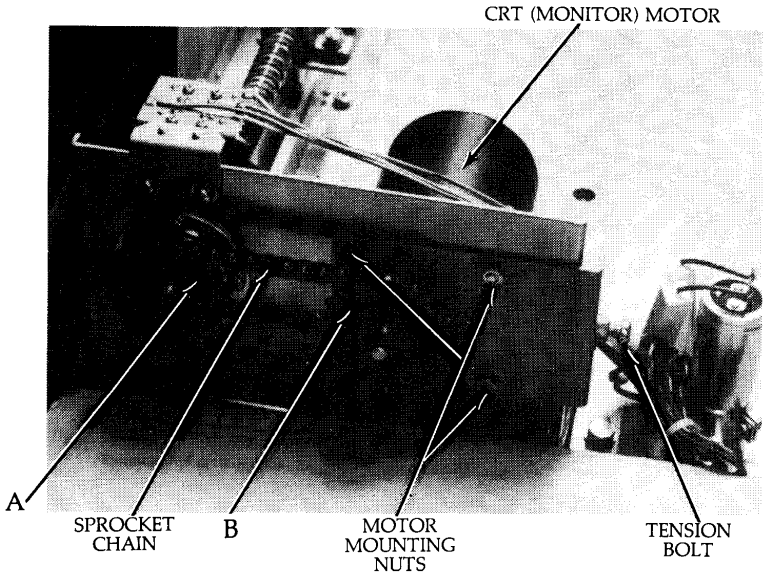

FIGURE 5

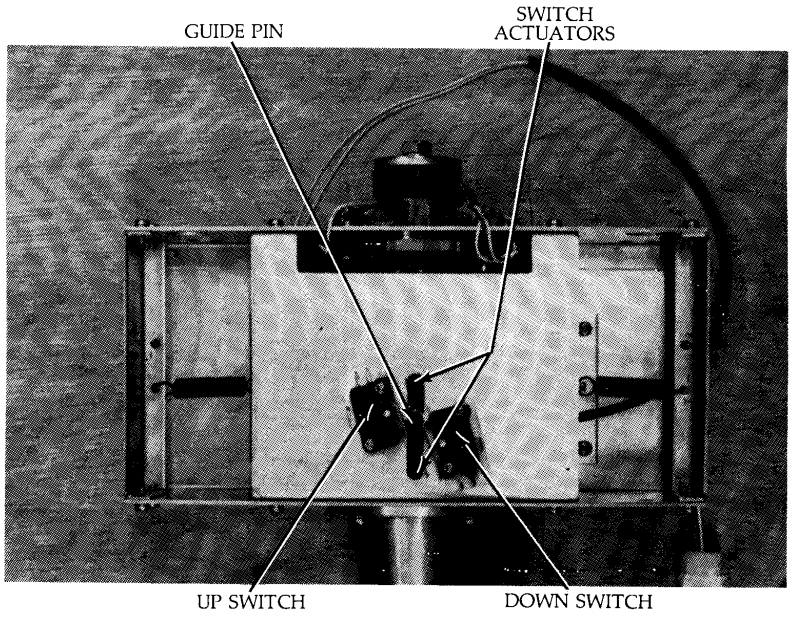

5. Monitor Removal Instructions:

Should it be necessary to remove the game monitor, follow the following procedure:

a) **Unplug** the game from the wall outlet.
b) Separate the game halves.
c) Remove the bolts holding the screen graphics assembly (see Figure 7) on both sides of the monitor.
d) Disconnect the monitor harnesses at the bottom of the monitor. Take out the monitor mounting bolts (Fig. 8).
e) Then, remove the monitor. **DO NOT BUMP THE MONITOR AGAINST THE FRAME!**
f) **CAUTION:** When replacing the color monitor, **gently** set the monitor on its mounting brackets! The neck of the monitor tube could be damaged if it hits the lower frame!
g) Bolt the monitor back in place, and reattach the screen graphics assembly.
h) Then, reconnect the monitor harnesses at the bottom of the monitor. Make sure they are connected SECURELY.

6. Miscellaneous Adjustments:

a) Inside the coin-entry door, on the upper edge, is a Control Block, as shown. The functions of these controls are:

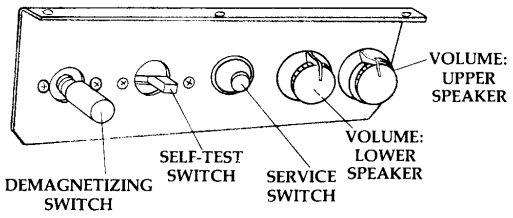

Demagnetizing Switch:	Pushing this switch clears any color distortion on the color monitor.
Self-Test Switch:	This activates the game self-test feature.
Service Switch:	This credits a game without advancing the coin counter.
Volume Controls:	One control for each speaker, upper and lower.

FIGURE 6

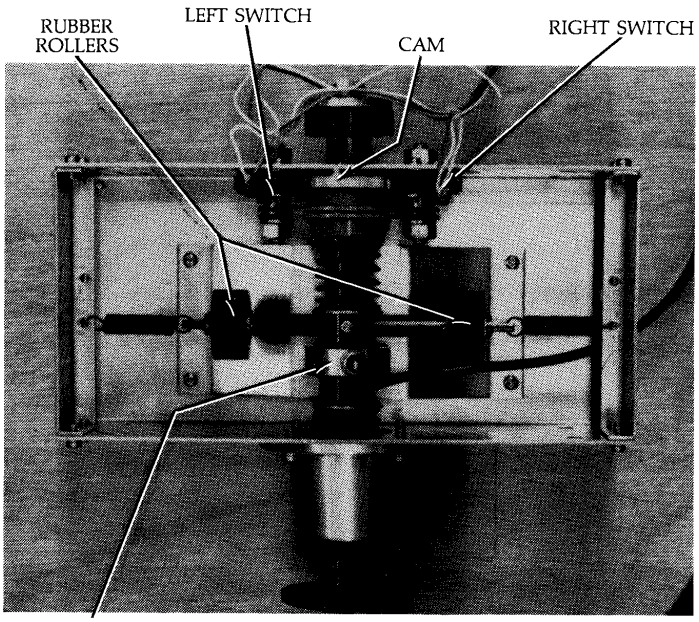

FIGURE 7

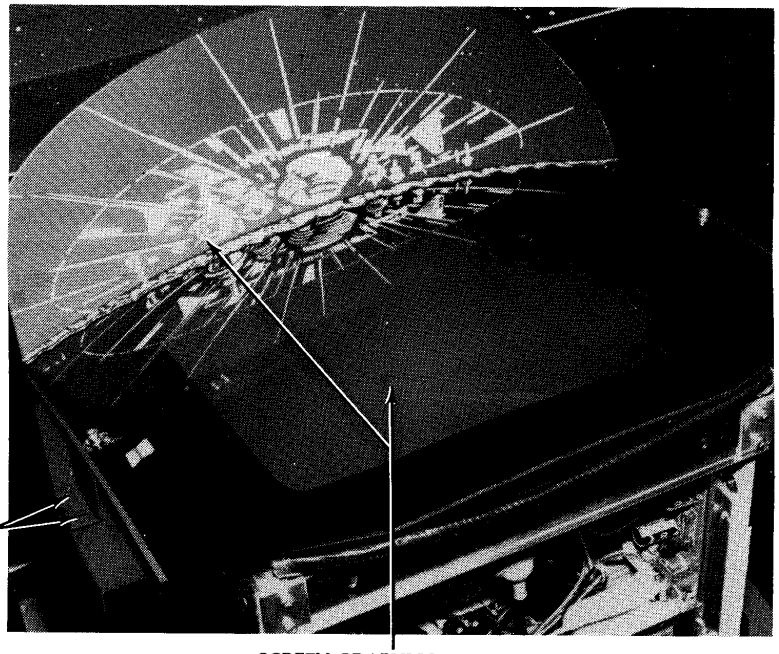

b) Voltage Conversion Instructions:

i) **Unplug the game from the wall outlet!**
ii) Refer to the chart below to select the proper line voltage for the game.

Then, wire the game transformer to match the selected voltage wiring diagram below. Be sure to make good solder connections when re-wiring. **Check the wiring before turning on the game!**

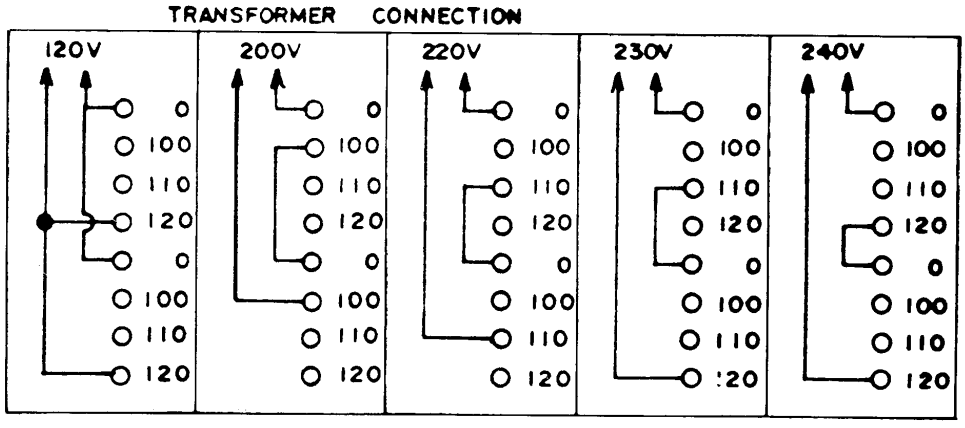

iii) **DO NOT** change any wiring to the color monitor!

iv) If the new line voltage is at 50 HZ, and the game **originally** ran on a 60 HZ line (or vice versa), the monitor motor sprockets must be changed. See section 2i, under "Monitor Motor Adjustments" for instructions.

FIGURE 8

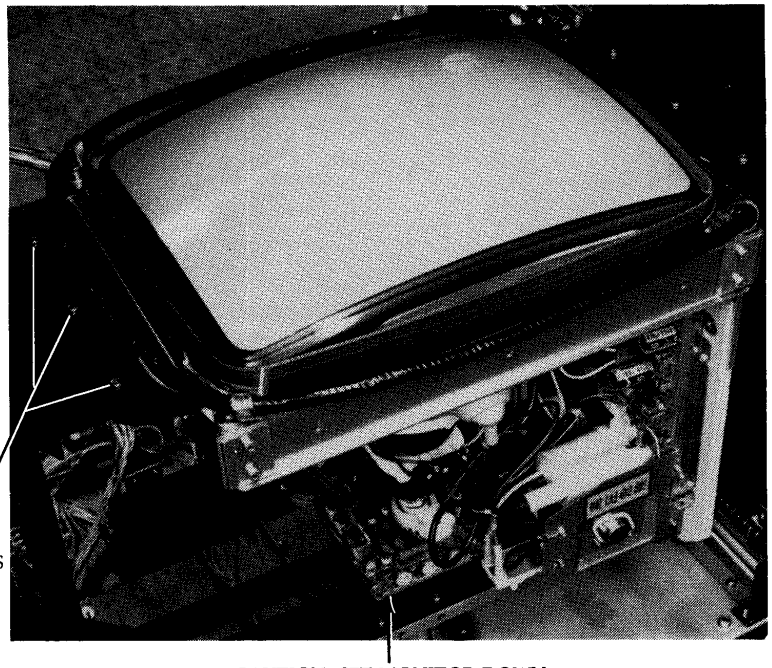

c) Game Option Selection:
Refer to the chart below to select the desired game options.

Switch 1

1	2	3	4	5	6	7	8	OPTION	
off	off	off						COIN MECH. 2	1 COIN 1 PLAY
off	on	off							2 COINS 1 PLAY
off	on	on							4 COINS 1 PLAY
on	off	off							1 COIN 2 PLAYS
on	on	off							1 COIN 3 PLAYS
on	off	on							1 COIN 4 PLAYS
off	off	on							1 COIN 6 PLAYS
			off	off	off			COIN MECH. 1	1 COIN 1 PLAY
			off	on	off				2 COINS 1 PLAY
			off	on	on				4 COINS 1 PLAY
			on	off	off				1 COIN 2 PLAYS
			on	on	off				1 COIN 3 PLAYS
			on	off	on				1 COIN 4 PLAYS
			off	off	on				1 COIN 6 PLAYS
						off		NO HIGH SCORE INITIAL ENTRY	
						on		HIGH SCORE INITIAL ENTRY	
							off	ADVERTISING SOUND OFF	
							on	ADVERTISING SOUND ON	

Switch 2

1	2	3	4	OPTION
off			NOT USED	GAME STARTS WITH 4 BARRIERS
on				GAME STARTS WITH 6 BARRIERS
	off			1 BONUS BARRIER—if you hit all invaders and saucer (UFO)
	on			2 BONUS BARRIERS
		on		EXTENDED PLAY – bases return if you hit credit switch when 1 base remains (must have at least 2 credits on)
		off		NO EXTENDED PLAY

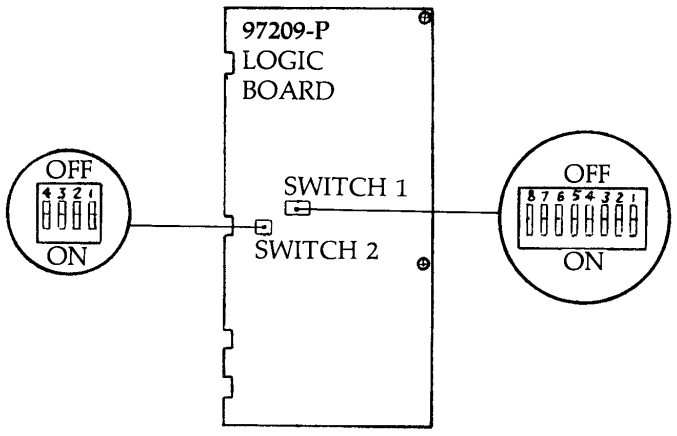

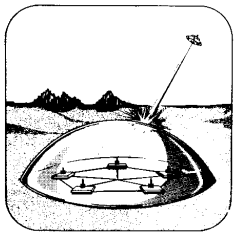

parts section

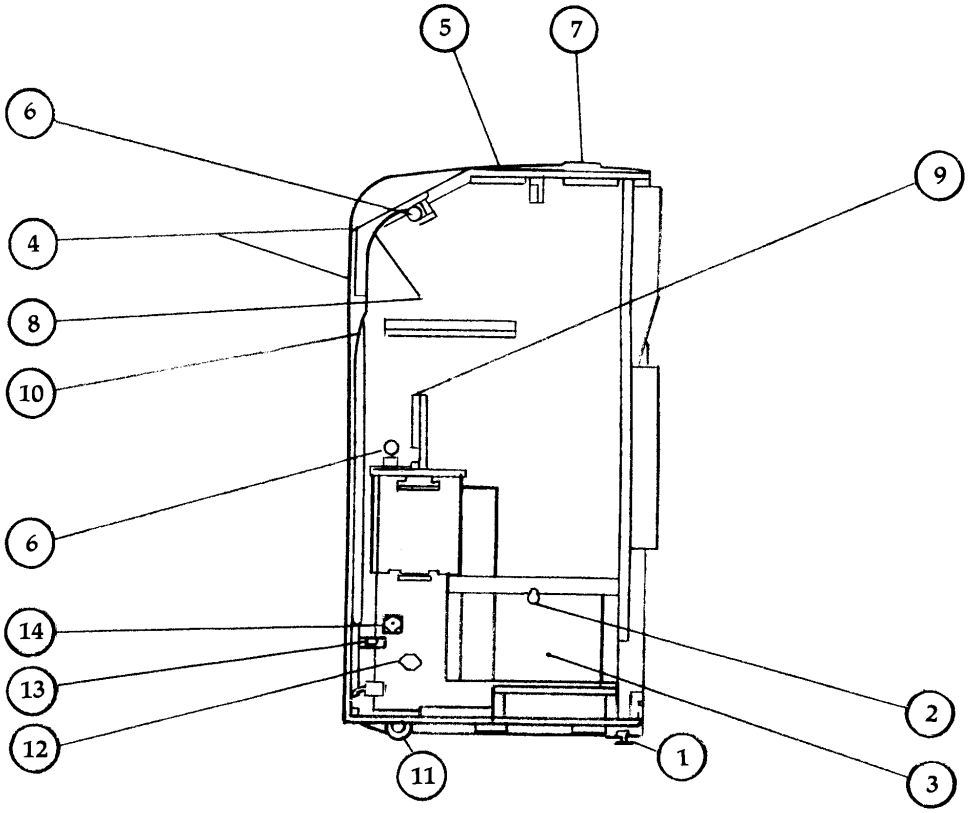

Rear Cabinet Assembly

ITEM #	DESCRIPTION	SEGA #	GREMLIN #
1	Leg Adjuster (2)	M-163-4	601-0455
2	Lock Tongue (Service Door)	PB-1022	601-0587
3	Service Door	TI-1111	601-0588
4	Ornament Edging (Cabinet Trim)	TI-1109-B	601-0589
5	Air Vent (2)	PT-0342	601-0097
6	Ultraviolet Lamp Tube (2)	S-92035	390-0045
7	Shipping Bracket	SGB-2517	105-0161
8	Graphics, Upper	TI-1118	420-0546
9	Graphics, Front	TI-1119	420-0548
10	Graphics, Back	TI-1120	420-0547
11	Caster Wheels, (2)	S-81159	601-0391
12	Line Filter	S-96634	601-0429
13	Power Switch	S-90834	509-0039
14	Outlet, AC Type	S-91449	601-0484

Front Cabinet Assembly

ITEM #	DESCRIPTION	SEGA #	GREMLIN #
1	Window Graphics, Right (Page 26)	TI-1082	420-0544
2	Window Graphics, Left (Page 26)	TI-1083	420-0545
3	Front Window	TI-1051	253-0207
4	Back Window (Hood)	TI-1050	252-0131
5	Back Window Rod	TI-1077	601-0590
6	Ornament Boss	TI-1078	129-0009
7	Speaker, 16cm, 8 ohm (2)	S-96965	130-0018
8	Upper Speaker Guard Plate	TI-1062	105-0222
9	Upper Speaker Net	TI-1061	601-0596
10	Lower Speaker Guard Plate	TI-1056	117-0131
11	Lower Speaker Net	TI-1055	601-0558
12	Floor Mat	TI-1052	320-0043
13	Edge Protector (2)	TI-1053	601-0599
14	Hold Bracket (Back Window)	TI-1057	105-0223
15	Ornament Frame, Lower	TI-1058	601-0598
16	Ornament Frame, Upper	TI-1059	601-0597
17	Hold Bracket (Front Window)	TI-1063	105-0221
18	Cabinet Handles (2)	TI-1076	109-0041
19	Ultraviolet Lamp Tube	S-91058	390-0038
20	Leg Adjuster	M-163-4	601-0455

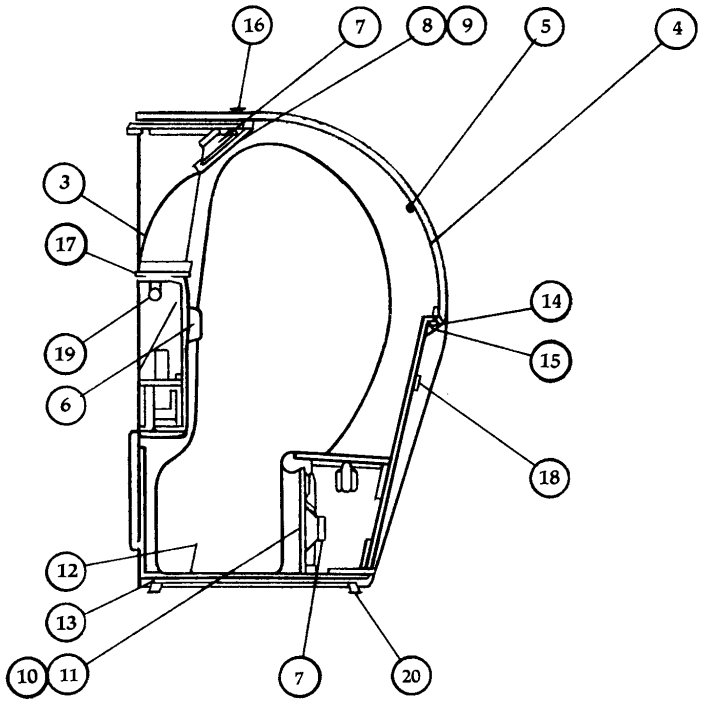

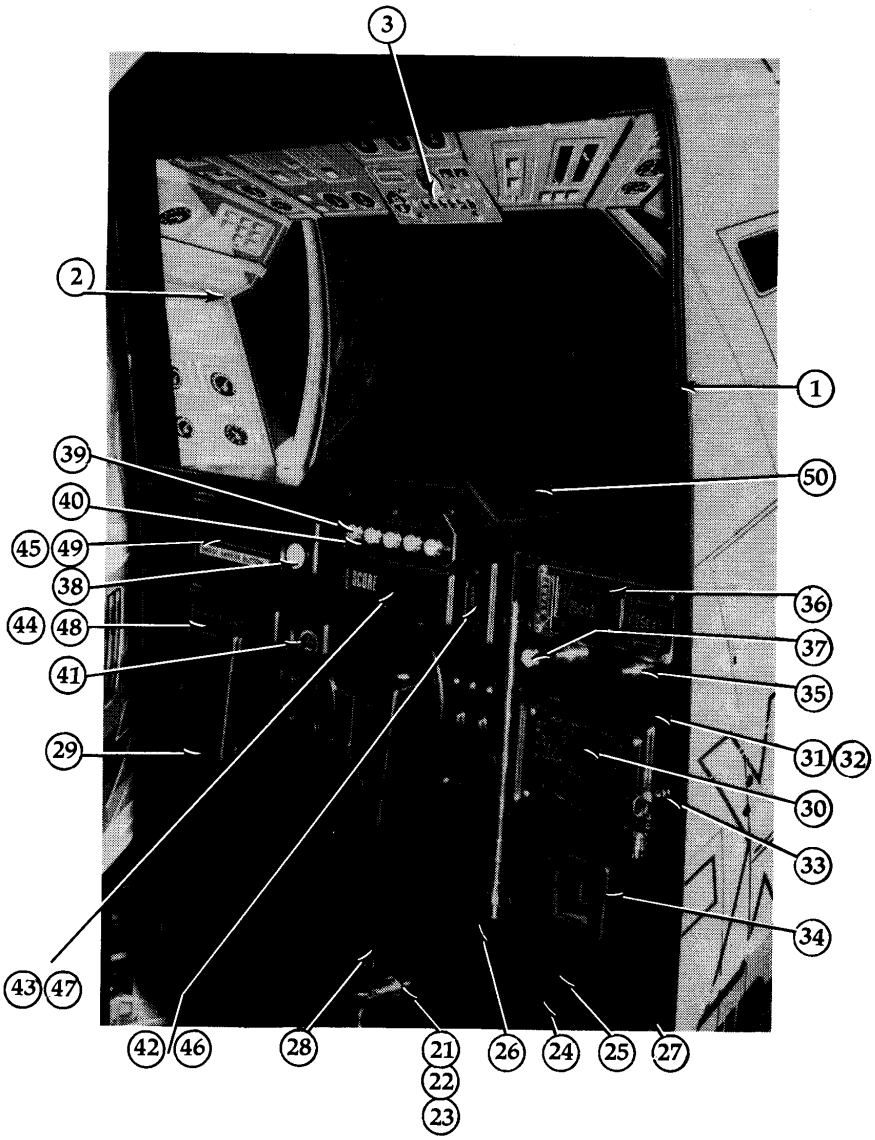

Front Cabinet Assembly, Continued

	--Front Panel--		
21	Door Lock (For Cash Box Door, Service Door, Back Door, and Coin Entry Door)	LS-1064	220-0097
22	Lock Tongue	SH-1044	601-0066
23	Lock Retainer Bracket	TI-1080	105-0220
24	Cash Box Door	TI-1064	601-0595
25	Cash Box (Not Shown—Behind Box Door)	TI-1065	220-0162
26	Cash Box Door Frame, Upper	TI-1066	601-0594
Not Shown	Cash Box Door Frame, Lower	TI-1067	601-0593
27	Cash Box Door Frame, Right	TI-1068	601-0592
28	Cash Box Door Frame, Left	TI-1069	601-0591

Front Cabinet Assembly, Continued

ITEM #	DESCRIPTION	SEGA #	GREMLIN #
29	Strategy Instruction Plate, English	TI-1085	117-0129
	Strategy Instruction Plate, Japanese	TI-1084	--------
30	Play Instruction Plate, English	TI-1232	117-0131
	Play Instruction Plate, Japanese	TI-1230	--------
31	Coin Entry Door	TI-1218	601-0586
32	Coin Entry Door Cover	TI-1219	601-0585
33	Lock Tongue (Coin Door Lock—Not Shown)	TI-1231	601-0584
Not Shown	Coin Entry Bracket A	DH-1045	105-0219
Not Shown	Coin Entry Bracket B	DH-1046	105-0218
34	Reject Cup W/Flap Door	AH-1062	601-0416
35	Reject Button Assembly (2)	MP-1017	240-0097
Not Shown	Reject Lever Spring (2)	OL-3018	125-0091
36	Coin Entry Plate, USA	TI-1223	117-0140
	Coin Entry Plate, Japan	TI-1222	--------
37	Credit Switch	S-97228	509-0125
Not Shown	Switch Lamp (6V)	S-97230	390-0090
Not Shown	Coin Mechanism, USA	--------	800-0103
	Coin Mechanism, Japanese	CC-2006	220-0084
Not Shown	Volume Control, 25k ohm (2)	S-93157	220-0111
(All are	Volume Control Knob (2)	S-90595	601-0042
located	Demagnetizing Switch	S-96397	240-0105
inside	Button-Demagnetizing Switch	S-96400	240-0106
coin	Service Switch	S-96405	509-0111
door)	Self-Test Switch	S-93640	509-0057
	--Front Panel Switches, Displays--		
38	Barrier Switch, Yellow	S-97229	509-0121
39	Base Switch, Red (5)	S-97227	509-0123
40	Base Switches Plate	TI-1418	117-0146
Not Shown	Switch Bracket, Base Switches	TI-1417	105-0224
Not Shown	Bar-Graph LED (Red, Rectangular; for Credit, Barrier and Round Displays)	S-97231	390-0086
41	Decal, Meter	TI-1407	420-0566
42	Mask, Credit (Clear Red Plastic)	TI-1411	601-0572
43	Mask, Score	TI-1410	601-0571
44	Mask, Round	TI-1409	601-0570
45	Mask, Barrier	TI-1408	601-0568
46	Credit Display Plate, (Clear Plastic)	TI-1405	117-0139
47	Score Display Plate	TI-1404	117-0138
48	Round Display Plate	TI-1403	117-0137
49	Barrier Display Plate	TI-1402	117-0136
Not Shown	7-Segment Readout (Score Display)	S-96601	481-0071
Not Shown	Switch Lamps (6V)	S-97230	390-0090
50	Front Panel	TI-1401	601-0569

Monitor, Motor and Frame Assembly

ITEM #	DESCRIPTION	SEGA #	GREMLIN #
1	Monitor Sensor Shutter	TI-3068	117-0134
2	Holder Plate	TI-3070	117-0145
3	TV Mask (Plexi)	TI-3078	601-0563
4	TV Mask (Black Paper)	TI-3082	601-0566
5	TV Graphics A (Dome)	TI-3079	420-0554
6	TV Graphics B (Strip)	TI-3080	420-0555
7	Graphics Bracket (2)	TI-3081	105-0225
8	TV Mounting Bracket (2)	TI-3085	105-0214
9	*Color Monitor, 15" (16 Type)	96887-P	601-0562
10	Pivot Housing	TI-3009	252-0134
11	Screw Axis (Monitor)	TI-3011	280-0338
12	Guide Pin	TI-3012	280-0339
13	Sensor Disc	TI-3014	106-0057
14	Flange	TI-3074	280-0337
15	Guide Bracket (2)	TI-3017	105-0213
16	Lead Plate (2, Nylon)	TI-3018	117-0135
17	Switch Bracket, A	TI-3019	105-0212
18	Switch Bracket, B	TI-3020	105-0211
19	Monitor CP Sensor Board, C	TI-3083	601-0567
20	Collar (Monitor Screw Axis)	HT-3045	250-0465

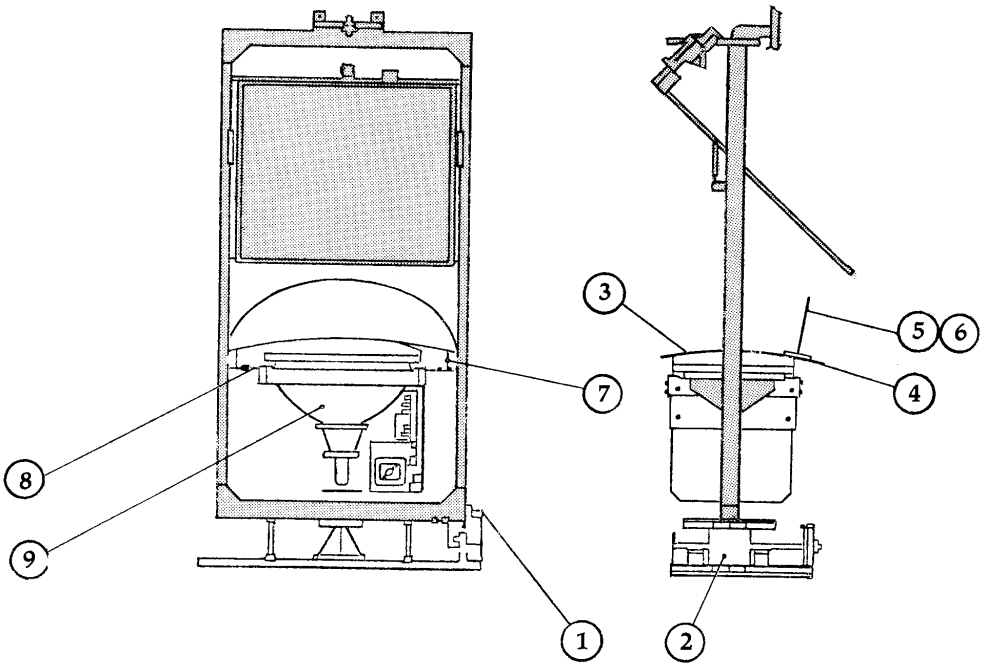

Monitor, Motor and Base Assembly, Continued

ITEM #	DESCRIPTION	SEGA #	GREMLIN #
21	Sprocket Wheel (20 teeth)	TI-3075	350-0174
22	Sprocket Wheel (22 teeth)	TI-3076	350-0176
23	Chain (45 links)	TI-3077	280-0336
24	Coupler	TI-3086	280-0351
25	Compression Spring	TI-3087	125-0098
26	Ball Bearing (2)	S-82387	100-0011
27	Ball (For Screw Axis Collar)	S-80042	101-0010
28	Ball (For Pivot Housing)	S-80674	101-0009
29	Monitor Right, Left Limit Switch	S-91421	509-0048
30	Monitor Motor	S-97226	350-0172
Not Shown	Sensor (Opto-Isolator for Sensor Boards A, B, C, D)	S-97086	601-0582

*The color monitor contains a 15" color tube. This is the same size as "Color Display 16 Type".

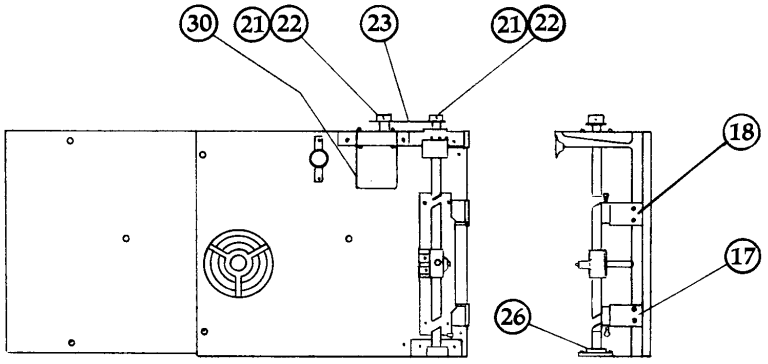

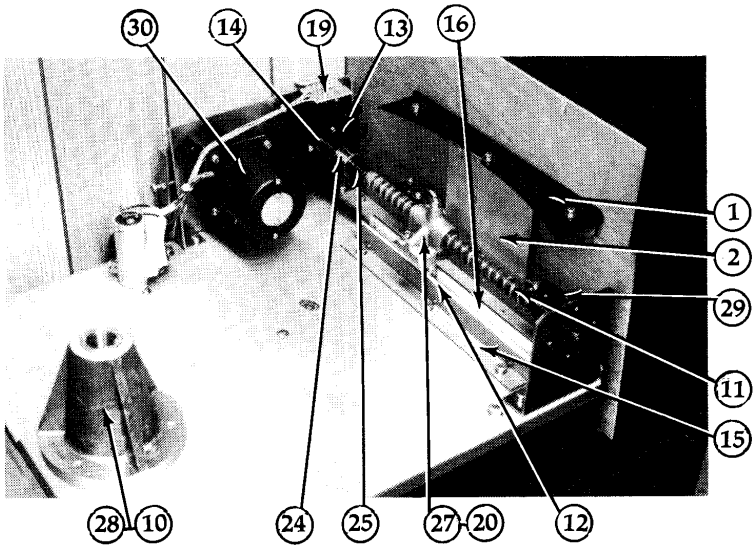

Mirror, Motor and Frame Assembly

ITEM #	DESCRIPTION	SEGA #	GREMLIN #
1	Mirror Motor (Page 31)	S-97226	350-0172
2	Universal Joint (Page 31)	TI-3076	350-0173
3	Spindle Shaft	TI-3064	123-0060
4	Ball Bearing	S-82597	100-0014
5	Bearing Housing	TI-3030	250-0464
6	Collar Bracket	TI-3060	252-0133
7	Steel Ball (Inside Collar)	S-80021	101-0008
8	Collar (Mirror Screw Axis)	TI-3059	601-0576
9	Shoulder Screw	TI-3061	280-0352
10	Half Mirror	TI-3056	275-0072
11	Mirror Frame, Upper	TI-3055	601-0578
12	Mirror Frame, Lower	TI-2054	601-0579
13	Mirror Frame, Right	TI-3053	601-0580
14	Mirror Frame, Left	TI-3052	601-0581
15	Sensor Disc	TI-3073	106-0056
16	Screw Axis (Mirror)	TI-3033X	280-0335
17	Motor Bracket	TI-3031	105-0209
18	Motor Mounting Bracket	TI-3029	105-0210
19	Pivot (Fits Inside Base)	TI-3028	280-0349
20	Monitor Center Sensor Board, A	TI-3022X	601-0565

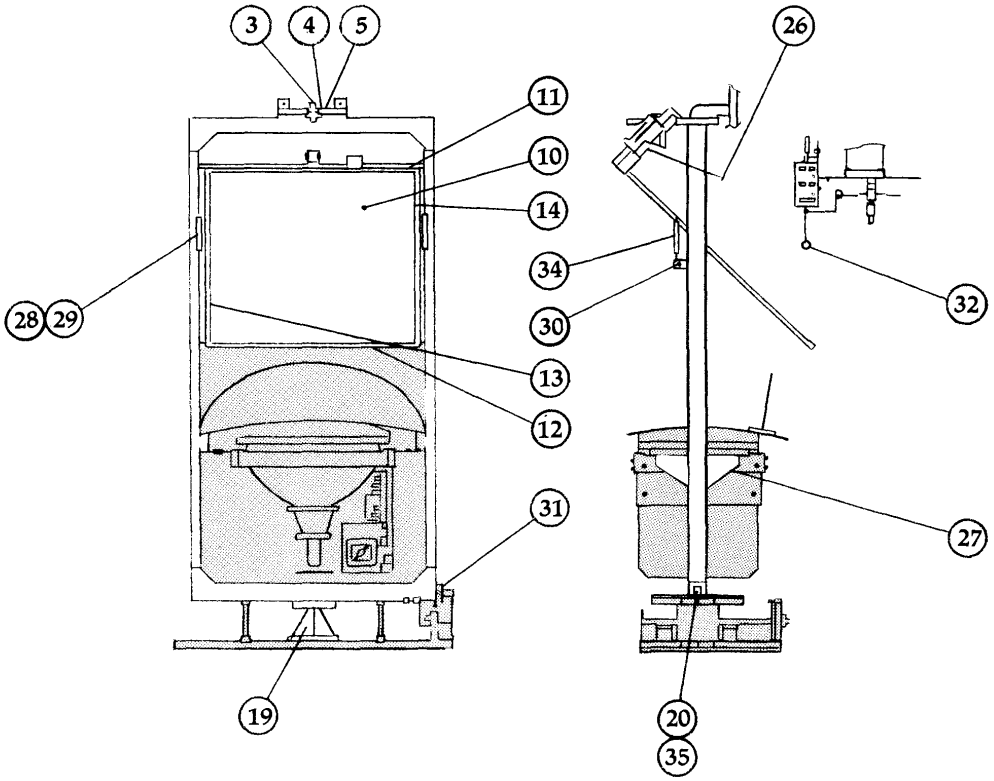

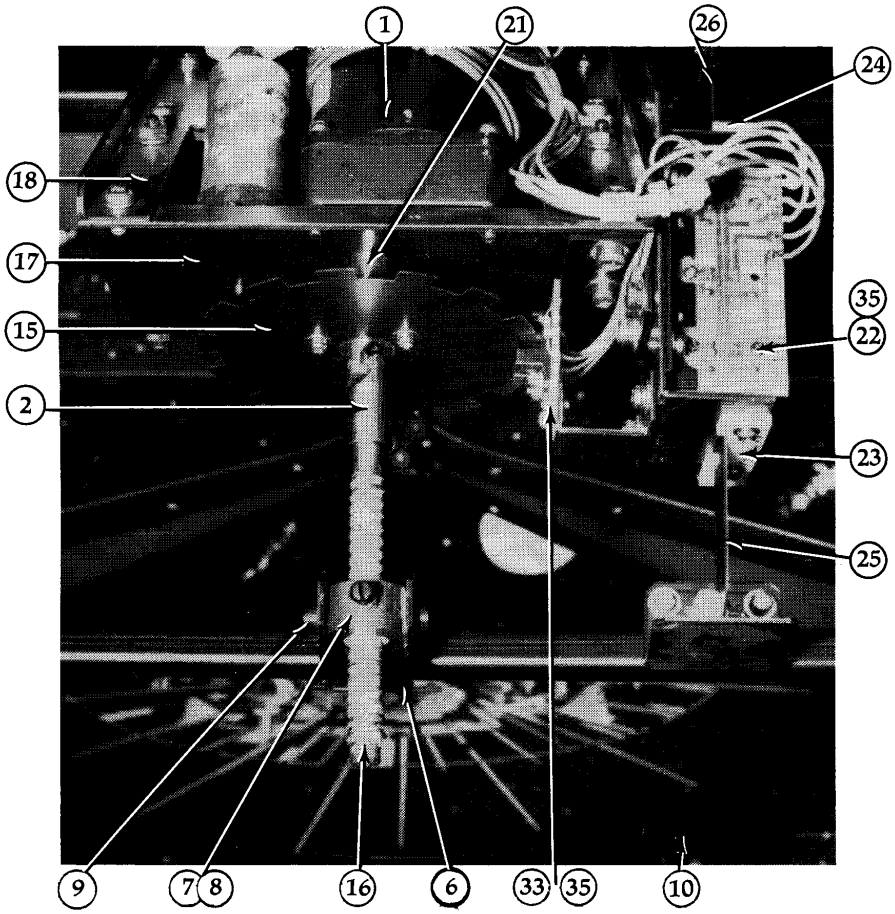

Mirror, Motor and Frame Assembly

ITEM#	DESCRIPTION	SEGA #	GREMLIN #
21	Flange (Behind Sensor Disc)	TI-3015	280-0350
22	Mirror Limit Sensor Board, B	TI-3038X	601-0561
23	Lead Plate A (Nylon)	TI-3040	117-0144
24	Lead Plate B (Nylon)	TI-3041	117-0143
25	Mirror Sensor Shutter	TI-3042	117-0132
26	Extension Spring (For Mirror Sensor Shutter)	TI-3044	125-0095
27	TV Mounting Bracket (2)	TI-3045	105-0207
28	Mirror Holder (2)	TI-3046	109-0039
29	Shoulder Screw (2--For Mirror Holder)	TI-3047	280-0347
30	Spring Hook	TI-3048	280-0346
31	Sensor Board A, Bracket	TI-3049X	105-0206
32	Lead Roller (Wheel)	MP-2025	121-0007
33	Mirror CP Sensor Board, D	TI-3084	601-0564
34	Extension Spring (Mirror)	TI-3071	125-0096
35	Sensor (Opto-Isolator) For Sensor Boards A,B,C,D	S-97086	601-0582

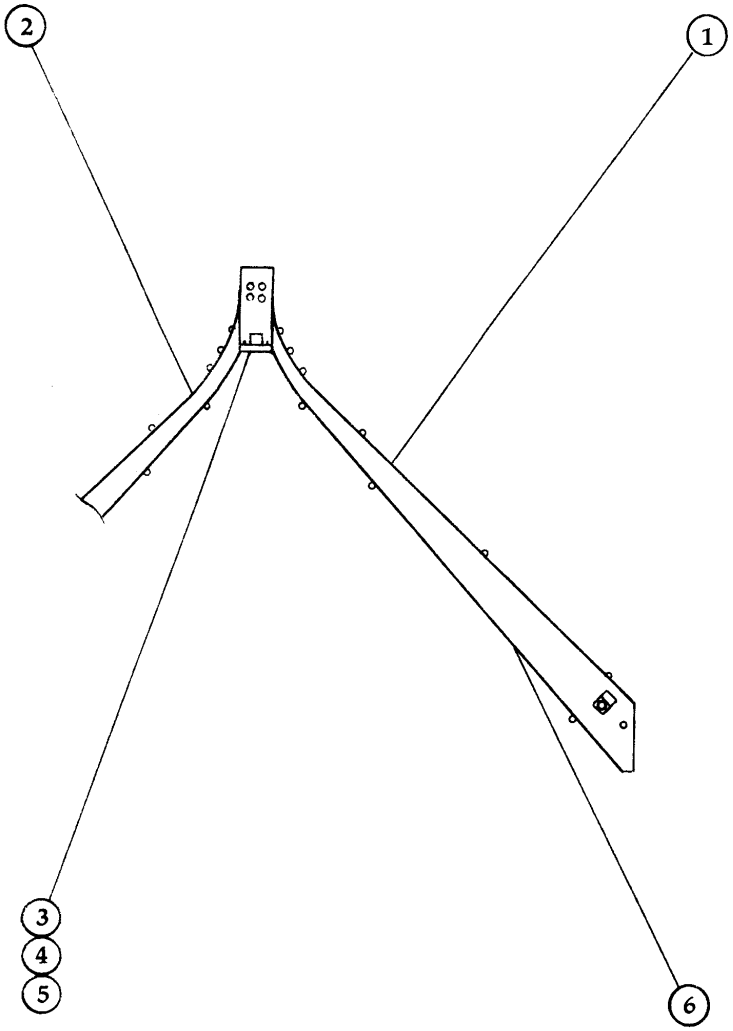

LED Laser Beam Assembly

ITEM #	DESCRIPTION	SEGA #	GREMLIN #
1	LED Board, Right	TI-1303	171-0029
2	LED Board, Left	TI-1302	171-0030
	Green LED, Large	S-96903	390-0093
	Green LED, Small	S-96901	390-0095
	Resistor Array	S-96900	601-0583
3	"HIT" LED Bracket	TI-1306	105-0217
4	"HIT" Holder	TI-1308	109-0040
5	"HIT"LED, Red	S-97225	390-0085
6	Screen (2)	TI-1304	601-0559

Power Supply Asembly

ITEM #	DESCRIPTION	SEGA #	GREMLIN #
1	Switching Regulator	S-96560	601-0158
	2SC2335 Transistor	--------	482-0084
	uPC 1042 IC	--------	316-0706
	TL 494 IC	--------	312-0222
2	Power Transformer	97239	560-0057
3	Power Amplifier (2)	97084-P	110-0018
	TA 7216P	S-97072	313-0043
4	Regulator Unit	TI-4007	601-0573
	7812 IC	S-96436	313-0014
	7805 IC	S-94267	313-0012
5	Fuse, 2A (2)	S-90644	514-0032
	Fuse, 6A	S-90639	514-0031
	Fuse, 8A (For 120 Volt Use)	S-91151	514-0043
	Fuse, 5A (For 220 Volt Use)	S-90661	514-0034

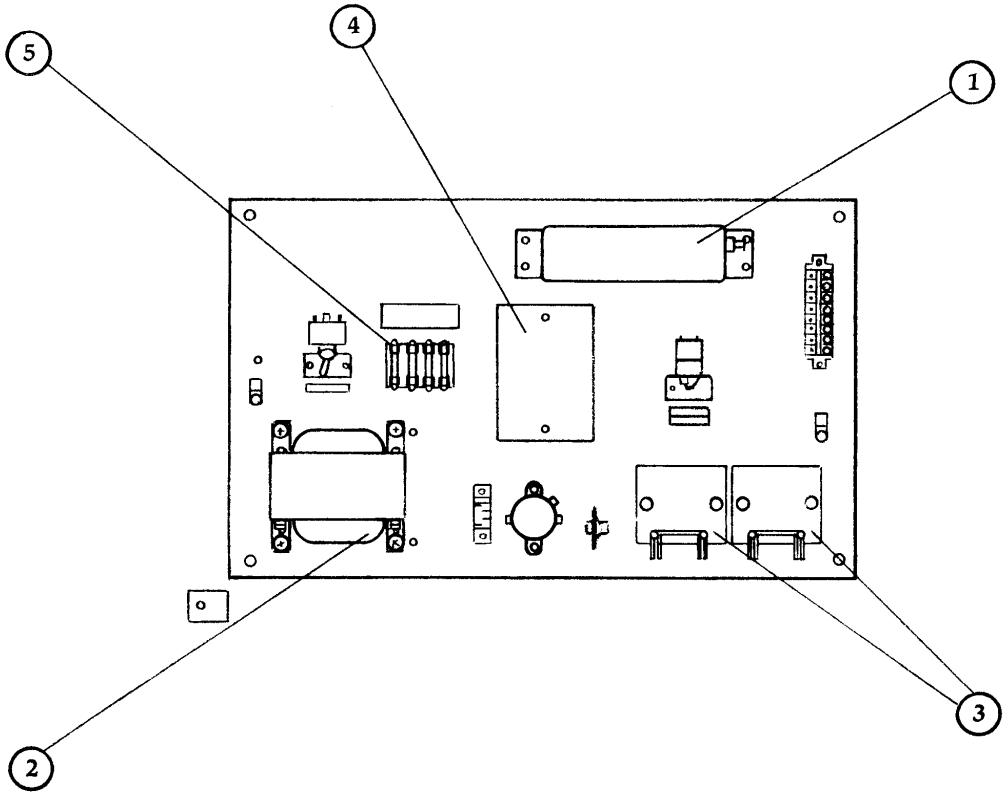

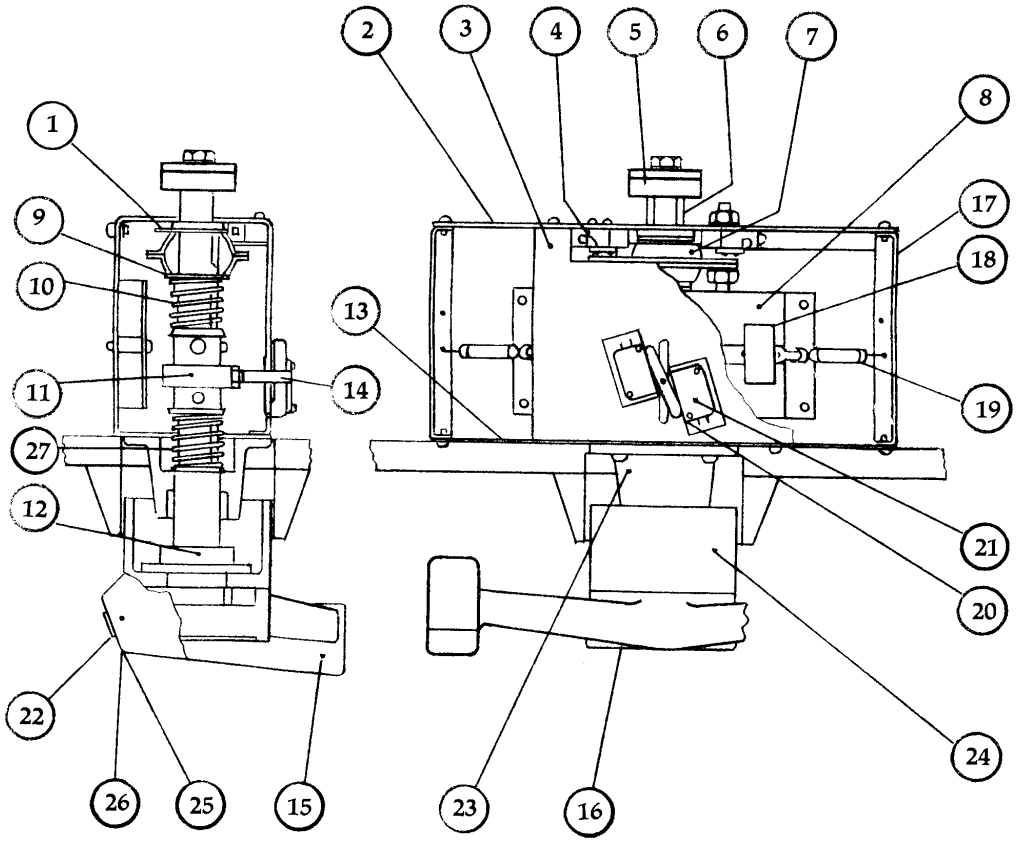

Steering Handle Assembly

ITEM #	DESCRIPTION	SEGA #	GREMLIN #
1	Cam	TI-2040X	350-0175
2	Handle Bracket, Rear	TI-2029	105-0201
3	Upper Bracket	TI-2039	105-0202
4	Switch, (For Left/Right)	S-91421	509-0048
5	Rubber Ring, A	TI-2021	320-0041
6	Handle Shaft	TI-2030	123-0059
7	Bearing, Mini Pillow	S-82465	100-0013
8	Stopper Bracket	TI-2036	105-0203
9	Collar	TI-2032	601-0560
10	Compression Spring	TI-2035	125-0093
11	Guide Pin Collar	TI-2033	129-0007
12	Rubber Ring, B	TI-2022	320-0042
13	Handle Bracket, Front	TI-2028	105-0204
14	Guide Pin	TI-2034	280-0333
15	Handle	TI-2017	109-0037
Not Shown	Wire Cover (On Back of Handle)	TI-2025	280-0334
16	Emblem, Sega	TI-2019	420-0553
17	Supporting Bracket	TI-2038	105-0205

Steering Handle Assembly, Continued

18	Rubber Roller	TI-2020	121-0015
19	Extension Spring	TI-2024	125-0094
20	Actuator	TI-2027	104-0006
21	Switch (Up/Down)	S-91344	509-0118
22	Switch, Push Button, Red (Fire)	S-97452	509-0120
23	Housing	TI-2031	250-0463
24	Handle Boss	TI-2018	129-0008
25	Button Plate (For Fire Switch)	TI-2043	117-0142
26	Switch Holder (For Fire Switch)	TI-2042	109-0038
27	Compression Spring	TI-2026	125-0097

Logic Board Assembly, PT.# 171-0028 (97209-P)

LOCATION	DESCRIPTION	SEGA #	GREMLIN #
DIAC 1,2,3,4	DIAC, 2A (4)	S-93237	601-0574
TRIAC 1,2,3,4	TRIAC, 400V, 3A (4)	S-97467	482-0039
XL	Crystal, 15.46848 MHZ	S-95875	203-0009
PC1, 2, 3, 4	Photo Coupler	S-94928	280-0140
TR16,17,18,19	Transistor, 2SB765K or TIP 125	S-96677	482-0019
IC132	PR-67 Prom	S-94080-67	312-0211
IC123	PR-66 Prom	S-95843-66	312-0212
IC118	PR-65 Prom	S-95843-65	312-0213
IC86	PR-54 Prom	S-95775-54	312-0214
IC146	75365 IC	S-97217	314-0132
IC106	2147 or P2141-4 IC	S-97216	314-0133
IC152,156	AM 91L11APC	S-94984	315-0018
IC142	uPB 8228D	S-96274	314-0134
IC95, 114, 119,125, 131	TD 62003P	S-96678	312-0106
RA11,12,13, 14	Resistor Array, 33 ohmX8, ¼W	S-97219	460-0046
RA8,9,15	Resistor Array, 220 ohmX8, ¼W	S-95706	312-0116
RA3,5	Resistor Array, 560 ohmX8, ¼W	S-95688	460-0047
RA1,2,4,6, 16,18	Resistor Array, 1k ohmX8, ¼W	S95686	601-0237
RA17	Resistor Array, 4.7k ohmX8, ¼W	S-95705	460-0048
TR20, 21,22, 23	2SC458C Transistor	S-92415	482-0043
-------	Bus Bar	97329X	601-0575
IC158	Eprom 0	-------	312-0215
IC157	Eprom 1	-------	312-0216
IC154	Eprom 2	-------	312-0217
IC153	Eprom 3	-------	312-0218
IC150	Eprom 4	-------	312-0219
IC149	Eprom 5	-------	312-0220
IC136	Eprom 217	-------	312-0221

Sound Board Assembly, PT.# 116-0009 (97211-P)

LOCATION	DESCRIPTION	SEGA #	GREMLIN #
IC7	MN 3101 IC	S-96514	313-0040
IC6	MN 3005 IC	S-96513	313-0041
IC2,3,11	MB 4391 M IC	S-96675	312-0209
IC4,5	AN 6551 IC	S-96837	313-0042
IC12	94560 AN IC	S-96464	312-0147
IC13	76477	S-96504	312-0150
IC1	LM 324	S-95783	313-0034

recommended spare parts

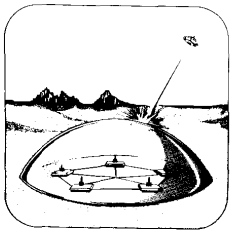

DESCRIPTION	SEGA #	GREMLIN #	QUANTITY PER 5 GAMES
	--LOGIC BOARD--		
DIAC, 2A	S-93237	601-0574	5
TRIAC, 400V, 3A	S-97467	482-0039	5
Crystal, 15.46848 MHZ	S-95875	230-0009	2
Photo Coupler	S-94928	280-0140	2
Transistor, 2SB765K or TIP125	S-96677	482-0019	2
75365 IC	S-97217	314-0132	2
2147 or P2141-4 IC	S-97216	314-0133	3
AM 91L11APC	S-94984	315-0018	3
uPB 8228D	S-96274	314-0134	2
TC 62003P	S-96678	312-0106	2
2SC458C Transistor	S-92415	482-0043	2
Eprom 0	----------	312-0215	1
Eprom 1	----------	312-0216	1
Eprom 2	----------	312-0217	1
Eprom 3	----------	312-0218	1
Eprom 4	----------	312-0219	1
Eprom 5	----------	312-0220	1
Eprom 217	----------	312-0221	1
	--SOUND BOARD--		
MN 3101 IC	S-96514	313-0040	2
MN 3005 IC	S-96513	313-0041	2
MB 4391 M IC	S-96675	312-0209	2
AN 6551 IC	S-96837	313-0042	2
94560 AN IC	S-96464	312-0147	2
76477	S-96504	312-0150	2
LM 324	S-95783	313-0034	3

Recommended Spare Parts, Continued

DESCRIPTION	SEGA #	GREMLIN #	QUANTITY PER 5 GAMES
--LASER BEAM ASSEMBLY--			
Green LED, Large	S-96903	390-0093	10
Green LED, Small	S-96901	390-0095	10
"HIT" LED, Red	S-97225	390-0085	5
--MIRROR, MOTOR AND FRAME ASSEMBLY--			
Mirror Motor	S-97226	350-0172	1
Steel Ball (Inside Collar)	S-80021	101-0008	2
Shoulder Screw	TI-3061	280-0352	6
Half Mirror	TI-3055	601-0578	5
Sensor Disc	TI-3073	106-0056	2
Screw Axis (Mirror)	TI-3033X	280-0335	1
Monitor Center Sensor Board, A	TI-3022X	601-0565	5
Sensor (Opto-Isolator) For Sensor Boards A, B, C, D	S-97086	601-0582	25
--REAR CABINET--			
Leg Adjustor	M-163-4	601-0455	4
Ultraviolet Lamp Tube	S-92035	390-0045	2
--FRONT CABINET--			
Window Graphics, Right	TI-1082	420-0544	1
Window Graphics, Left	TI-1083	420-0545	1
Front Window	TI-1051	253-0207	1
Back Window (Hood)	TI-1050	252-0131	1
Back Window Rod	TI-1077	601-0590	1
Speaker, 16cm, 8 ohm	S-96965	130-0018	1
--FRONT PANEL--			
Door Lock	LS-1064	220-0097	2
Cash Box	TI-1065	220-0162	1
Reject Cup W/Flap Door	AH-1062	601-0416	2
Credit Switch	S-97228	509-0125	3
Switch Lamp, 6V	S-97230	390-0090	25
Coin Mechanism, USA	-------	800-0103	1
Coin Mechanism, Japanese	CC-2006	220-0084	1

Recommended Spare Parts, Continued

DESCRIPTION	SEGA #	GREMLIN #	QUANTITY PER 5 GAMES
--FRONT PANEL SWITCHES, DISPLAYS--			
Barrier Switch, Yellow	S-97229	509-0121	2
Base Switch, Red	S-97227	509-0123	3
Bar-Graph LED	S-97231	390-0086	4
7-Segment Readout	S-96601	481-0071	3
Front Panel	TI-1401	601-0569	1
--STEERING HANDLE ASSEMBLY--			
Cam	TI-2040X	350-0175	2
Switch (For Left/Right)	S-91421	509-0048	2
Rubber Ring, A	TI-2021	320-0041	2
Rubber Ring, B	TI-2022	320-0042	2
Handle	TI-2017	109-0037	1
Actuator	TI-2027	104-0006	3
Switch (Up/Down)	S-91344	509-0118	2
Switch, Push Button Red (Fire)	S-97452	509-0120	5
Button Plate (For Fire Switch)	TI-2043	117-0142	3
Switch Holder (For Fire Switch)	TI-2042	109-0038	3
--MONITOR, MOTOR AND BASE ASSEMBLY--			
Color Monitor, 15"	96887-P	601-0562	1
Screw Axis (Monitor)	TI-3011	280-0338	1
Sensor Disc	TI-3014	106-0057	2
Monitor CP Sensor Board, C	TI-3083	601-0567	1
Sprocket Wheel (20 teeth)	TI-3075	350-0174	1
Sprocket Wheel (22 teeth)	TI-3076	350-0176	1
Chain (45 links)	TI-3077	280-0336	1
Ball (For Screw Axis Collar)	S-80042	101-0010	1
--POWER SUPPLY--			
Switching Regulator	S-96560	601-0158	1
2SC2335 Transistor	-------	482-0084	10
uPC 1042 IC	-------	316-0706	10
Power Amplifier	97084-P	110-0018	1
TA 7216P	S-97072	313-0043	5
7812 IC	S-96436	313-0014	5
7805 IC	S-94267	313-0012	5
Fuse, 2A	S-90644	514-0032	10
Fuse, 6A	S-90639	514-0031	10
Fuse, 8A (For 120 Volt Use)	S-91151	514-0043	10
Fuse, 5A (For 220 Volt Use)	S-90661	514-0034	10
TL 494 IC	-------	312-0222	10

schematics
table of contents

Game Block Diagram, Cabinet Wiring ..... *A*
CPU ..... *B*
Video Ram Page B/Video Ram Page D ..... *C*
Video Ram Page E/Video Ram Page F ..... *D*
Power Connections, Video Ram Page Counters/Eprom ..... *E*
Video Generation, Input Buffers, Dip Switch #1/Scoring Displays ..... *F*
Master Clock: Timing Circuit ..... *G*
Player Controls: Steering, Photo Sensors, Motor Drive ..... *H*
Player Controls: Front Panel Switches/LED Fire Beam ..... *I*
Oscillator: UFO Hit Sound, Invader Sound ..... *J*
Oscillator: UFO Hit Sound, Invader Sound, Player Fire Sound ..... *K*
Oscillator: Bomb Sound, Warning Sound ..... *L*
Oscillator: Bucket Brigade Device (BBD) Amplifier Circuit, Power Connections ..... *M*
Oscillator: Explosion Sound, Rocket Sound, Word (Character) Sound, Front-Back BBD Main Amplifier ..... *N*
Switching Regulator ..... *O*

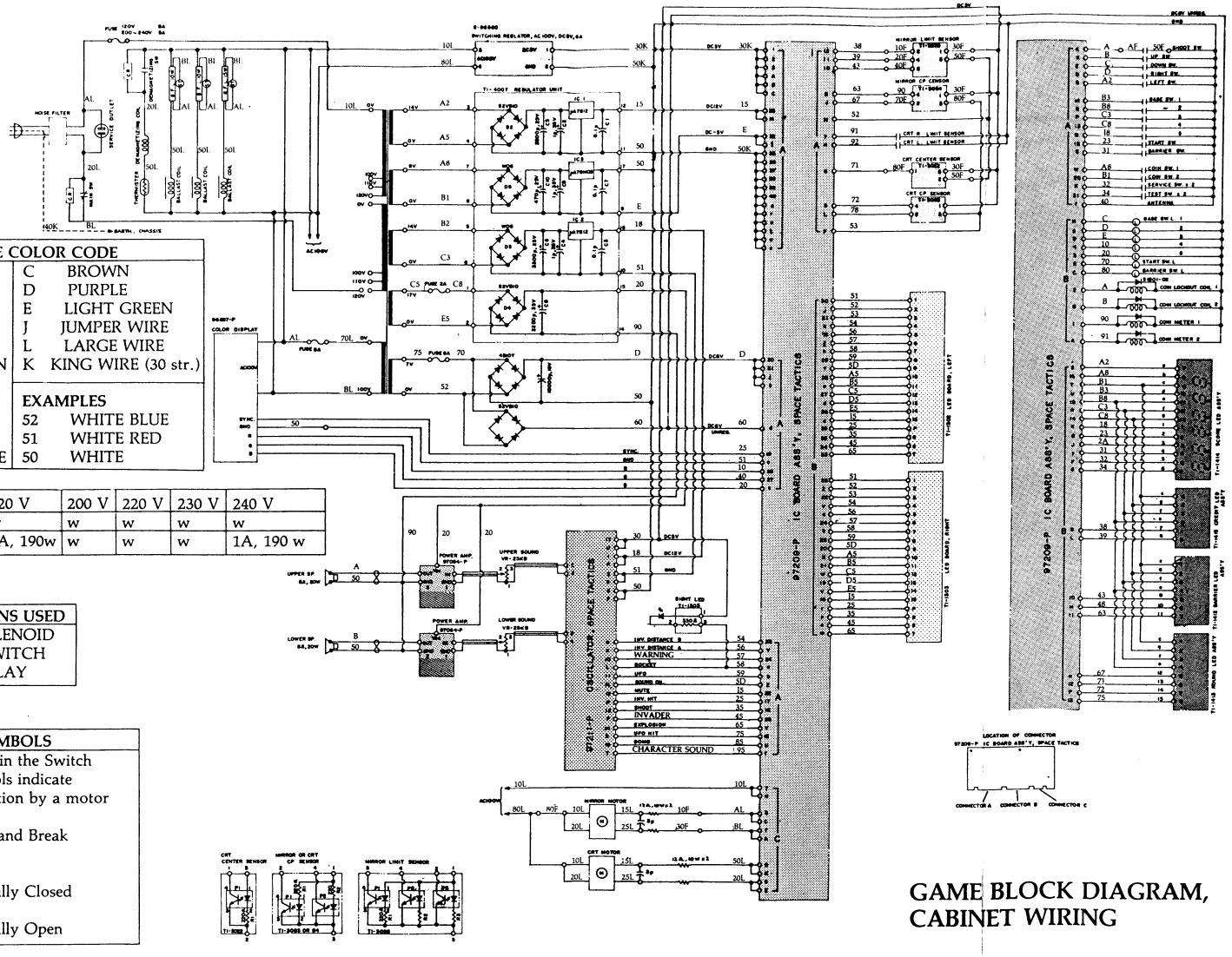

WIRE COLOR CODE			
1	RED	C	BROWN
2	BLUE	D	PURPLE
3	YELLOW	E	LIGHT GREEN
4	GREEN	J	JUMPER WIRE
5	WHITE	L	LARGE WIRE
6	MAROON	K	KING WIRE (30 str.)
7	ORANGE		
8	BLACK	**EXAMPLES**	
9	GRAY	52	WHITE BLUE
A	PINK	51	WHITE RED
B	SKY BLUE	50	WHITE

VOLTAGE	120 V	200 V	220 V	230 V	240 V
STAND-BY	w	w	w	w	w
MAXIMUM	2A, 190w	w	w	w	1A, 190 w

ABBREVIATIONS USED	
SOL.	SOLENOID
SW.	SWITCH
RE.	RELAY

SWITCH SYMBOLS	
⊕	Circle in the Switch Symbols indicate Operation by a motor
⫞⫟	Make and Break Switch
⫞	Normally Closed
⫟	Normally Open

GAME BLOCK DIAGRAM, CABINET WIRING

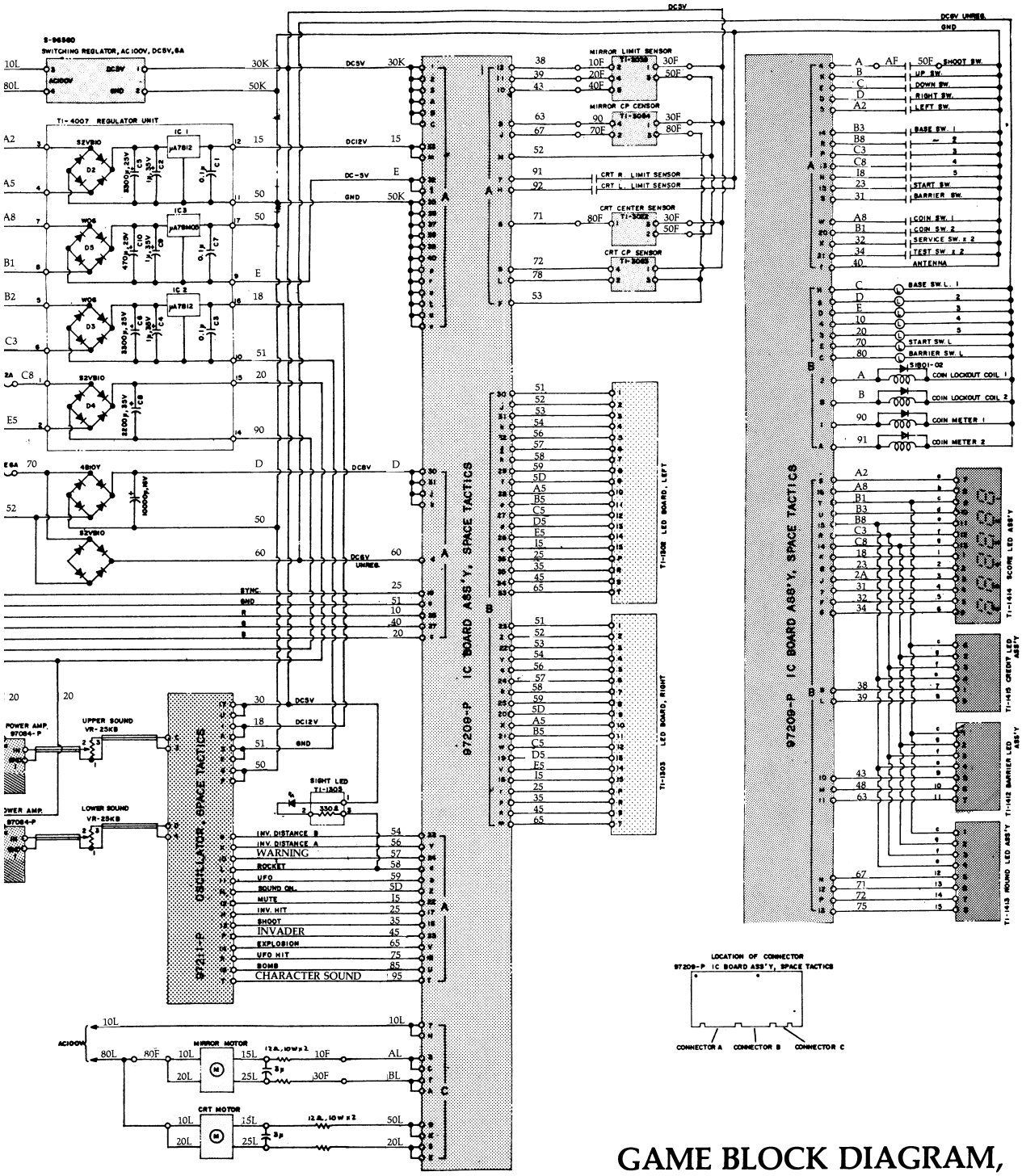

GAME BLOCK DIAGRAM, CABINET WIRING

CPU

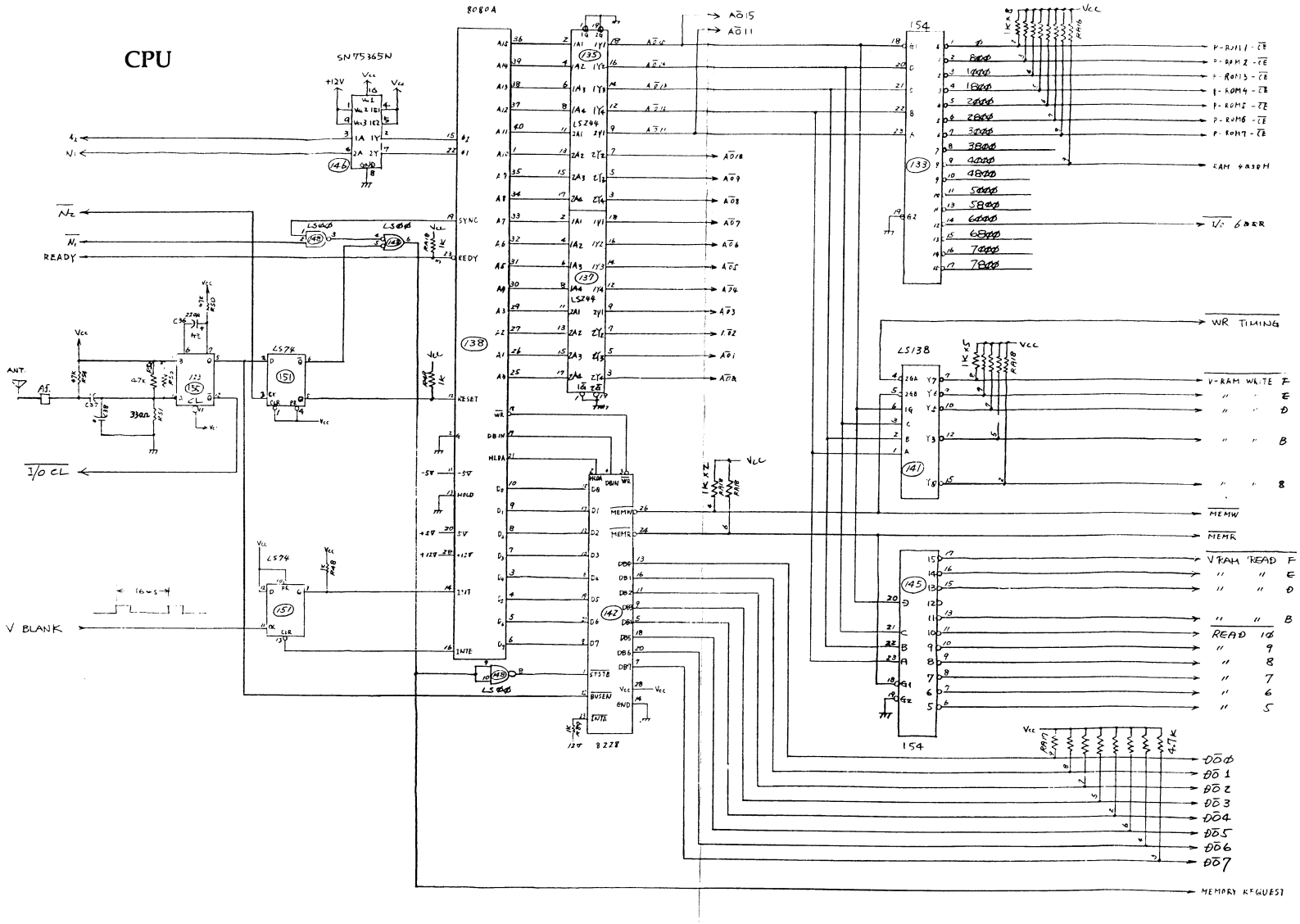

8080A
SN75365N
LS244
LS74
LS138
154
8228
READY
I/O CL
V BLANK
WR TIMING
V-RAM WRITE F
MEMW
MEMR
V RAM READ F
READ 10
MEMORY REQUEST

VIDEO RAM PAGE B

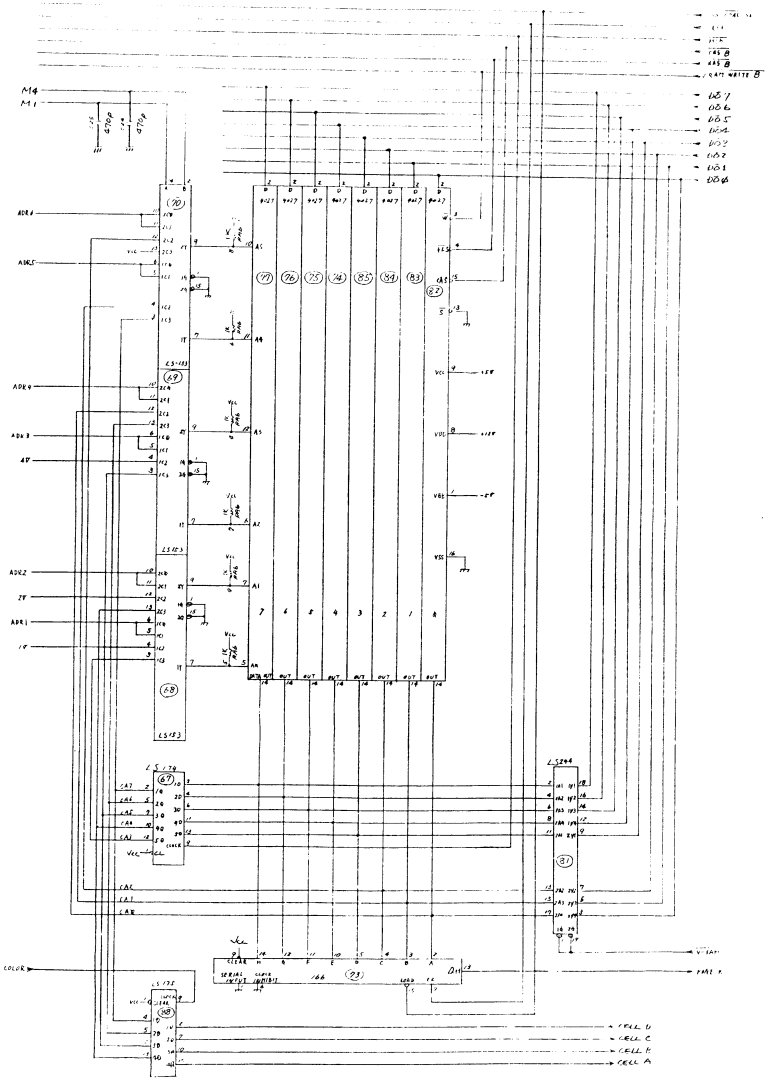

VIDEO RAM PAGE D

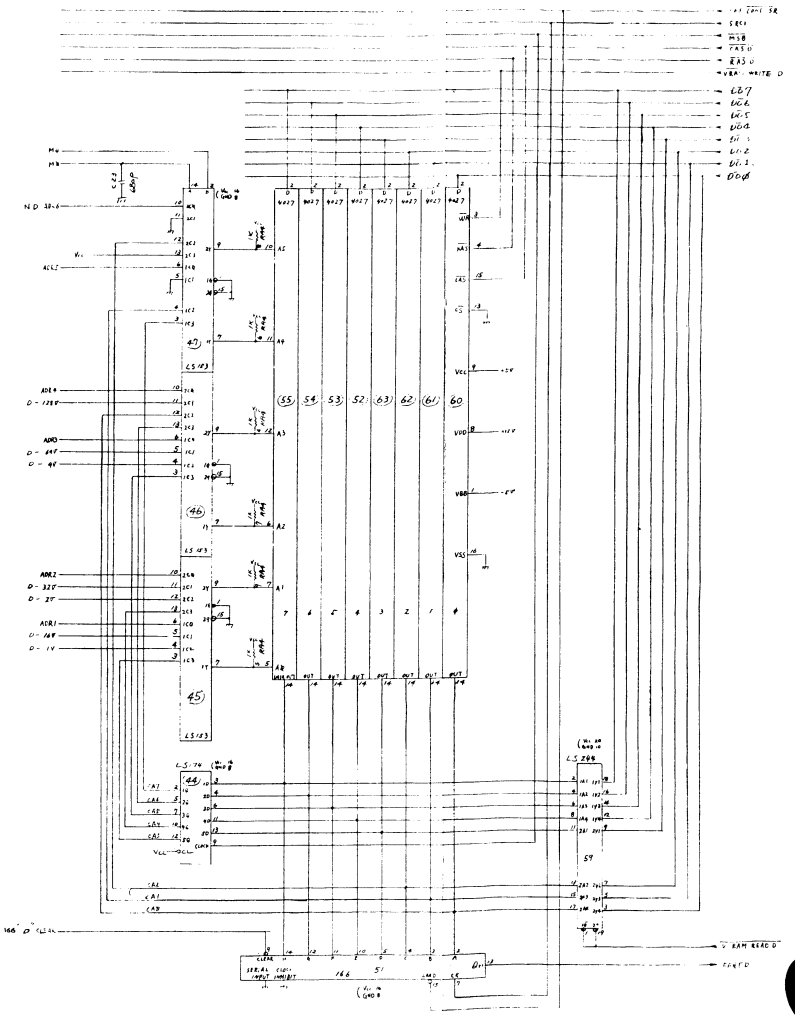

C

VIDEO RAM PAGE E

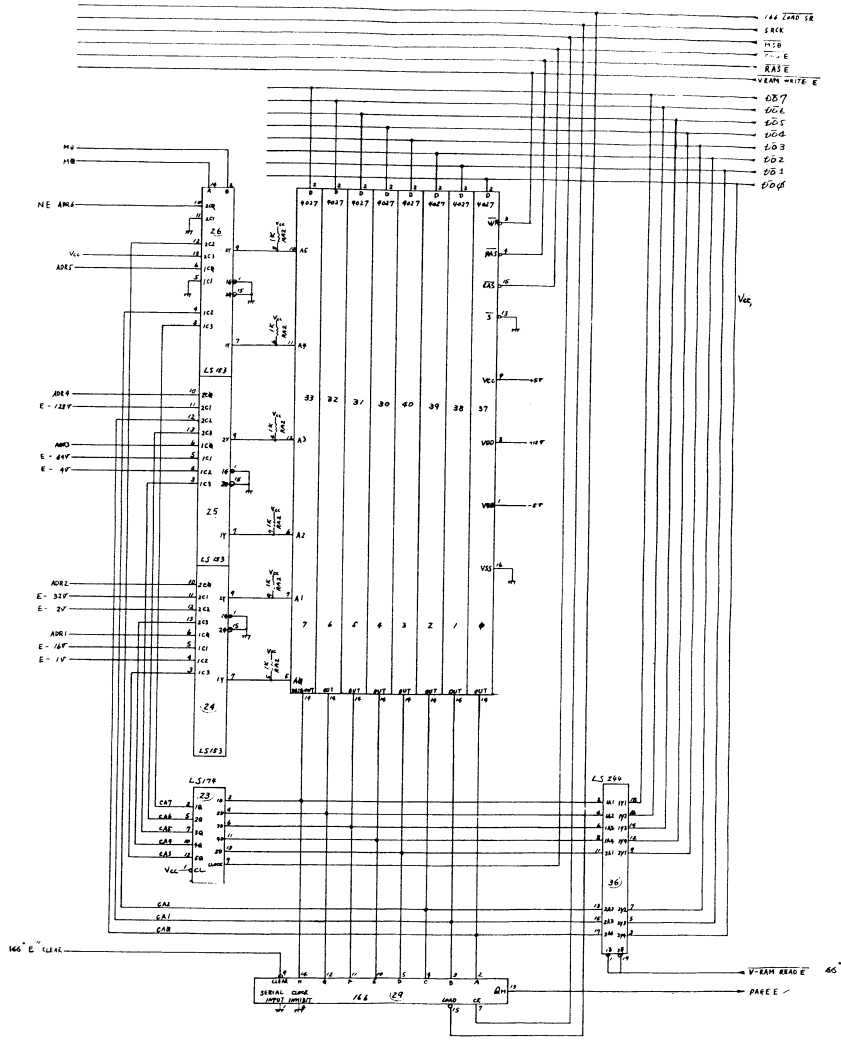

VIDEO RAM PAGE F

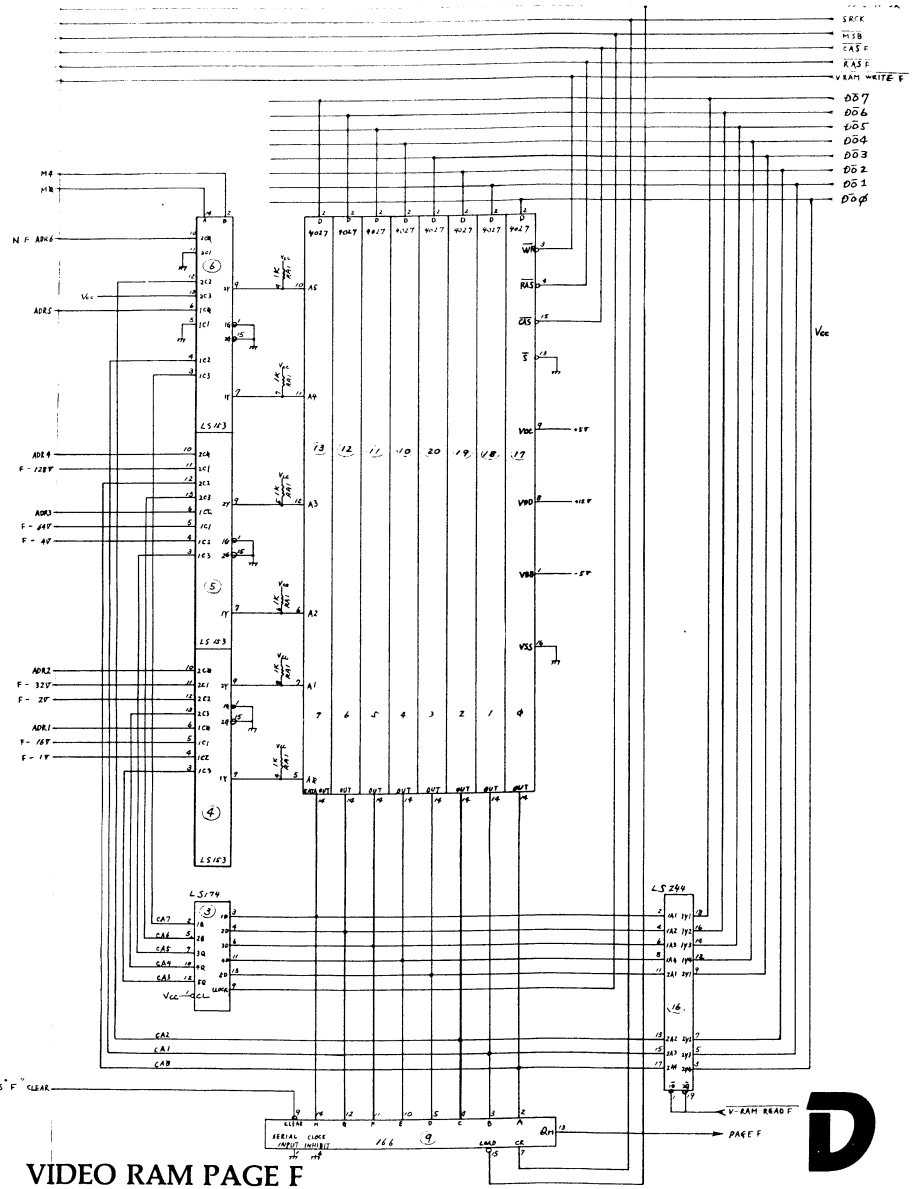

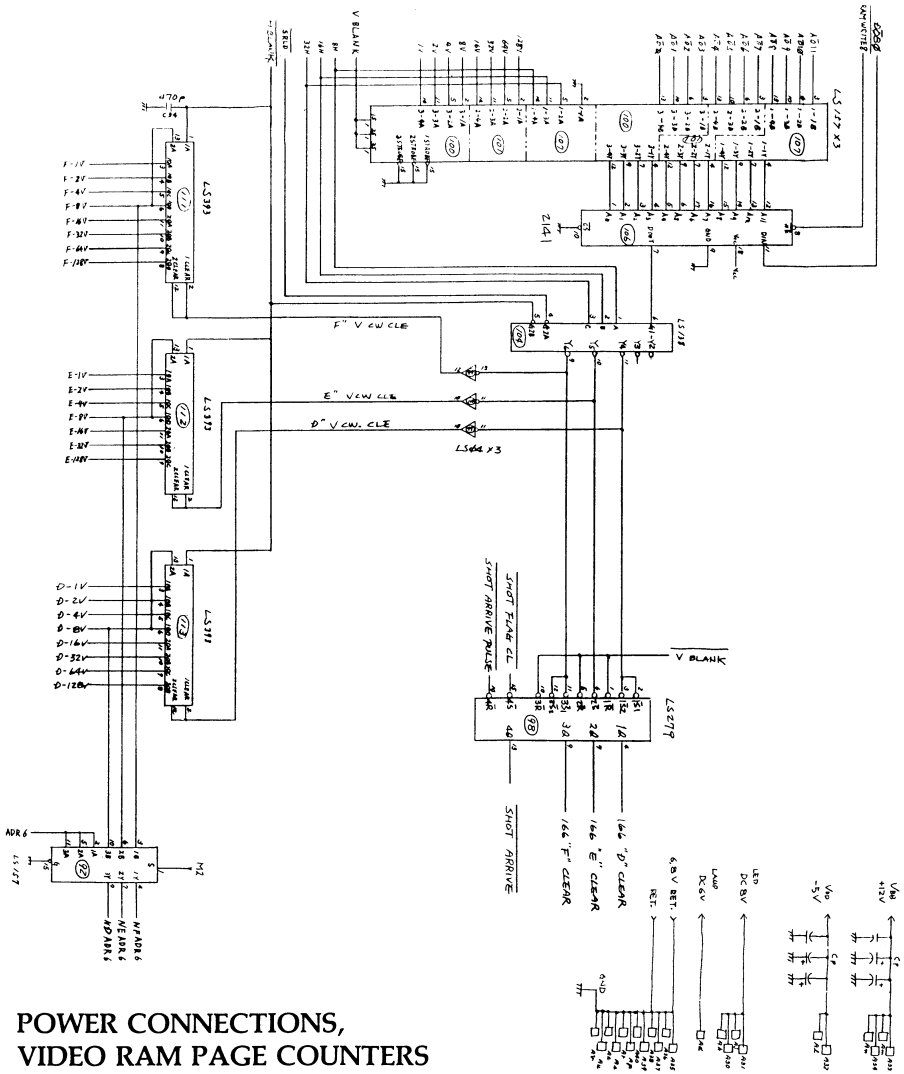

POWER CONNECTIONS,
VIDEO RAM PAGE COUNTERS

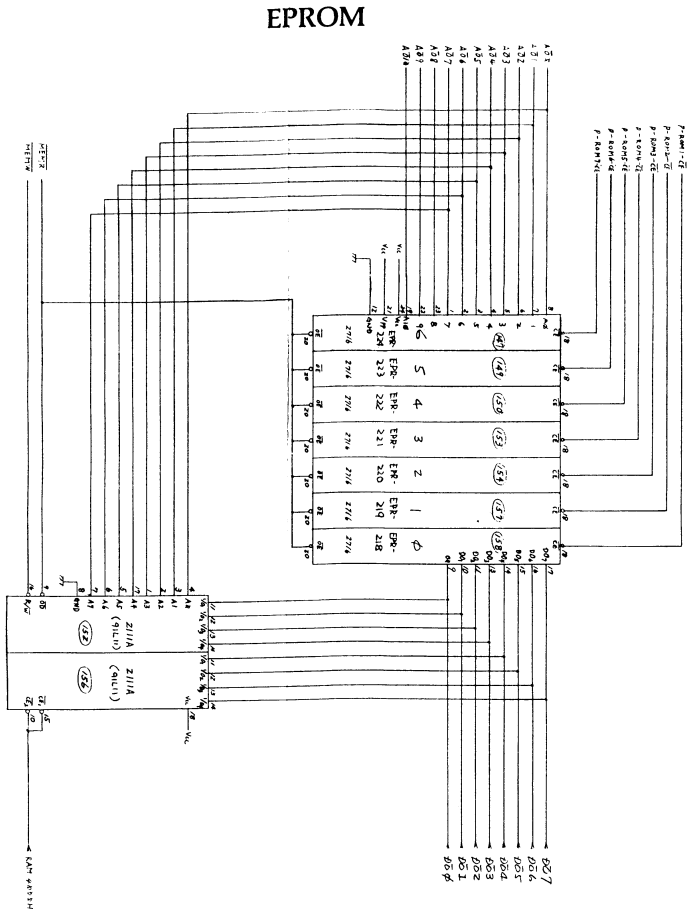

EPROM

E

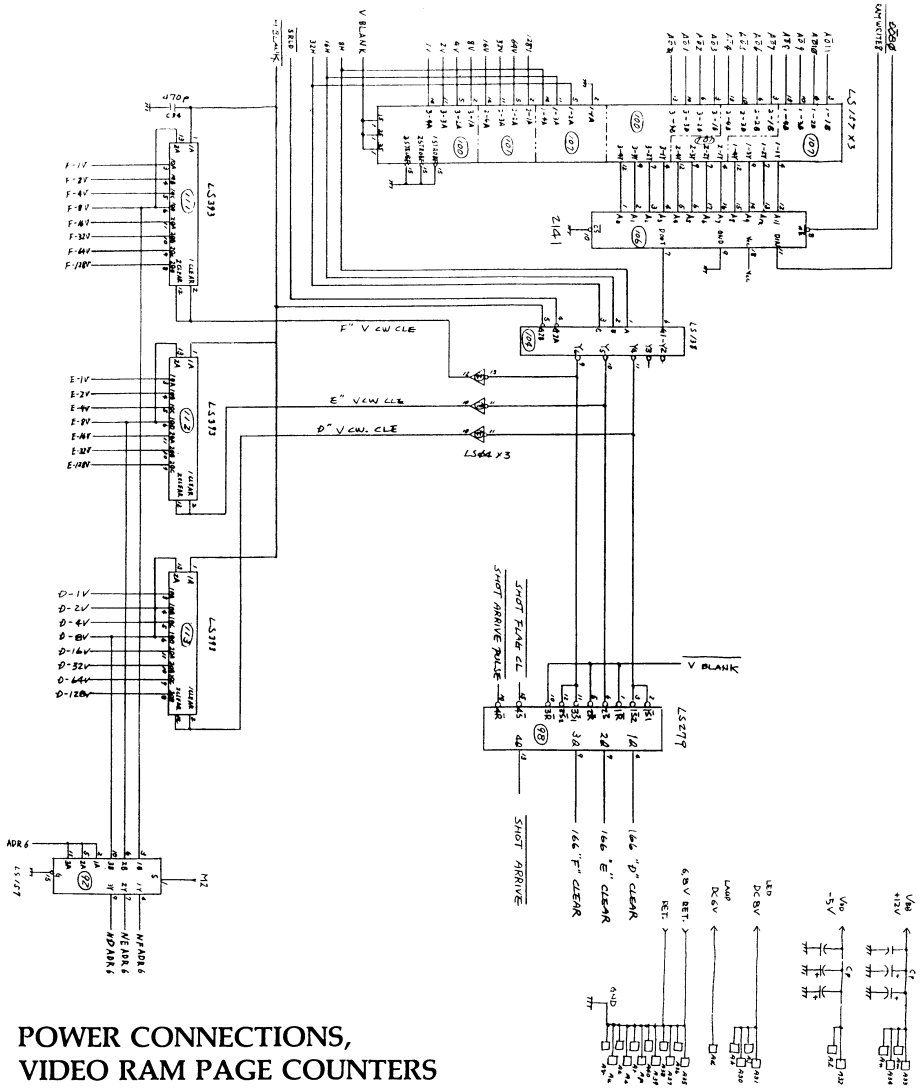

POWER CONNECTIONS,
VIDEO RAM PAGE COUNTERS

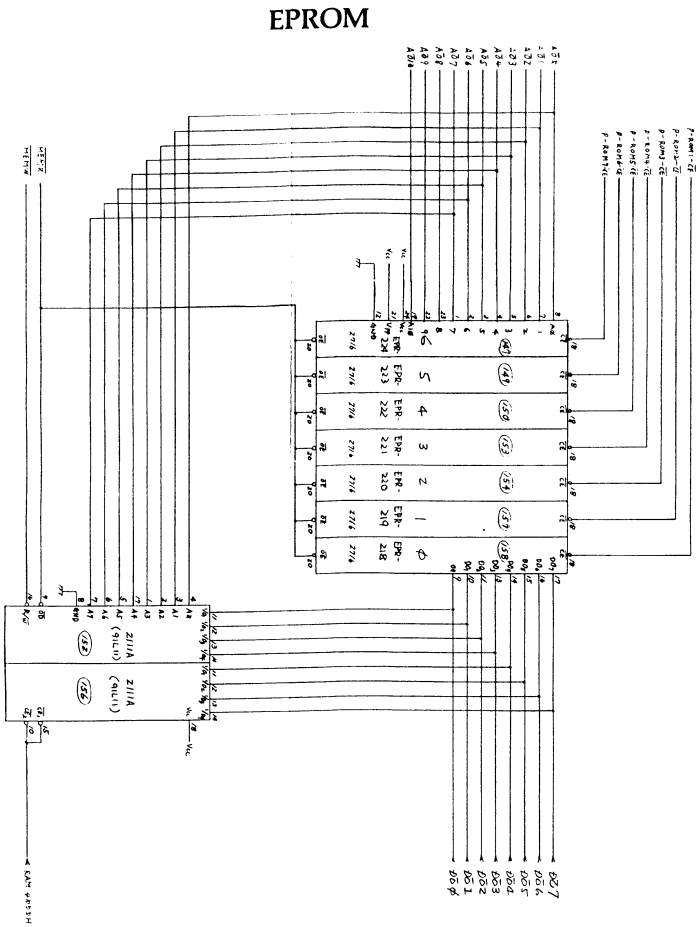

EPROM

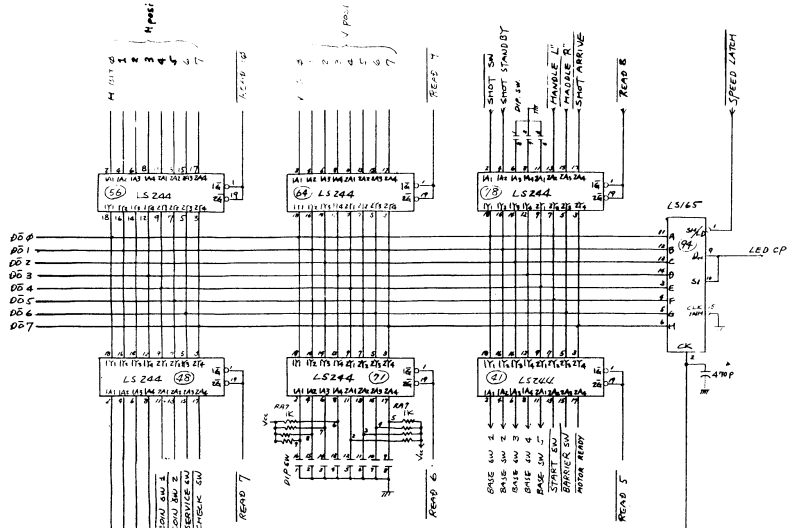

VIDEO GENERATION, INPUT BUFFERS, DIP SWITCH #1

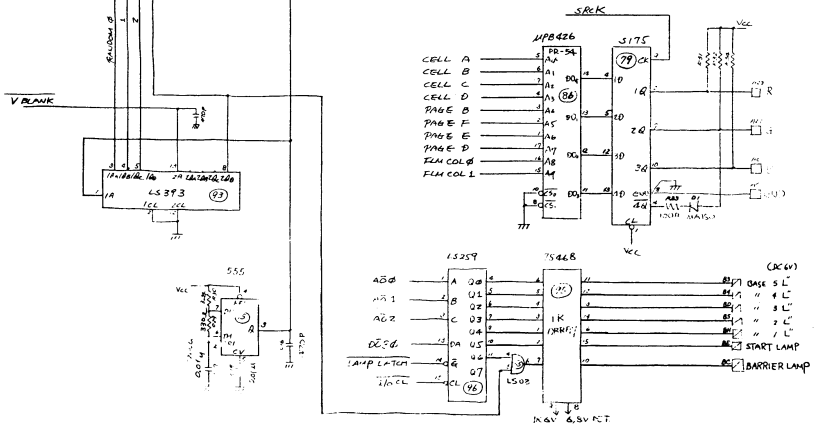

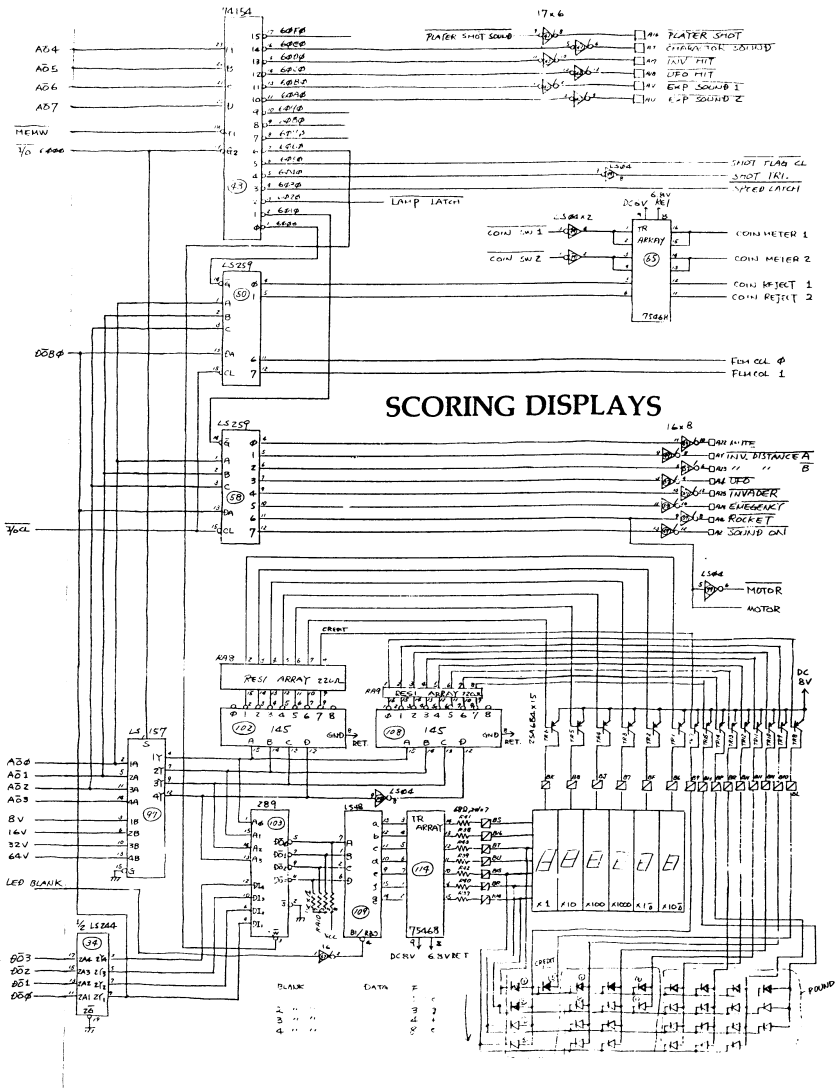

SCORING DISPLAYS

F

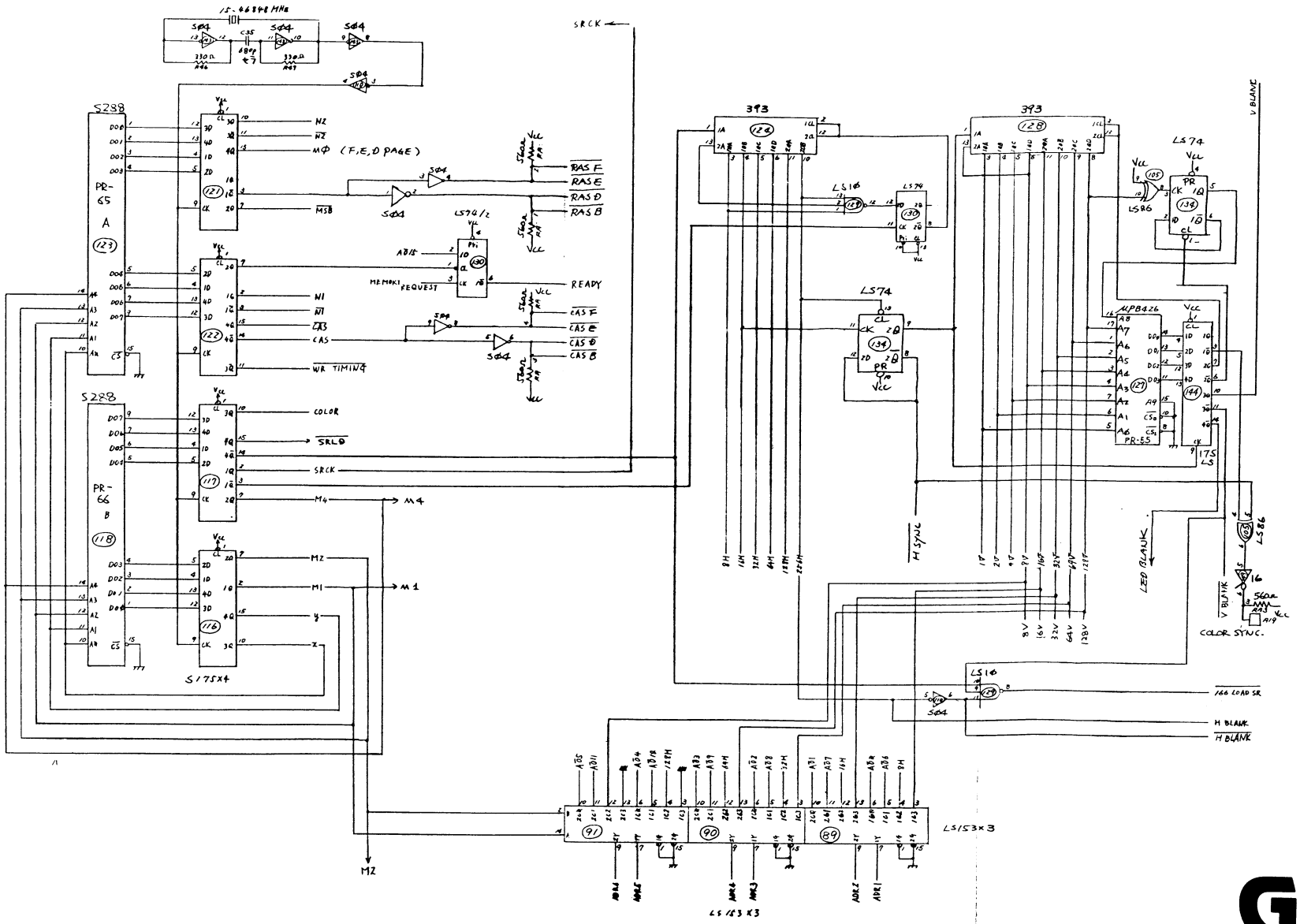

MASTER CLOCK: TIMING CIRCUIT

G

PLAYER CONTROLS: STEERING, PHOTO SENSORS, MOTOR DRIVE

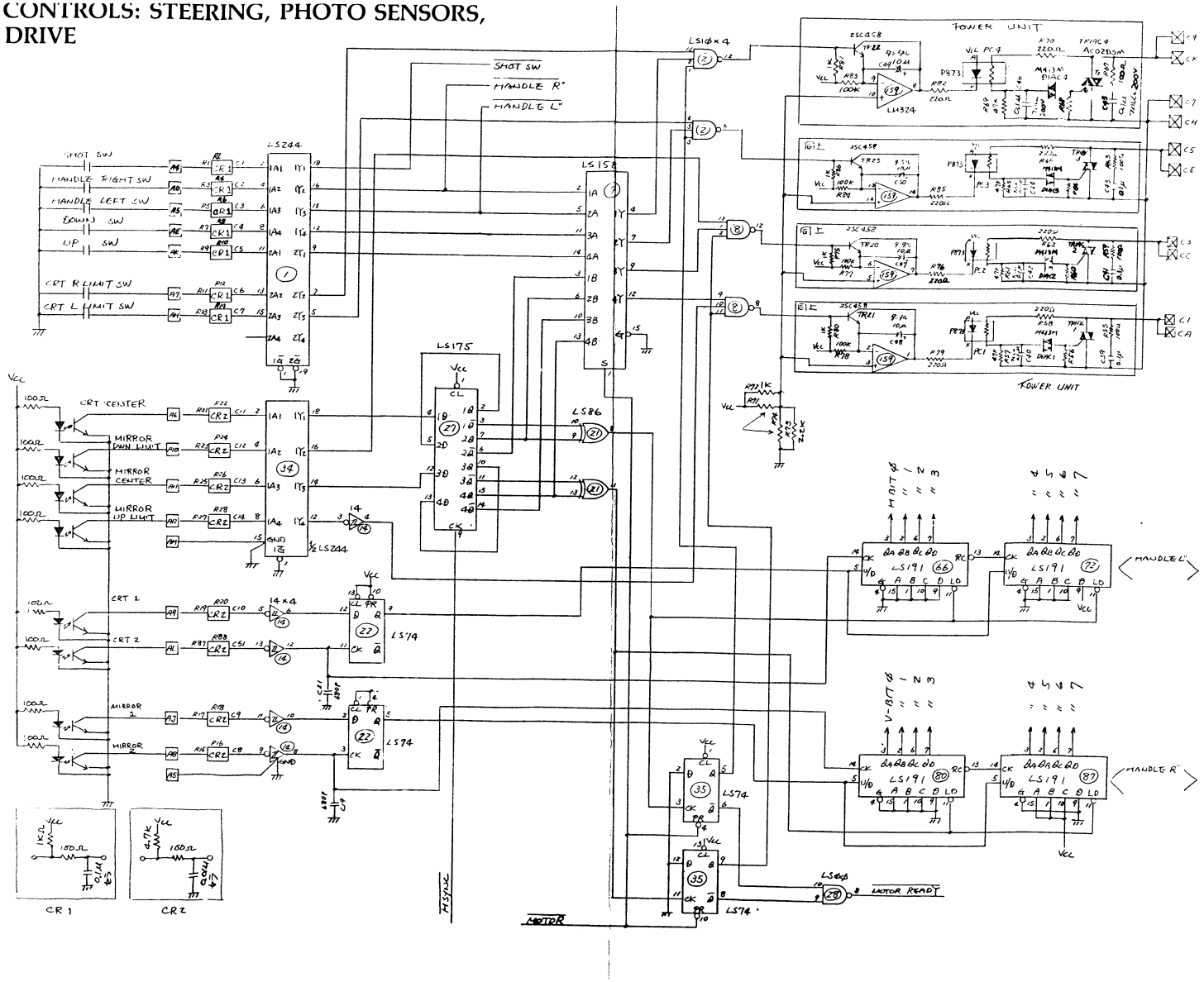

H

PLAYER CONTROLS: FRONT PANEL SWITCHES

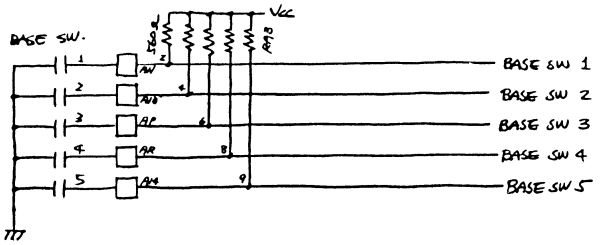

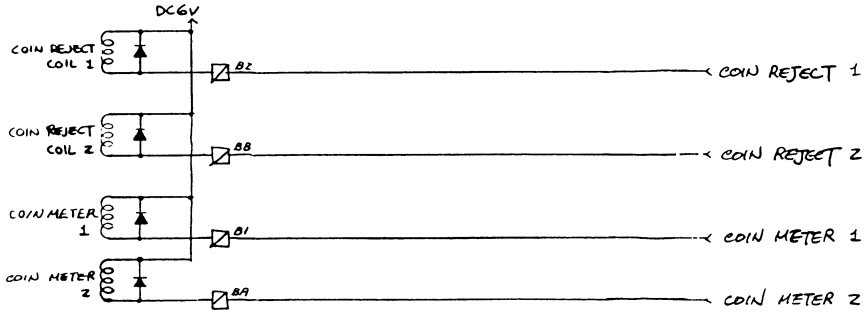

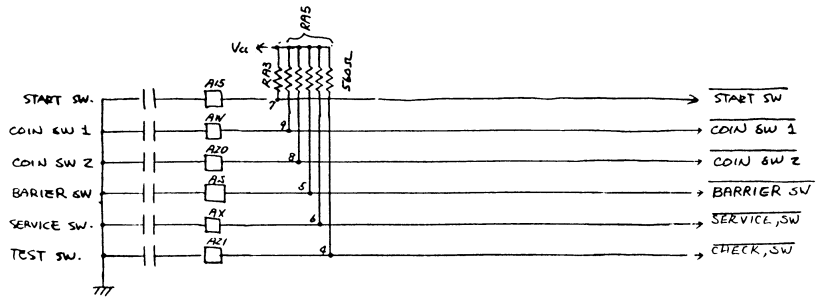

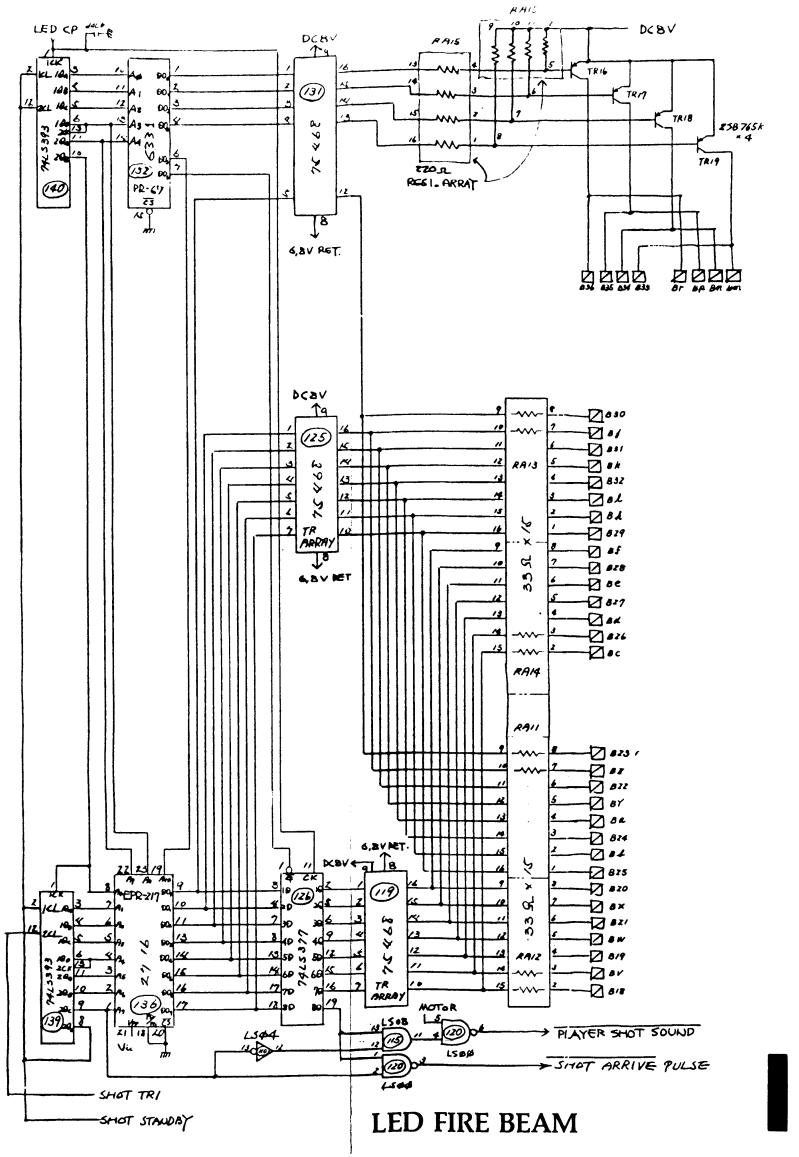

LED FIRE BEAM

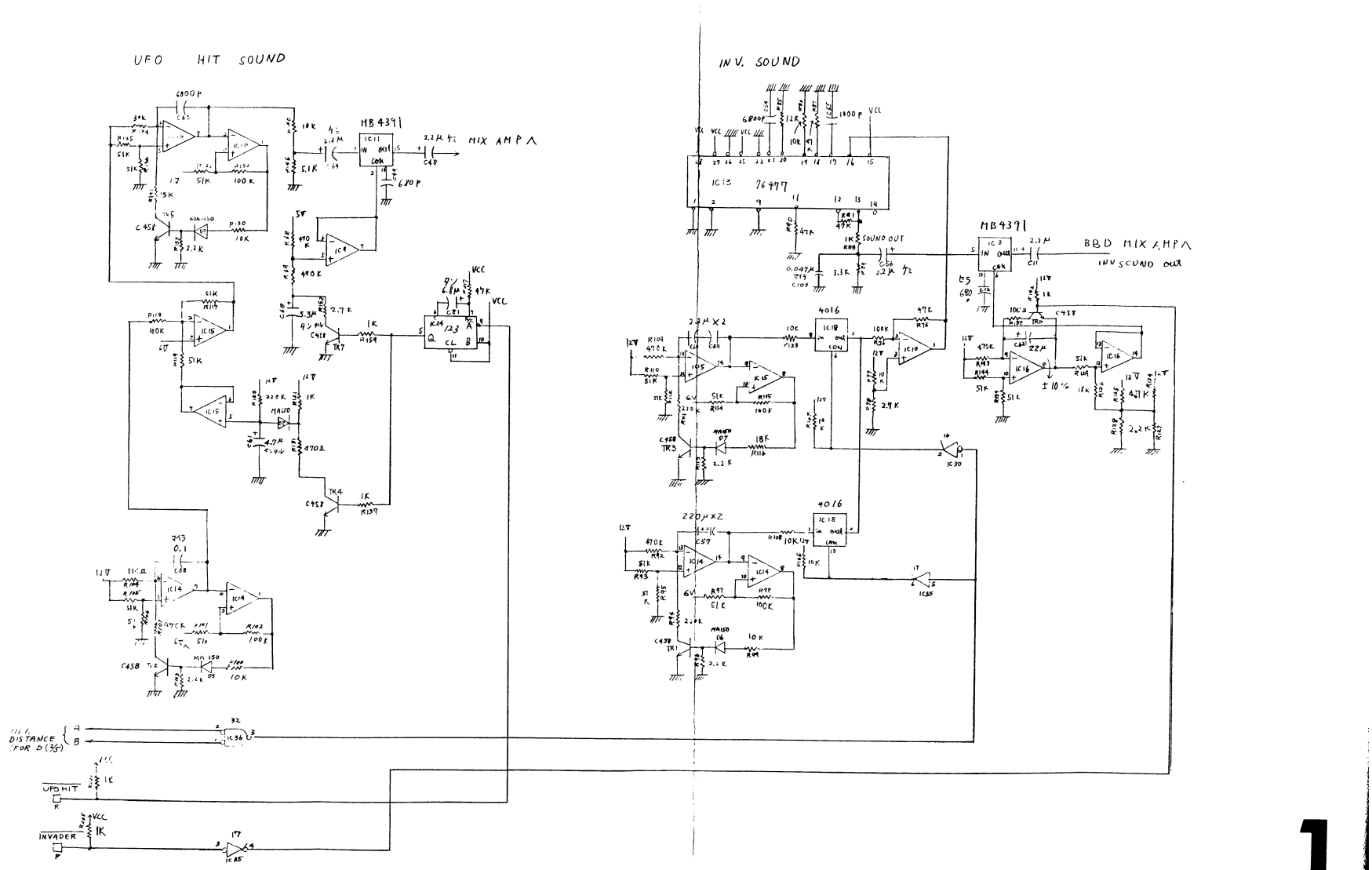

OSCILLATOR: UFO HIT SOUND, INVADER SOUND

J

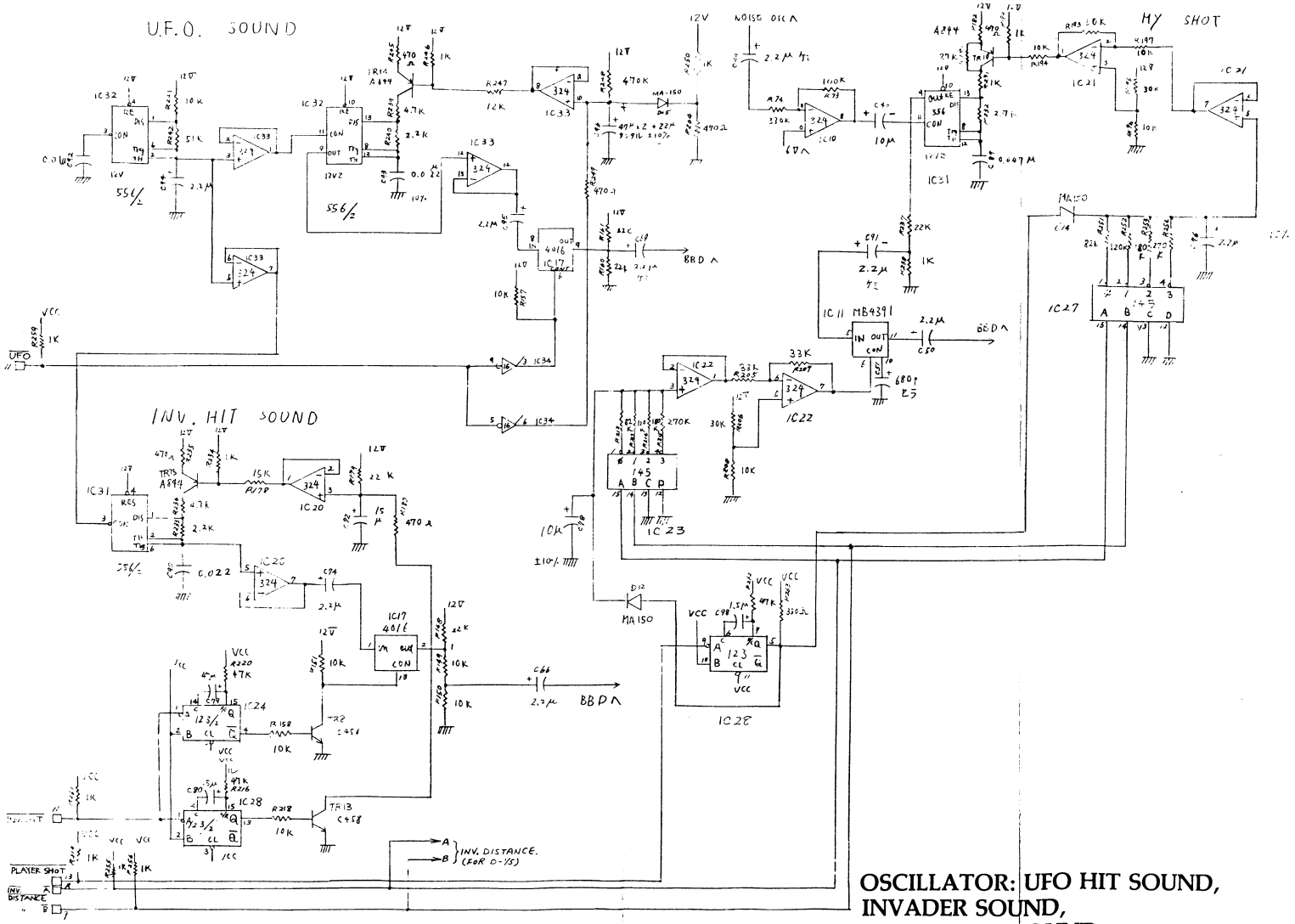

OSCILLATOR: UFO HIT SOUND, INVADER SOUND, PLAYER FIRE SOUND

K

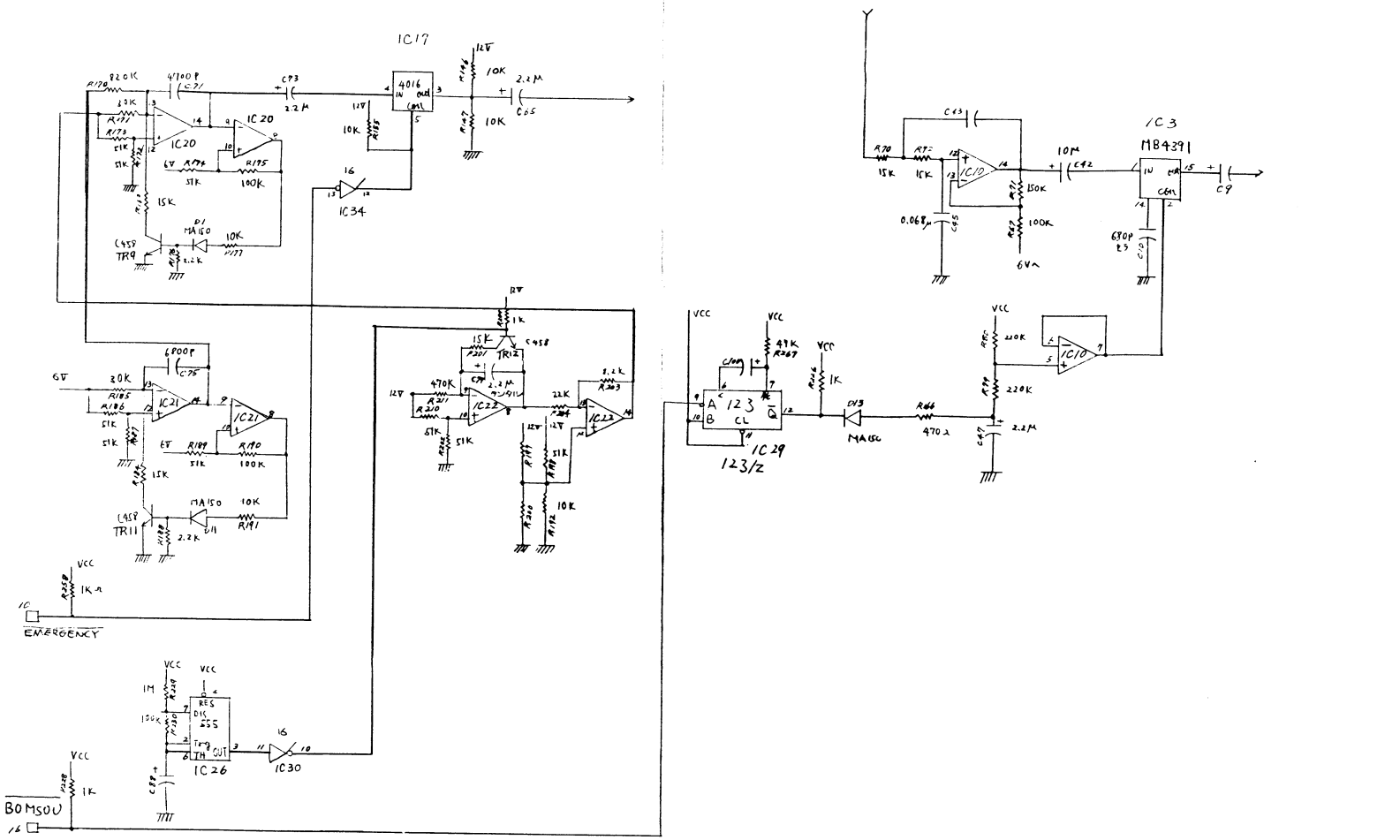

OSCILLATOR: BOMB SOUND, WARNING SIGNAL

L

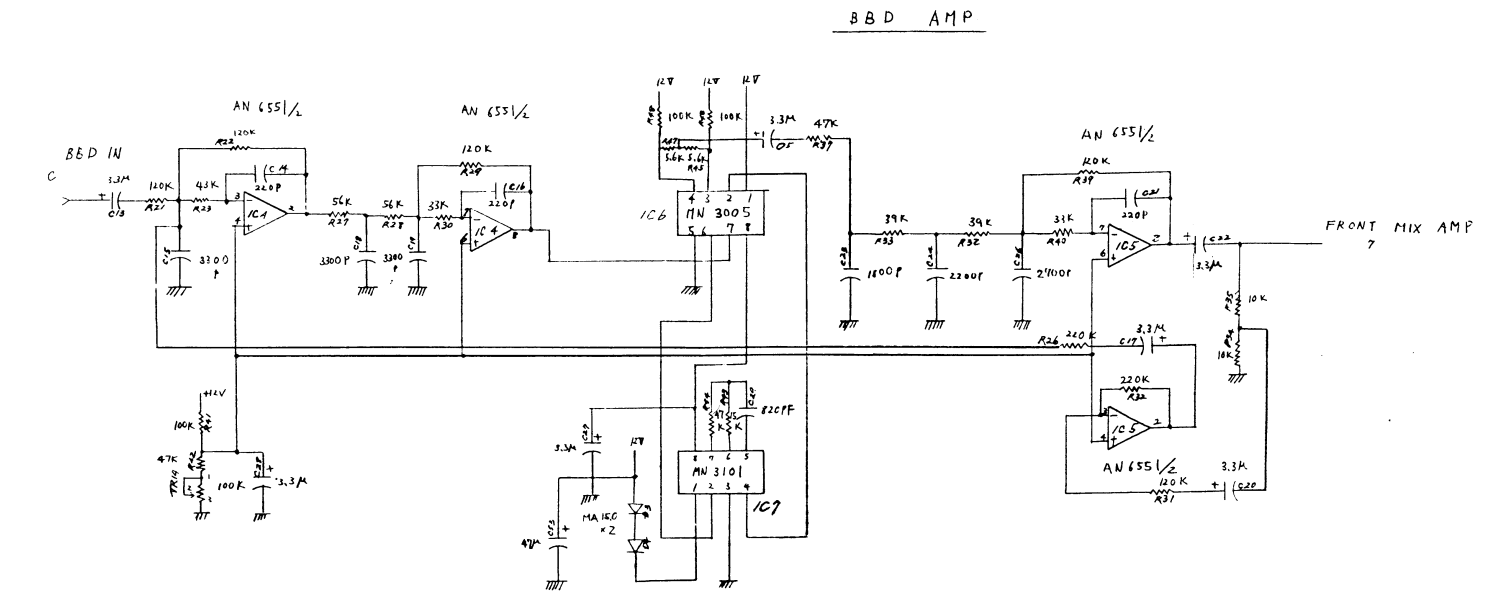

OSCILLATOR: BUCKET BRIGADE DEVICE (BBD) AMPLIFIER CIRCUIT, POWER CONNECTIONS

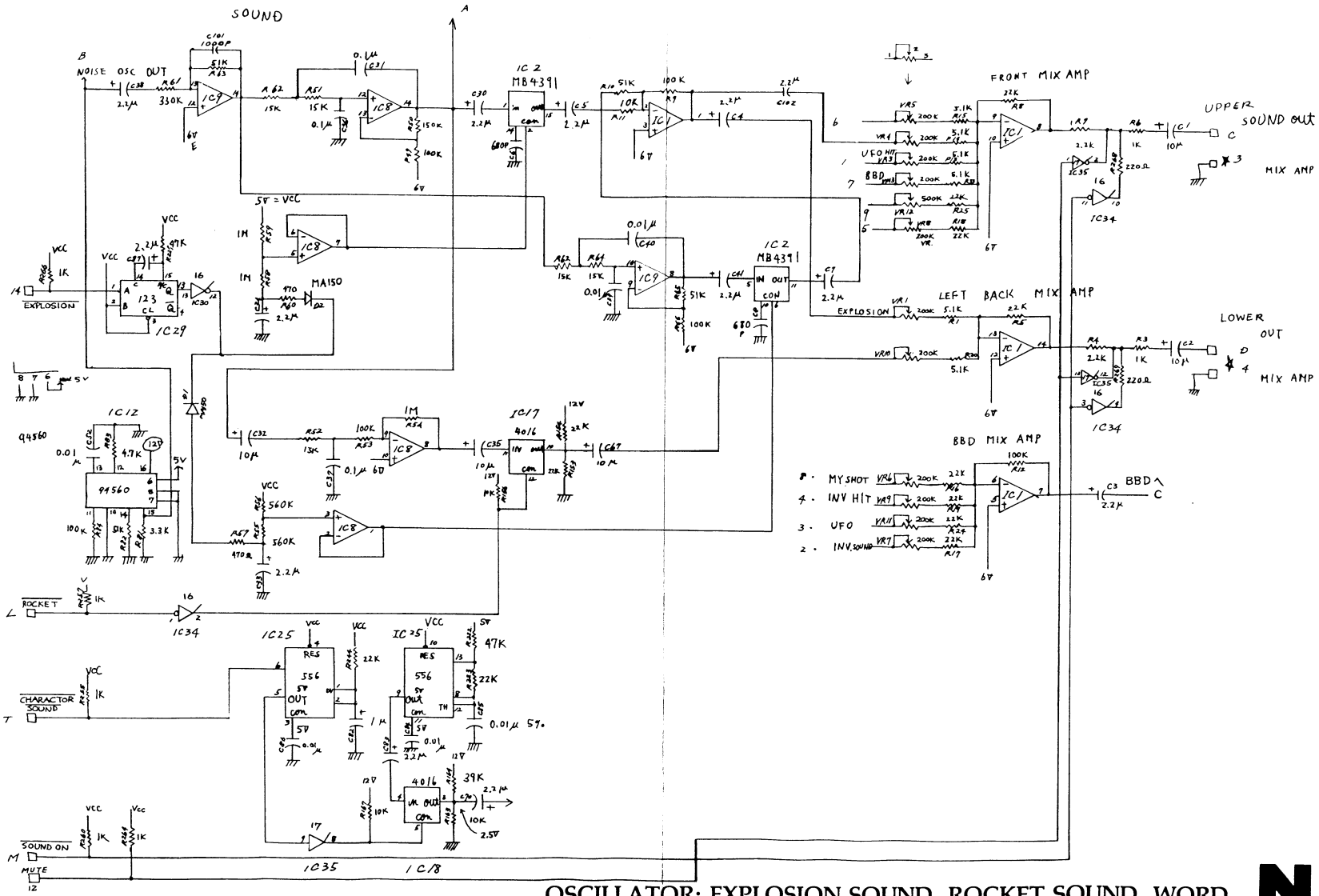

OSCILLATOR: EXPLOSION SOUND, ROCKET SOUND, WORD (CHARACTER) SOUND, FRONT-BACK BBD MAIN AMPLIFIER

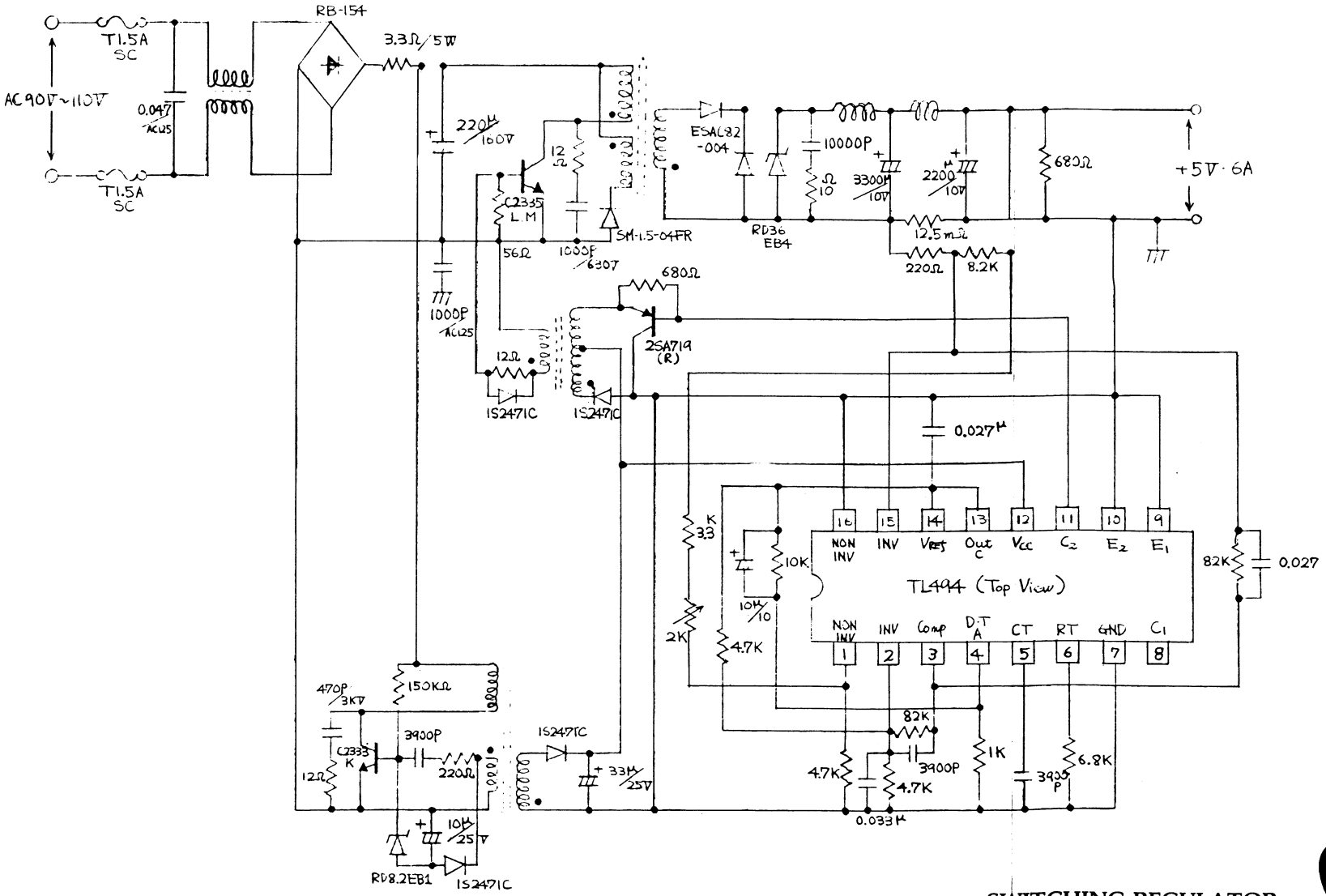

SWITCHING REGULATOR

0