MARVIN'S MAZE

CONVERSION KIT

INSTRUCTION MANUAL

SNK ELECTRONICS CORP.
3043 KASHIWA STREET,
TORRANCE, CALIF. 90505
Phone: (213) 539-2744
TLX: 182426 SNK CORP.

PARTS LAYOUT & NUMBER OF ROM

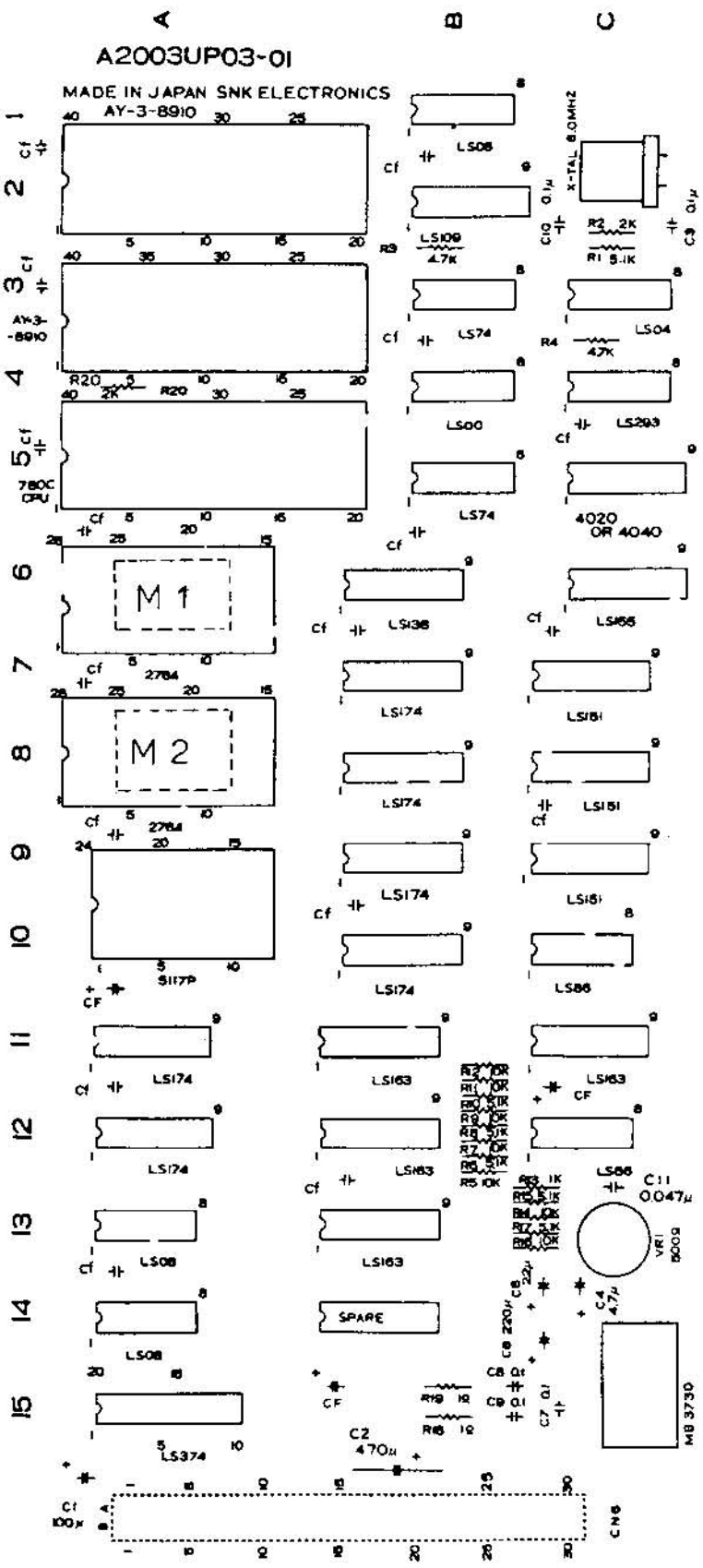

PARTS LAYOUT

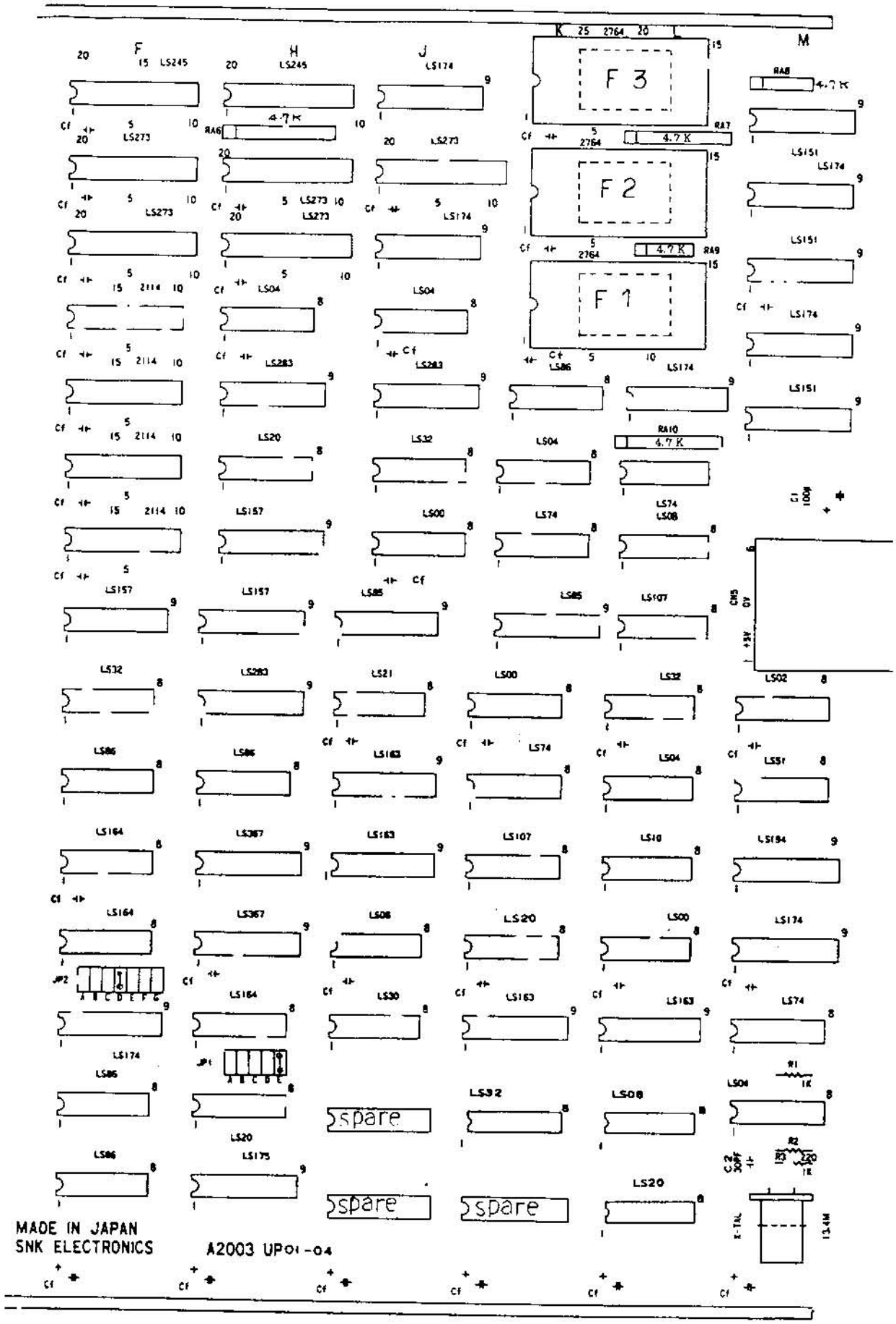
F
H
J
K
L
M
F 3
F 2
F 1
LS245
LS174
LS273
LS151
LS04
LS283
LS86
LS20
LS32
LS157
LS00
LS74
LS08
LS85
LS107
LS02
LS51
LS164
LS367
LS163
LS194
LS30
LS175
RA6
RA7
RA8
RA9
RA10
4.7K
2764
2114
JP2
JP1
spare
spare
spare
R1
R2
R3
C1
C2
CN5
X-TAL
13.4M
MADE IN JAPAN
SNK ELECTRONICS
A2003 UP01-04

PARTS LAYOUT & NUMBER OF ROM

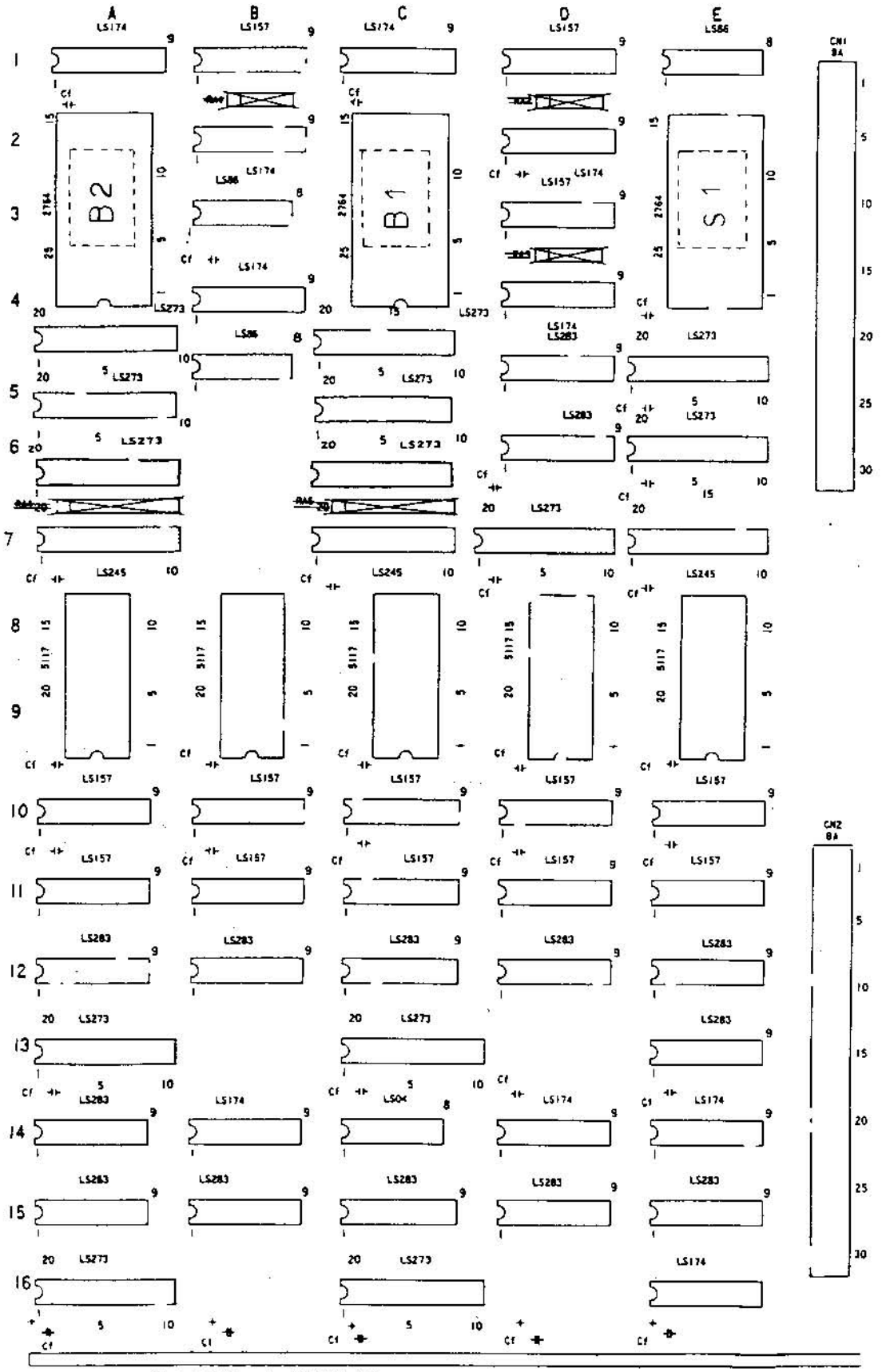

PARTS LAYOUT

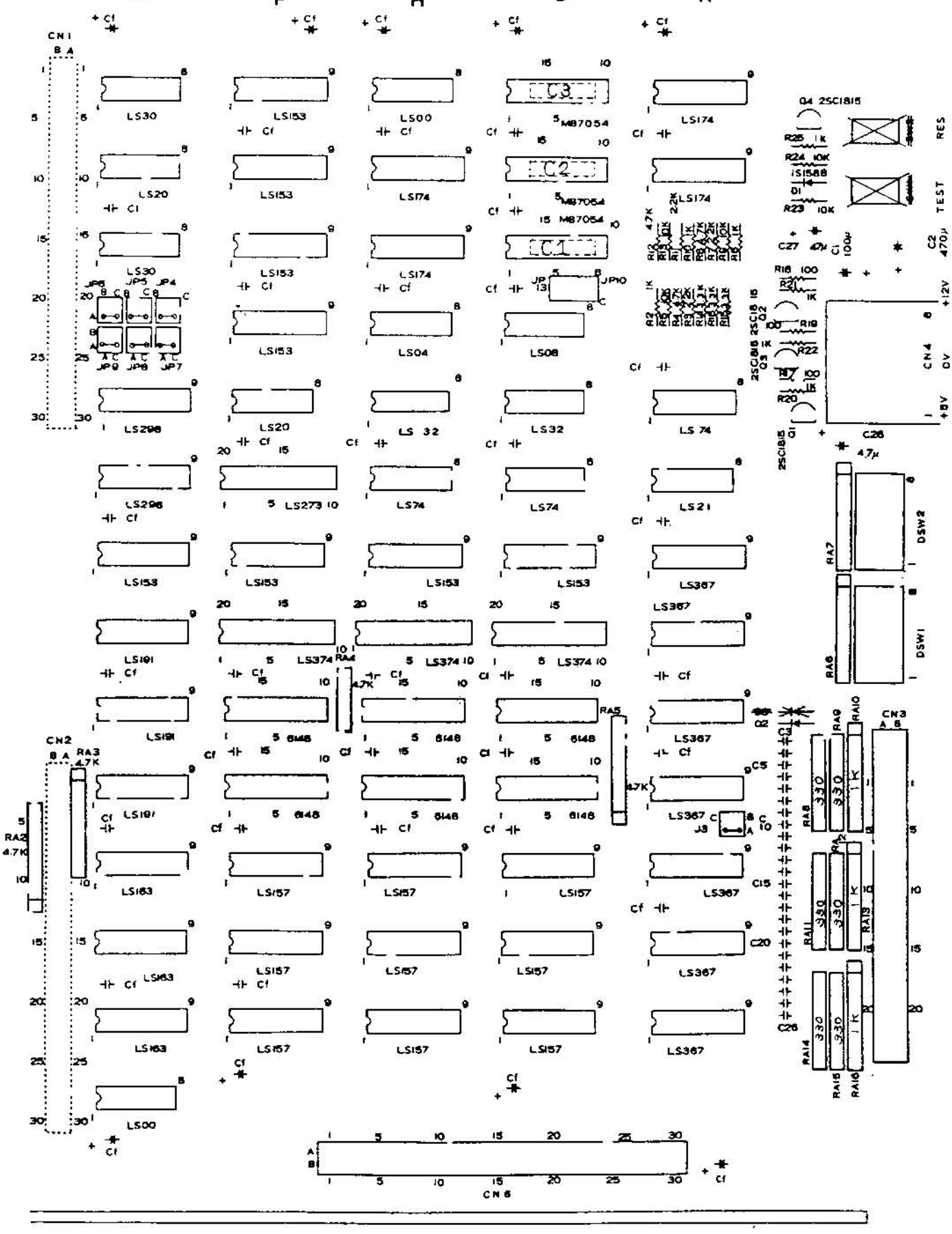
E
F
H
J
K
CN1
CN2
CN3
CN4
CN6
RES
TEST
DSW1
DSW2
LS30
LS153
LS00
LS174
LS20
LS174
LS298
LS20
LS 32
LS32
LS 74
LS298
LS273
LS74
LS74
LS21
LS153
LS153
LS153
LS153
LS367
LS191
LS374
LS374
LS374
LS191
6148
6148
6148
LS367
LS191
6148
6148
6148
LS367
LS163
LS157
LS157
LS157
LS367
LS163
LS157
LS157
LS157
LS367
LS163
LS157
LS157
LS157
LS367
LS00
M87054
M87054
M87054
Q4 2SC1815
R25 1k
R24 10K
1S1588
R23 10K
C27 47μ
C1 100μ
C2 470μ
R18 100
R21 1K
R19
R22
R17 100
R20 1K
C26 4.7μ
+12V
0V
+5V
RA7
RA6
RA8
RA9
RA10
RA11
RA13
RA14
RA15
RA16
RA5
RA4
RA3 4.7K
RA2 4.7K
330
1K
C3
C2
C1
C5
C15
C20
C26
JP6
JP5
JP4
JP9
JP8
JP7
JP13
JP10
J3

PARTS LAYOUT & NUMBER OF ROM

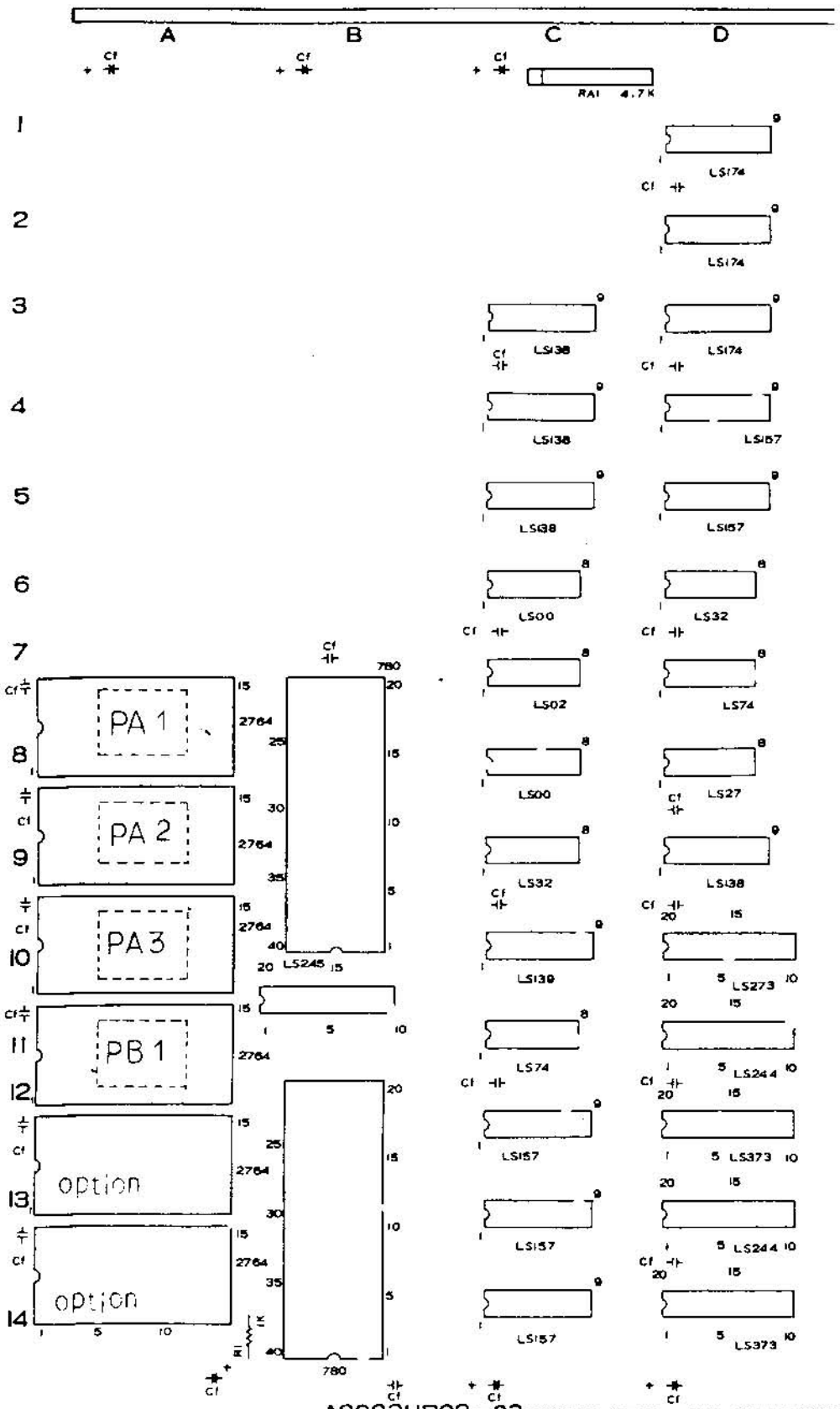

PARTS LAYOUT

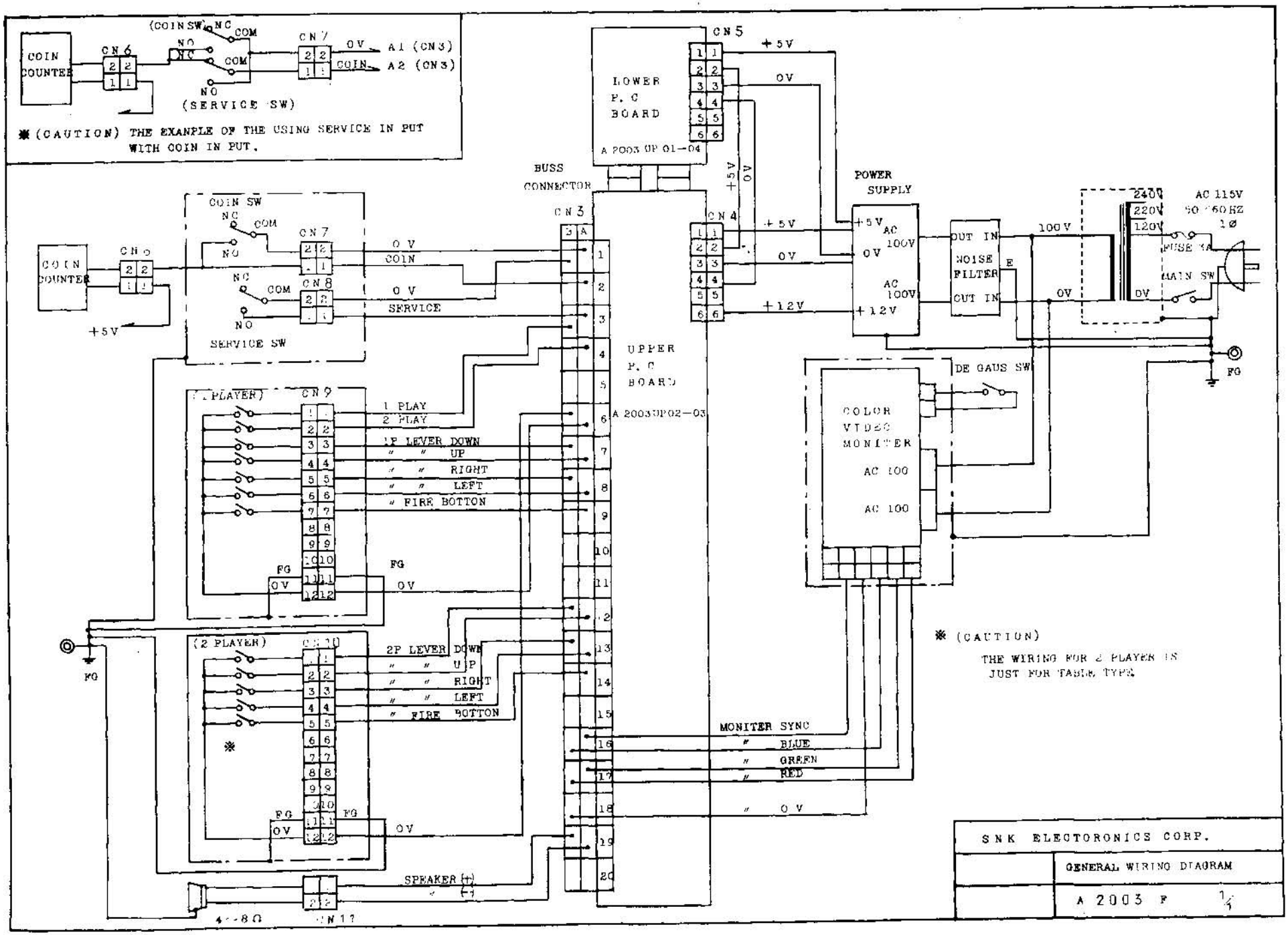

SNK ELECTORONICS CORP.	
	GENERAL WIRING DIAGRAM
	A 2003 F 1/1

1 DC POWER SUPPLY CONNECTOR (VHR — 6N)

CN4

PIN	SIGNAL	
1	+5V	RED
2	+5V	〃
3	0V	BLACK
4	0V	〃
5	NC	
6	+12V	YELLOW

CN5

PIN	SIGNAL	
1	+5V	RED
2	+5V	〃
3	0V	BLACK
4	0V	〃
5	NC	
6	NC	

2 SIGNAL CONNECTOR (PS — D4C — 40 : JAE)

CN3

PIN	SIGNAL		PIN	SIGNAL	
A 1	0V		B 1	0V	
2	COIN		2	NC	
3	SERVICE SW	NOTE 1	3	1 PLAYER SELECT	
4	2 PLAYER SELECT		4	NC	
5	NC		5	NC	
6	0V		6	0V	
7	1 PLAY UP		7	1 PLAY DOWN	
8	〃 LEFT		8	〃 RIGHT	
9	〃 FIRE		9	〃 PUSH 2	NOTE 3
10	NC		10	NC	
11	NC		11	NC	
12	2 PLAY UP	NOTE 2	12	2 PLAY DOWN	NOTE 2
13	〃 LEFT	〃	13	〃 RIGHT	〃
14	〃 FIRE	〃	14	〃 PUSH 2	NOTE 3
15	NC		15	NC	
16	VIDEO SYNC		16	VIDEO BLUE	
17	〃 GREEN		17	〃 RED	
18	NC		18	〃 0V	
19	SPEAKER (−)		19	SPEAKER (+)	
20	NC		20	NC	

(NOTE 1) COIN INPUT CAN BE USED FOR SERVICE INPUT.
REFER TO WIRING DIAGRAM (A2003F).

(NOTE 2) THE WIRING FOR 2 — PLAYER IS JUST FOR TABLE — TYPE.

(NOTE 3) 1 PLAY PUSH 2
2 PLAY PUSH 2 —— EXTRA FOR THE FUTURE GAMES.

(NOTE 4) DO NOT USE EMPTY PINS.

(NOTE 5) THE SPECIFICATION ON COIN COUNTER IS +5V POWER USED ONLY.
THE CALCULATING SPEED 600 COUNTS/M. (duty 50%)

APPR	CHECK	ORG	SNK ELECTRONICS	No
				/

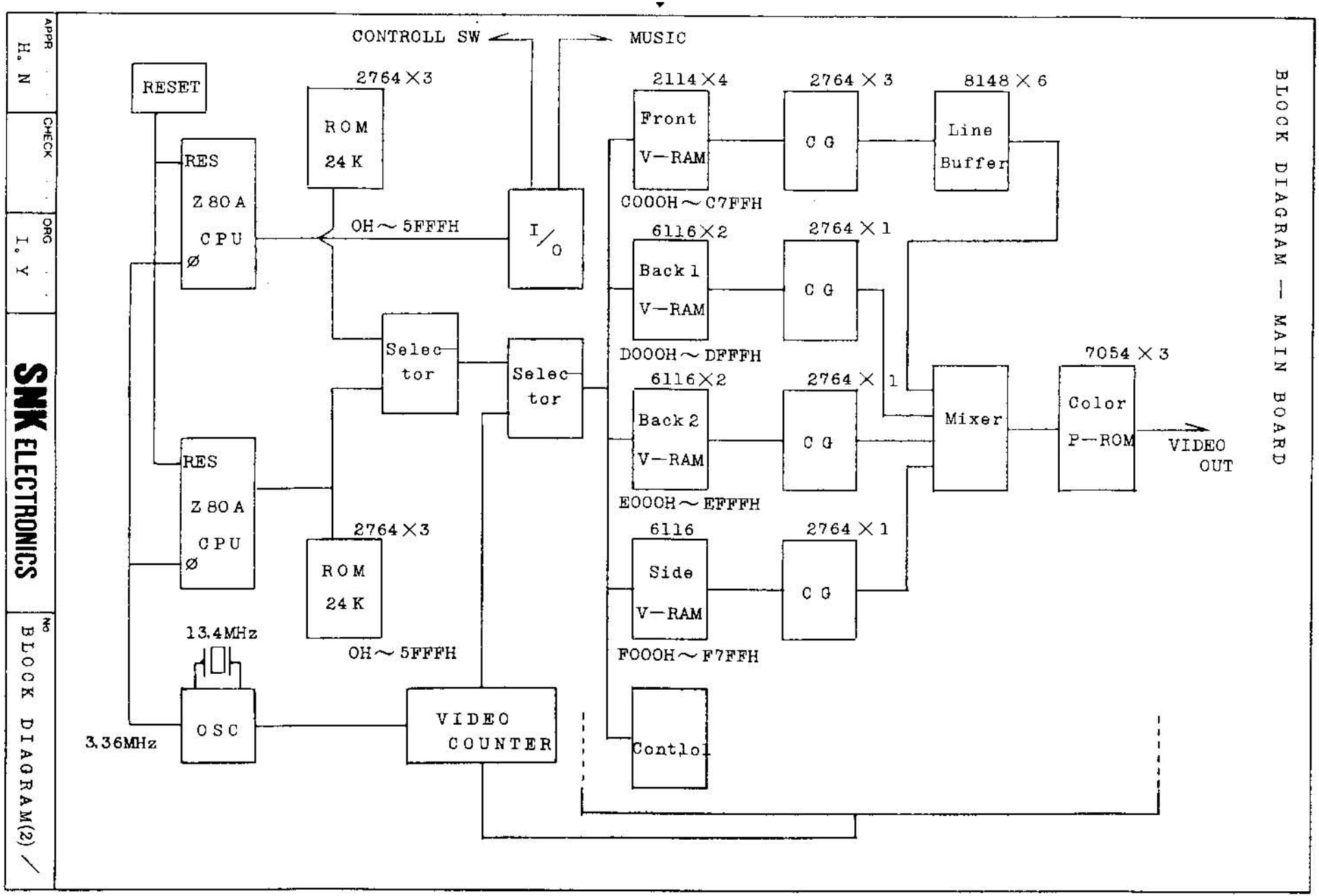
APPR
H. N
CHECK
ORG
I. Y
SNK ELECTRONICS
No
BLOCK DIAGRAM(2)
BLOCK DIAGRAM — MAIN BOARD
CONTROLL SW
MUSIC
RESET
2764×3
ROM
24K
RES
Z80A
CPU
Ø
OH～5FFFH
I/O
Selec
tor
Selec
tor
2114×4
Front
V—RAM
C000H～C7FFH
2764×3
CG
8148×6
Line
Buffer
6116×2
Back1
V—RAM
D000H～DFFFH
2764×1
CG
6116×2
Back2
V—RAM
E000H～EFFFH
2764×1
CG
7054×3
Color
P—ROM
VIDEO
OUT
Mixer
6116
Side
V—RAM
F000H～F7FFH
2764×1
CG
Contlol
RES
Z80A
CPU
Ø
2764×3
ROM
24K
OH～5FFFH
13.4MHz
OSC
3.36MHz
VIDEO
COUNTER

BLOCK DIAGRAM—SOUND BOARD

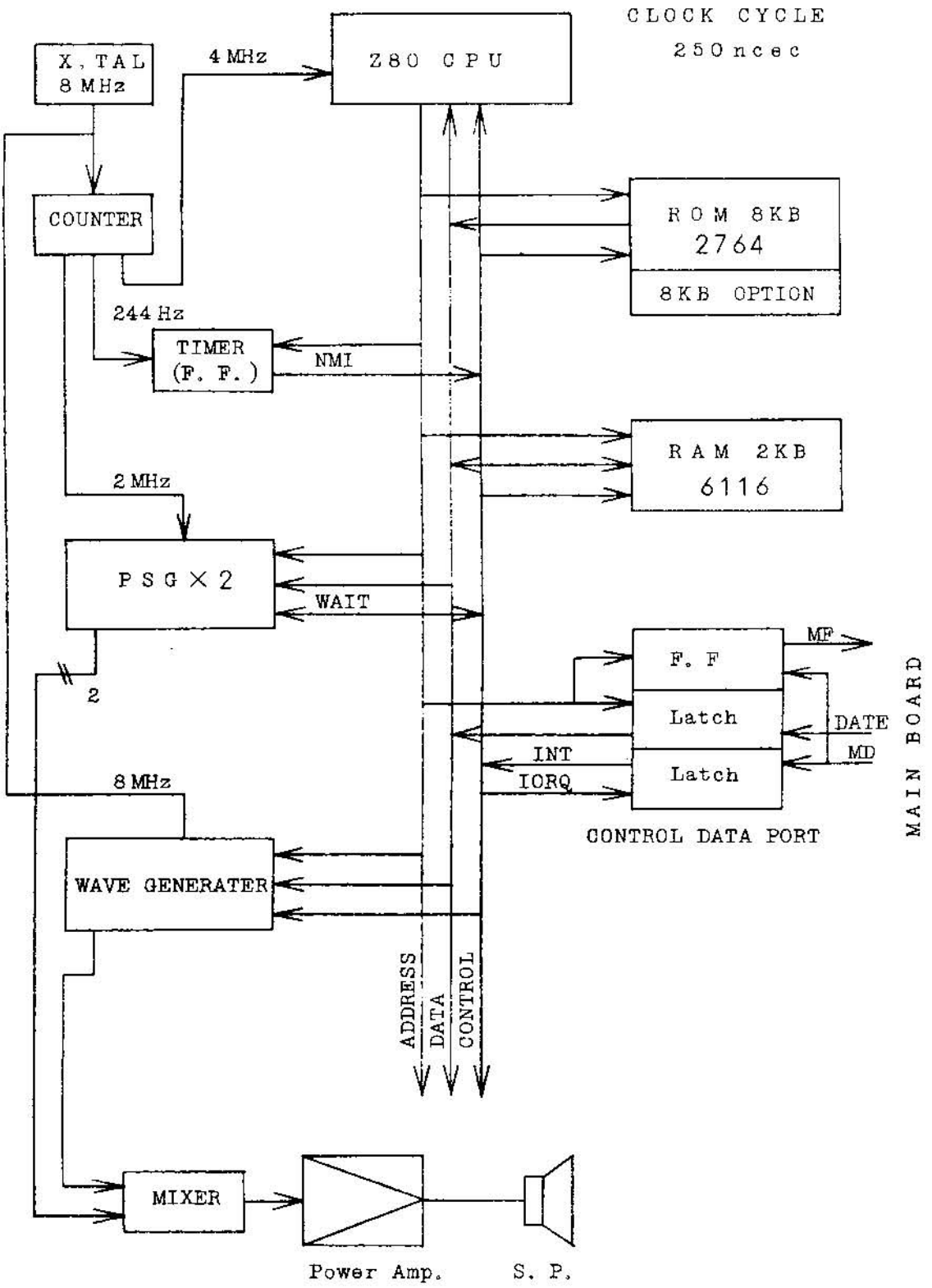

APPR	CHECK	ORG		No
H. N		K	SNK ELECTRONICS	BLOCK DIAGRAM(1)／

1 INSTRUCTION ON MAIN P. C. BOARD

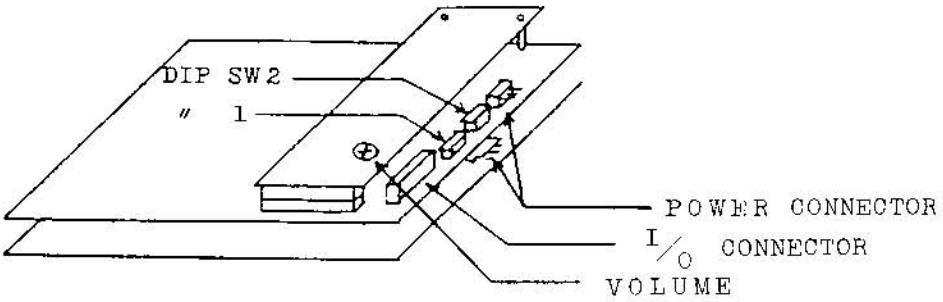

2 DIP SW SETTINGS

2-1 DIP SW 1

SW No.	8	7	6	5	4	3	2	1
NUMBER OF PLAY 1						OFF	ON	ON
〃 2						OFF	ON	OFF
〃 3						OFF	OFF	ON
〃 5						OFF	OFF	OFF
PLAY CAN BE CONTINUED						ON		
COIN/PLAY 1/1		OFF	ON	ON	ON			
〃 1/2		OFF	ON	ON	OFF			
〃 1/3		OFF	ON	OFF	ON			
〃 1/5		OFF	ON	OFF	OFF			
〃 1/6		OFF	OFF	ON	ON			
〃 2/1		OFF	OFF	ON	OFF			
〃 3/1		OFF	OFF	OFF	ON			
〃 5/1		OFF	OFF	OFF	OFF			
FREE PLAY		ON						
SCREEN STOP	ON							

2-2 DIP SW 2

SW No.	8	7	6	5	4	3	2	1
1st BONUS 10000						ON	ON	ON
〃 20000						ON	ON	OFF
〃 30000						ON	OFF	ON
〃 40000						ON	OFF	OFF
〃 50000						OFF	ON	ON
〃 60000						OFF	ON	OFF
〃 70000						OFF	OFF	ON
〃 80000						OFF	OFF	OFF
2nd BONUS NO USED				ON	ON			
〃 +1st BONUS				ON	OFF			
〃 +1st×2				OFF	ON			
〃 +1st×3				OFF	OFF			
MUSIC IN ATTRACT MODE			OFF					
TABLE		OFF						
SWITCH THE SCREEN	OFF							

THE EXAMPLE OF 2ND BONUS:

1st BONUS = 30000 2nd BONUS = 1st × 2

2nd BONUS POINT = 1st + 1st × 2

= 30000 + 30000 × 2 = 90000

SWITCH THE SCREEN

WHEN THE DIRECTION OF PLAYER 1 IS INCORRECT, USE "ON".

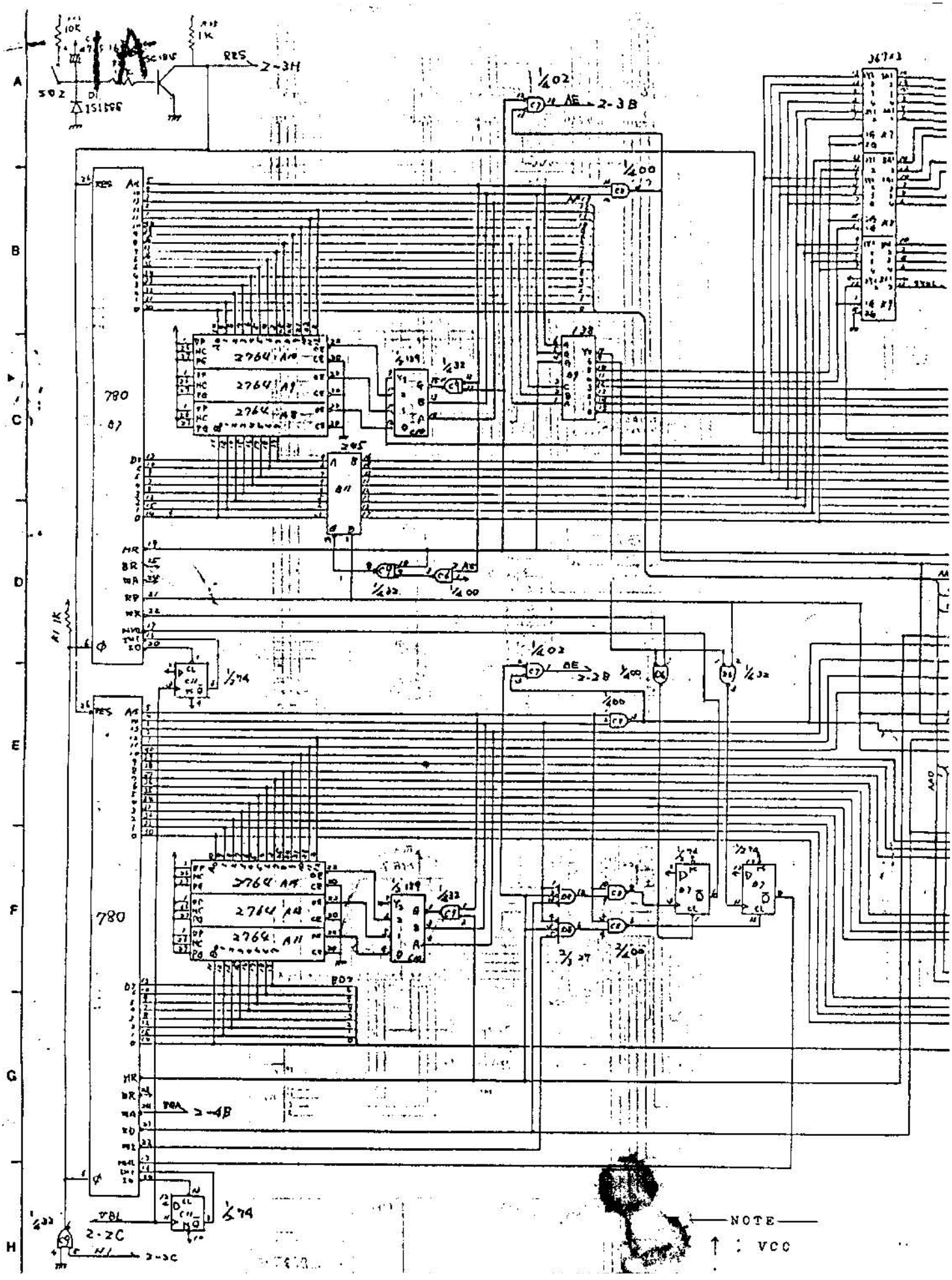

RES
2-3H
1/402
AE
2-3B
1/400
780
2764 A10
2764 A9
2764 A8
1/32
245
1/74
2-2B
2-4B
2-2C
VBL
NOTE
↑ : VCC

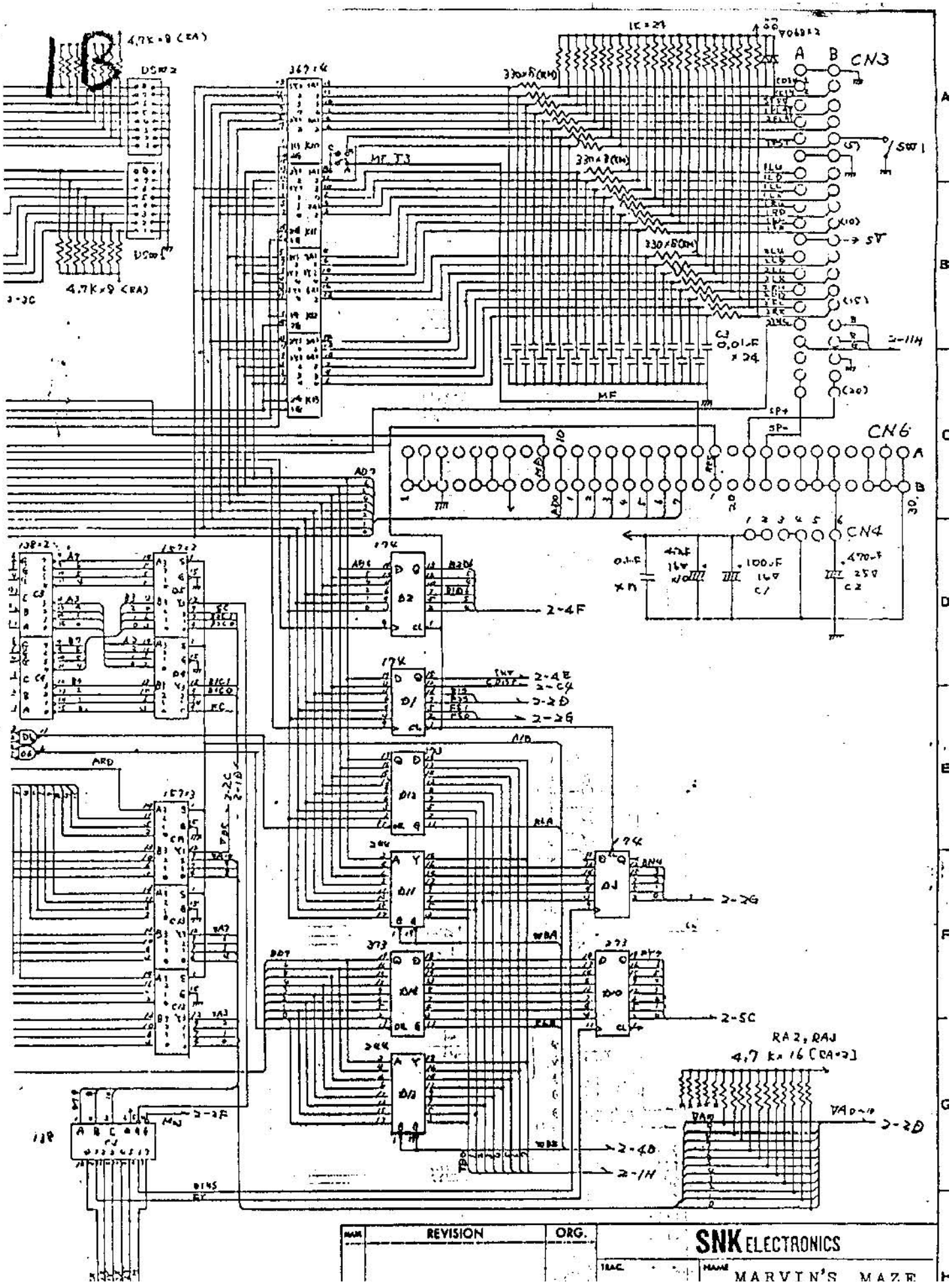

NAM	REVISION	ORG.	SNK ELECTRONICS
			TRAC. NAME MARVIN'S MAZE

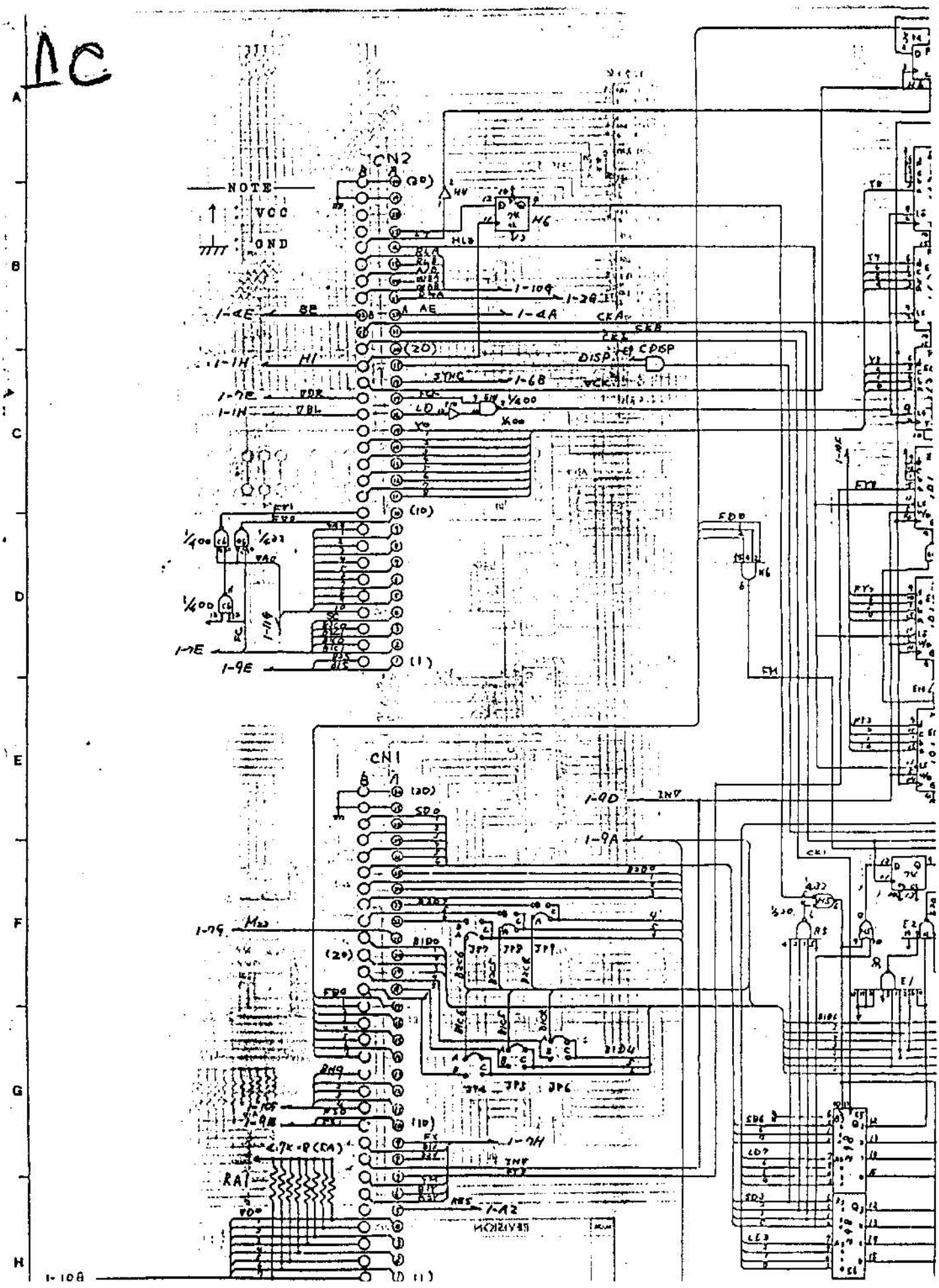

1C
NOTE
VCC
GND
CN2
CN1
1-4E
1-4A
1-1H
1-7E
1-9E
1-9D
1-9A
1-7H
1-A2
1-10B
1-10G
1-2G
1-6B
1/400
CDISP
DISP
SYNC
RA1

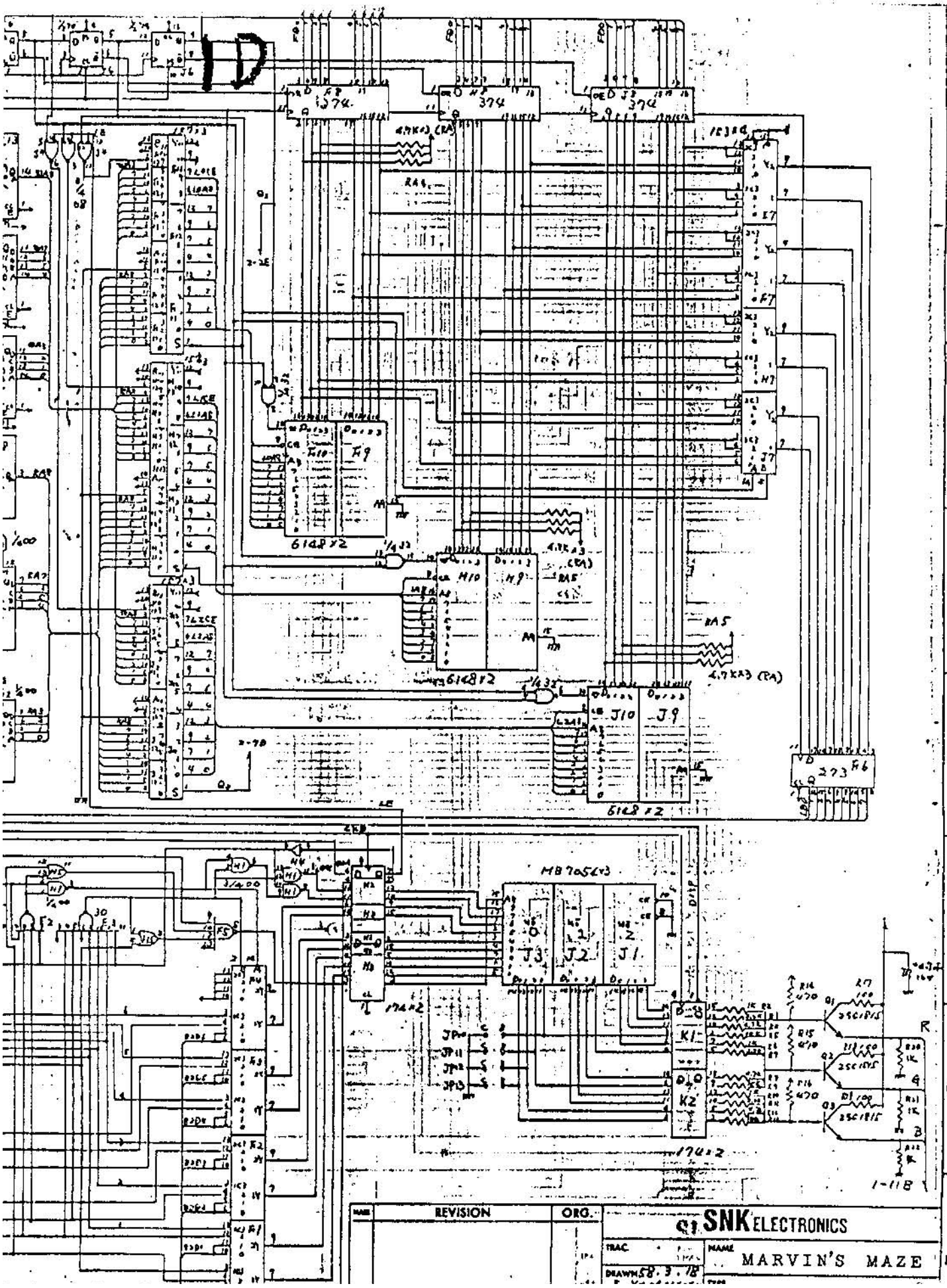
1D
374
374
374
6148×2
6148×2
6148×2
MB7054×3
174×2
174×2
273
REVISION
ORG.
SNK ELECTRONICS
NAME
MARVIN'S MAZE
DRAWN 58.3.18

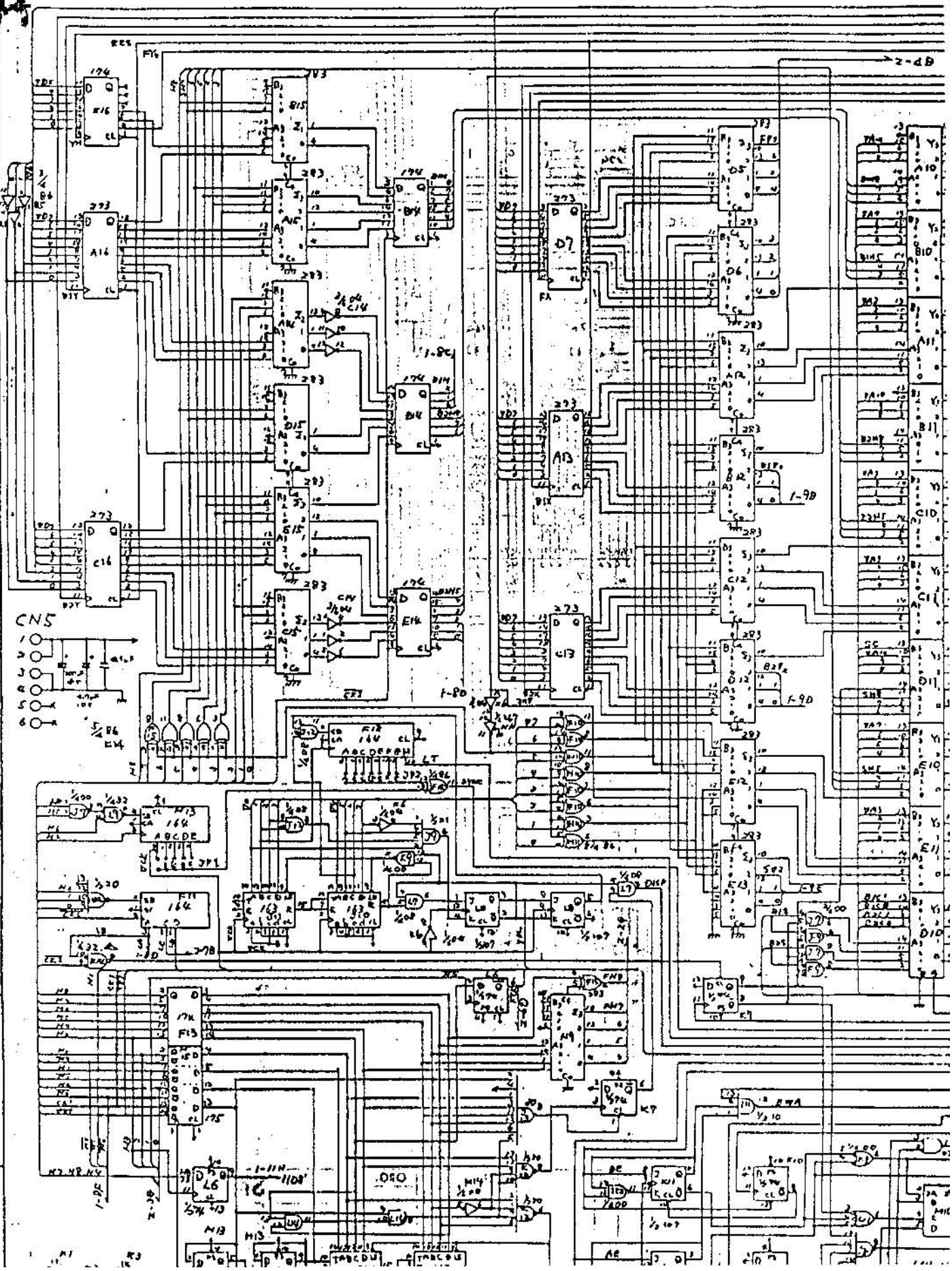

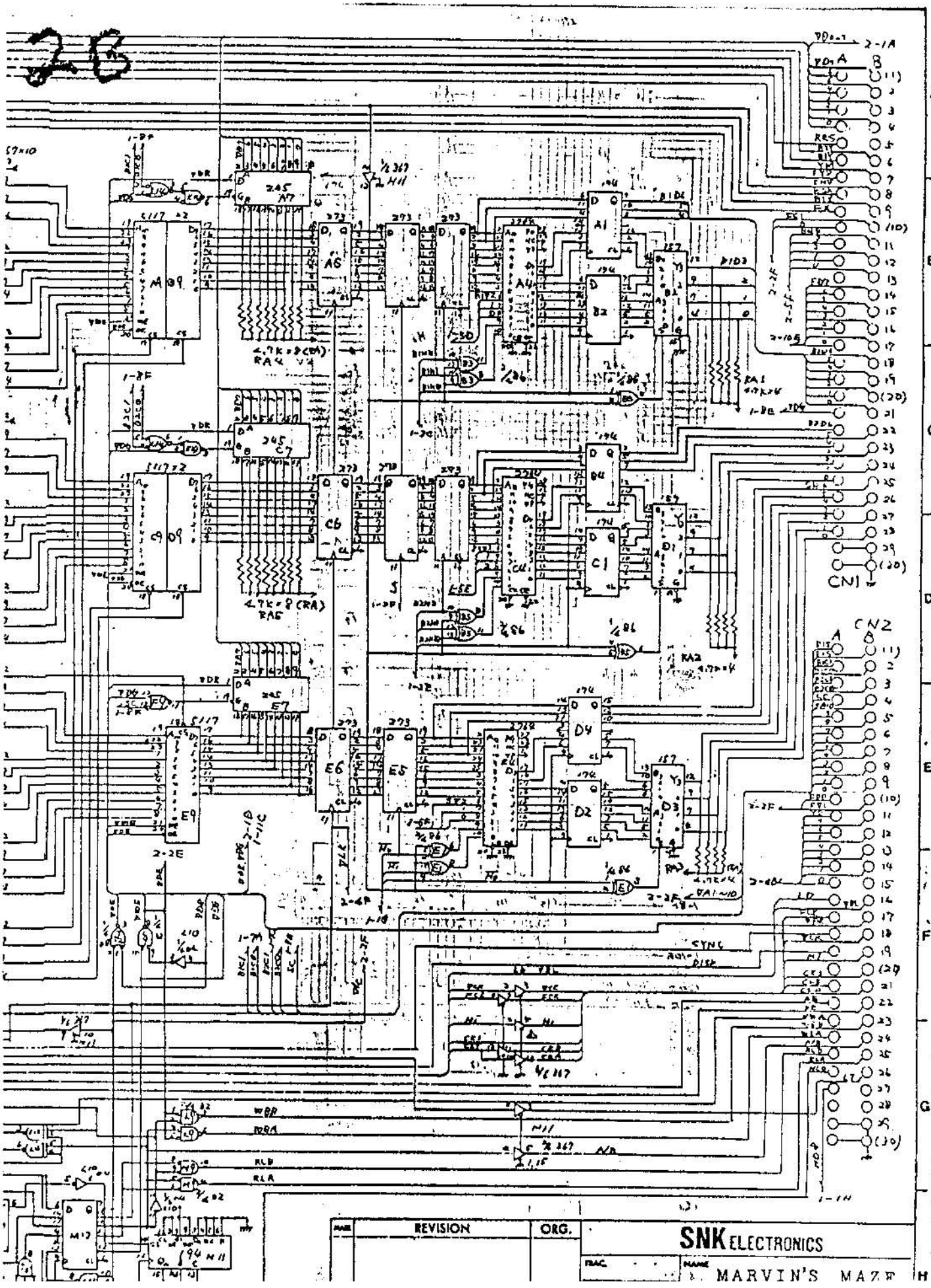
2B
CN1
CN2
REVISION
ORG.
SNK ELECTRONICS
MARVIN'S MAZE

2C

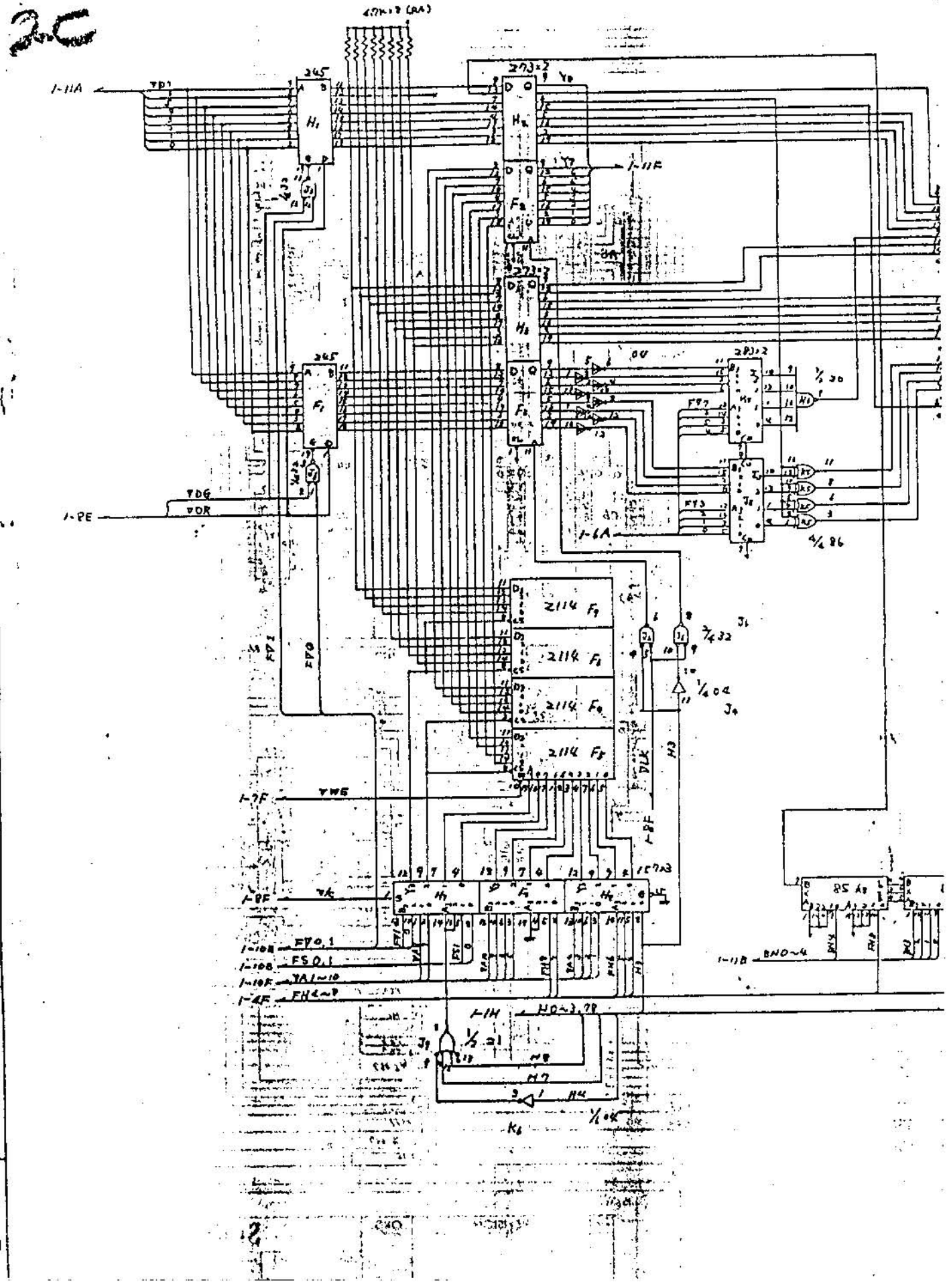

2D

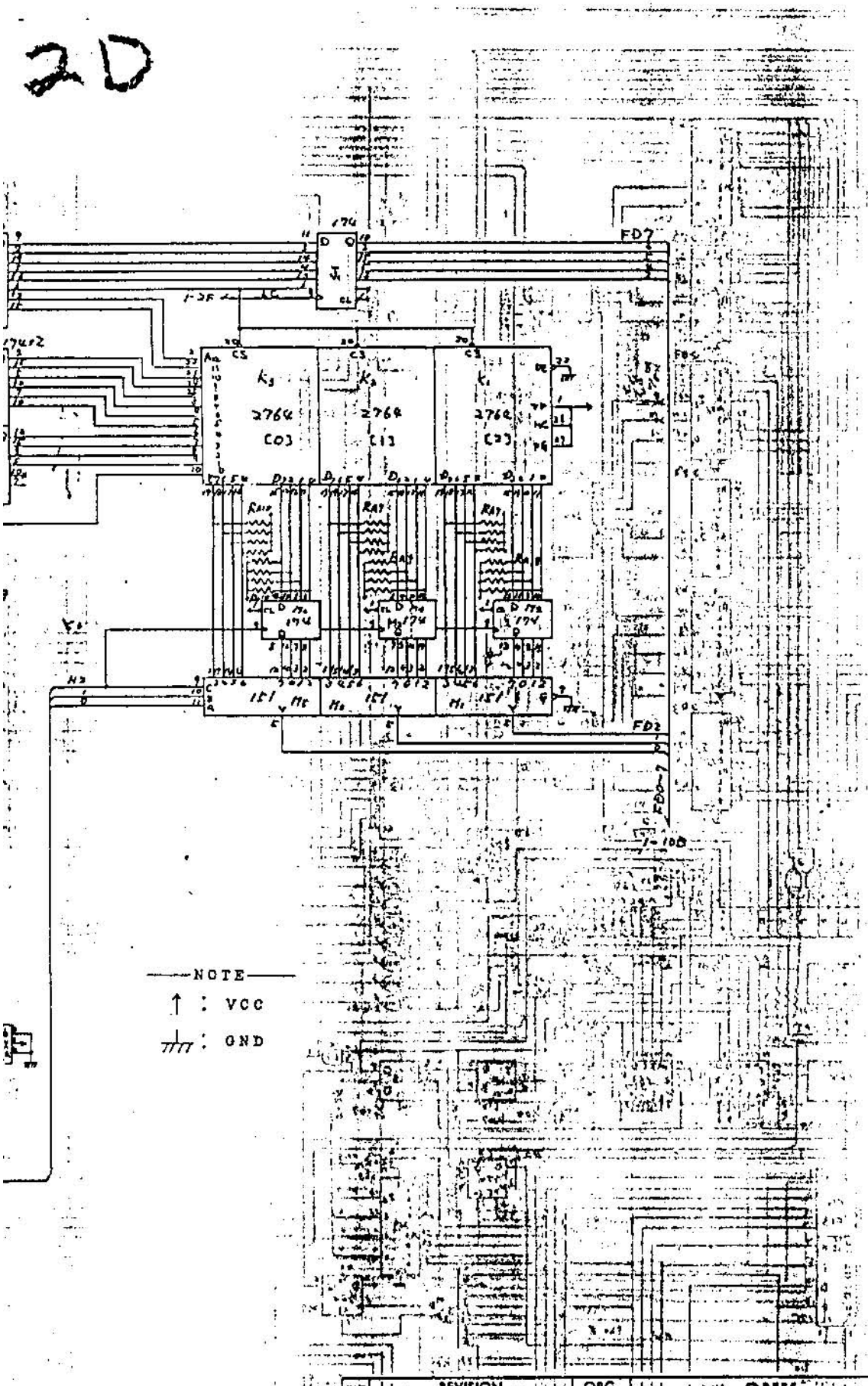

REVISION...	ORG.

SNK ELECTRONICS

NAME MARVIN'S MAZE

3A

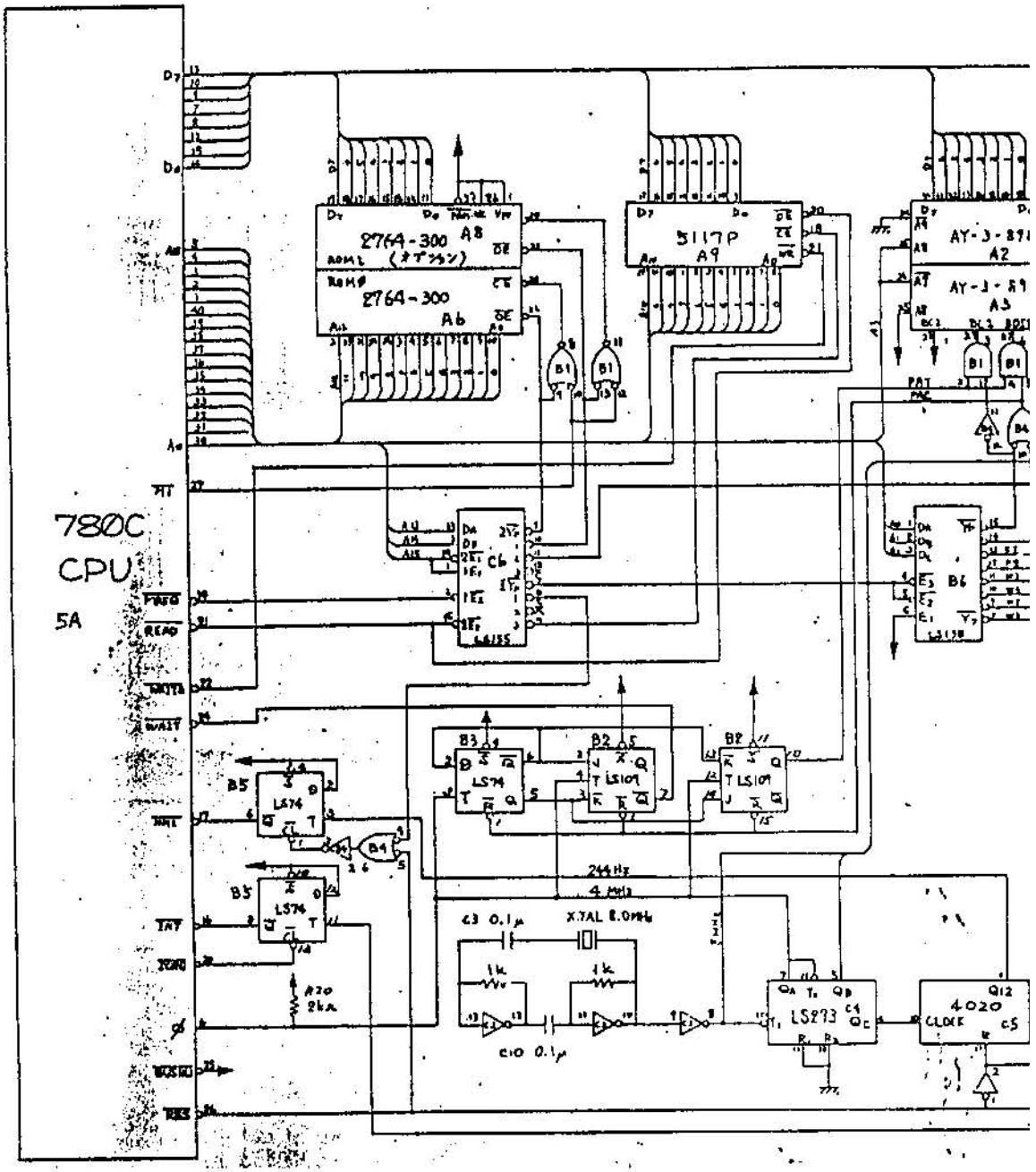

	VCC	GND
780 CPU	11	29
2764 ROM	28	14
5117 RAM	24	12
AY-3-8910 PSG	40	1
4020 or 4040	16	8

NOTE

↑ : VCC

⏚ : GND

3B

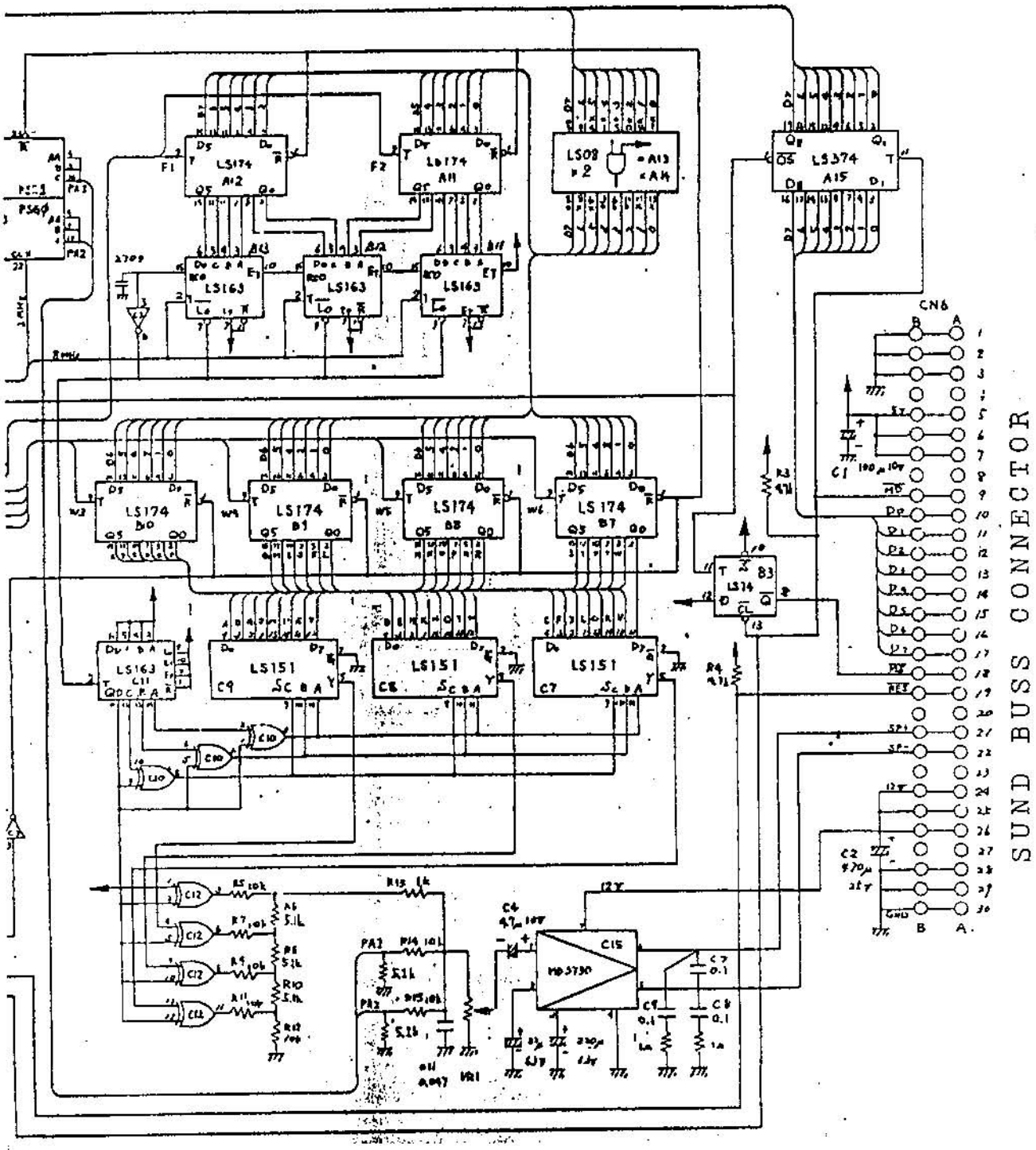

MARK	REVISION	ORG.

SNK ELECTRONICS

DRAC. 83.3.15 KUSUKI	NAME MARVIN'S MAZE
DRAWN 83.3.15 KUSUKI	TYPE SOUND SCHEMATIC
CHECK 83.3.18 [illegible]	DRG.No. A 2003 UC 03—01
APPRO. 83.3.18 H Nunokawa	