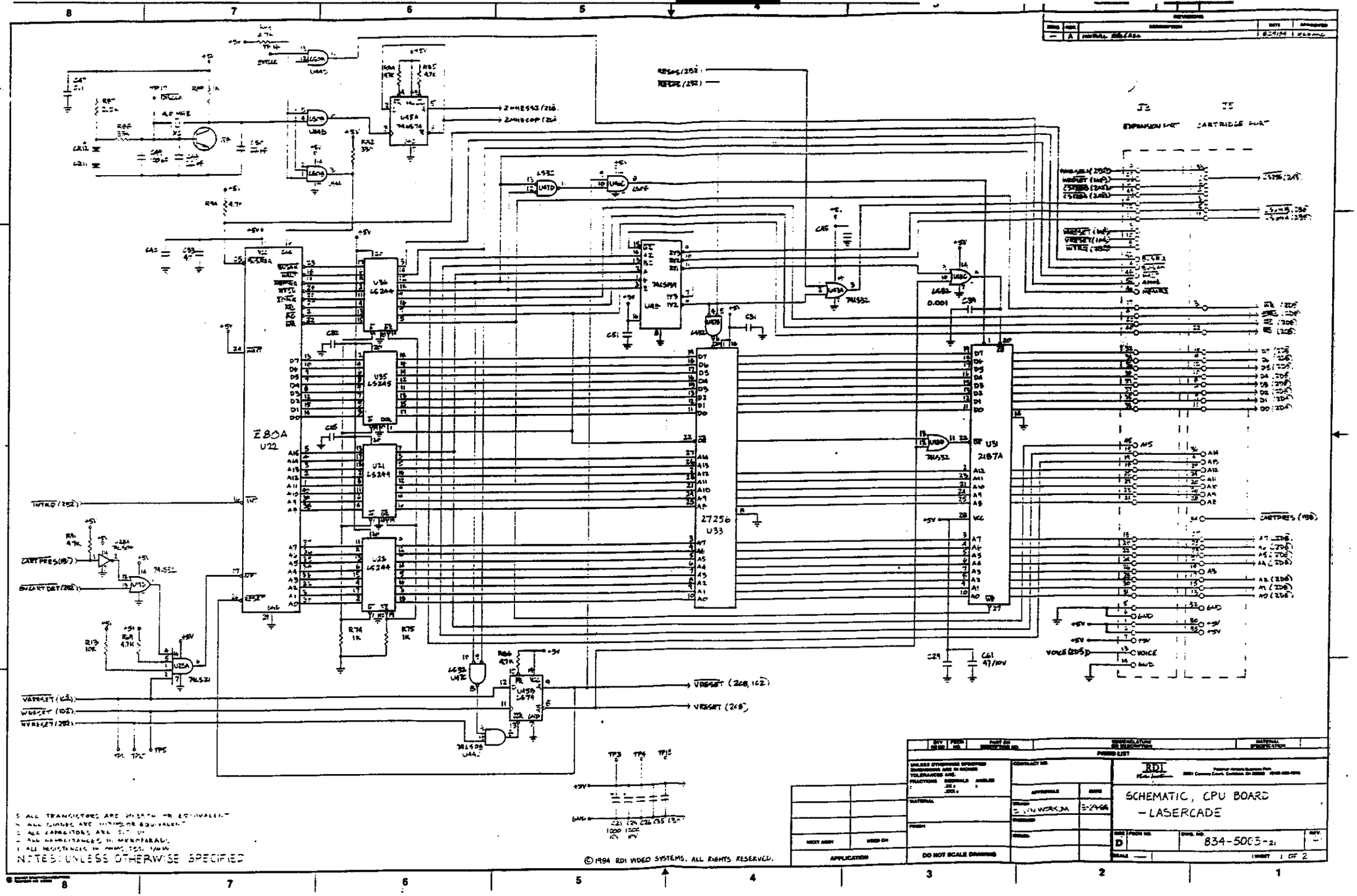

Z80A
U22
27256
U33
U31
2187A
U36
LS244
U35
LS245
U21
LS244
U25
LS244
U45A
74LS74
U45B
U45C
U45D
U45E
U45F
U46A
U46B
U46C
U46D
U46E
U46F
U47A
U47B
U47C
U47D
U48
74LS139
U49
74LS32
U50
74LS32
U51
74LS32
U52A
74LS21
U52B
74LS04
U53
LS74
U44
74LS08
J3
EXPANSION PORT
J5
CARTRIDGE PORT
INTRQ (252)
CARTPRES (187)
ENCARTDET (252)
VRESET (208, 102)
VRESET (208)
VRESET (102)
NVRESET (252)
VOICE (205)
CARTPRES (158)
GND
+5V
NOTES: UNLESS OTHERWISE SPECIFIED
© 1984 RDI VIDEO SYSTEMS. ALL RIGHTS RESERVED.
DO NOT SCALE DRAWING
RDI
SCHEMATIC, CPU BOARD
-LASERCADE
D
834-5003-21
SHEET 1 OF 2

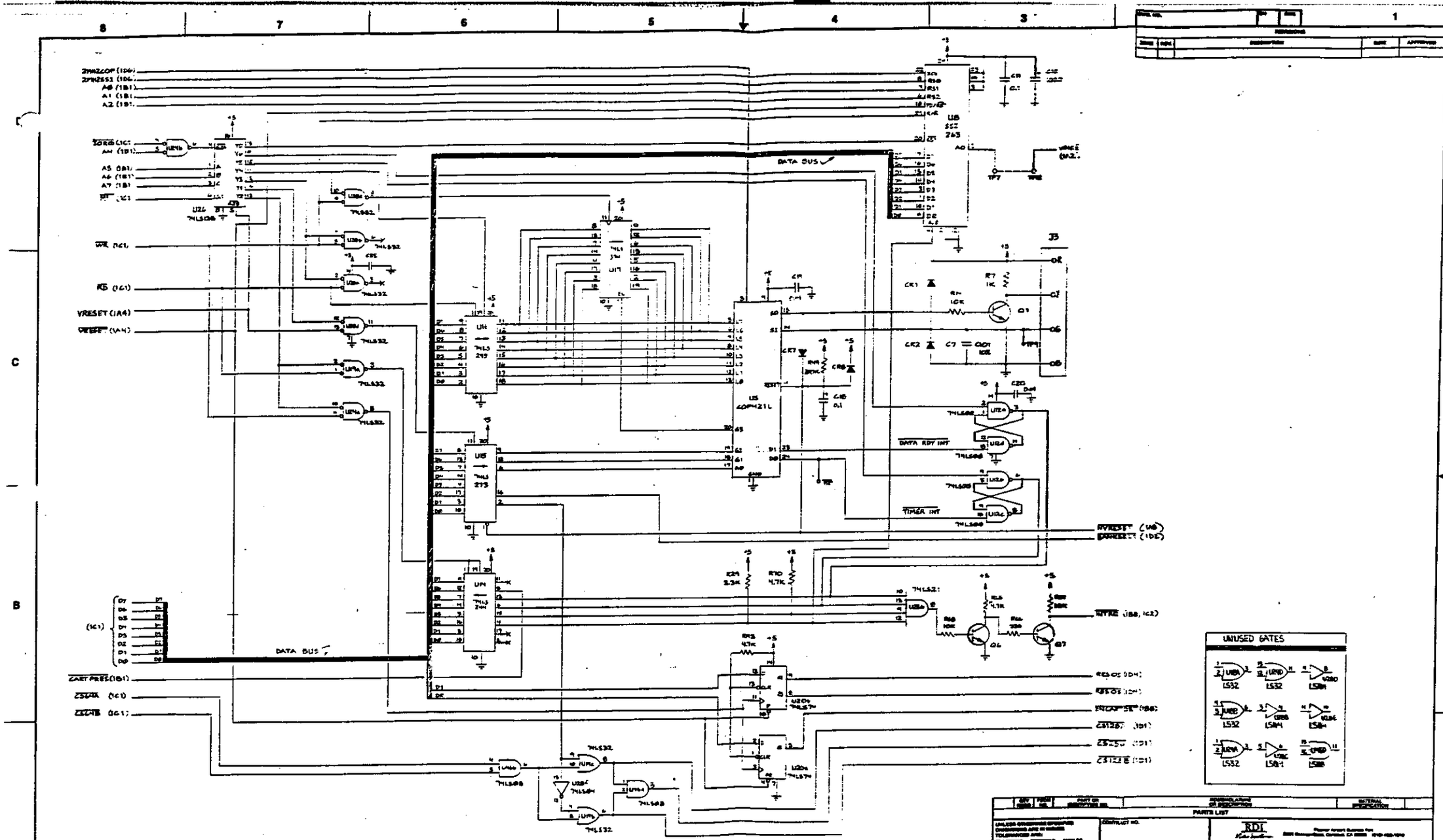

©1984 RDI VIDEO SYSTEMS, ALL RIGHTS RESERVED.

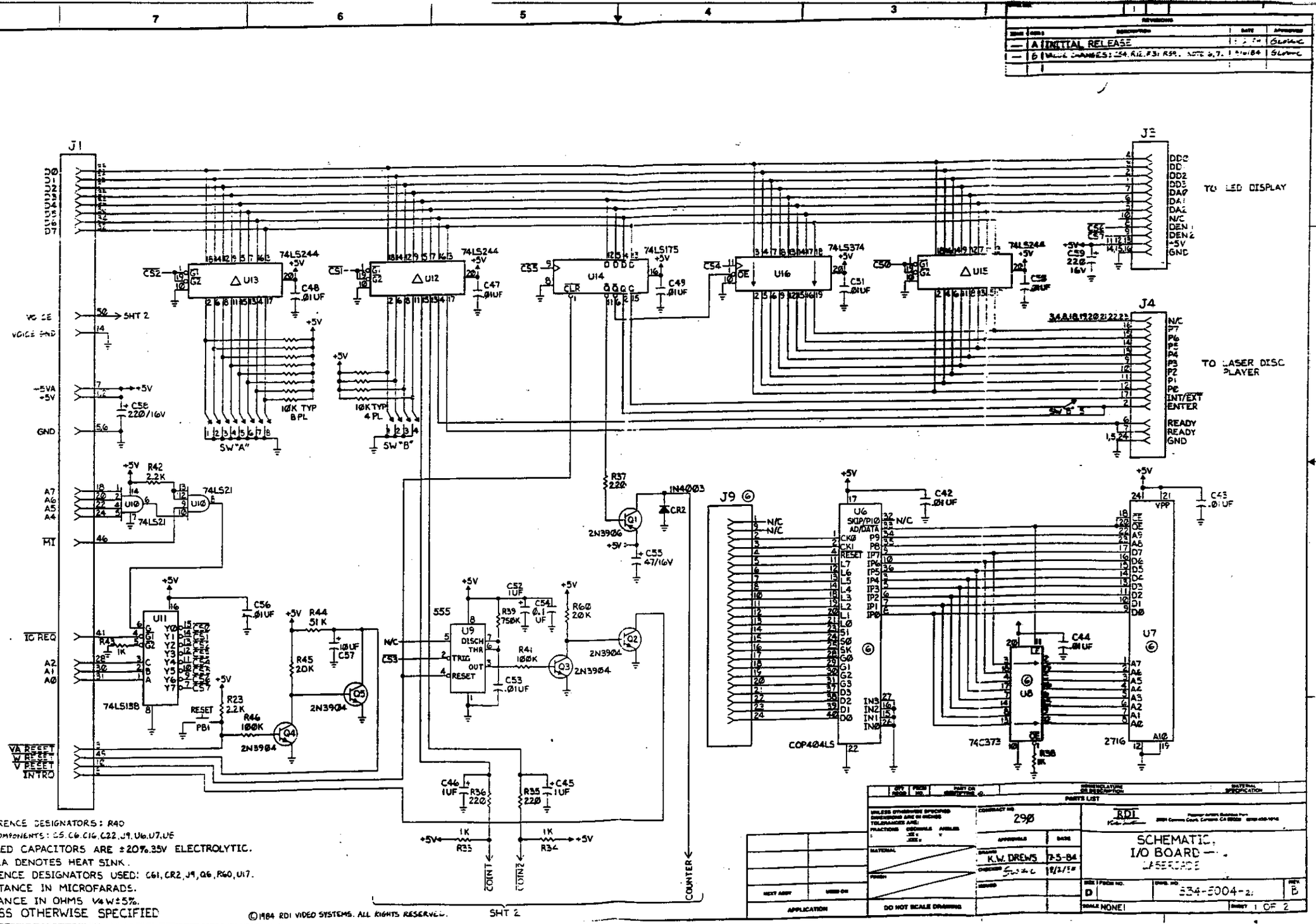

1. UNUSED REFERENCE DESIGNATORS: R40
6. UNMOUNTED COMPONENTS: C5, C6, C16, C22, J9, U6, U7, U8
5. ALL POLARIZED CAPACITORS ARE ±20%, 35V ELECTROLYTIC.
4. DOTTED AREA DENOTES HEAT SINK.
3. LAST REFERENCE DESIGNATORS USED: C61, CR2, J9, Q6, R60, U17.
2. ALL CAPACITANCE IN MICROFARADS.
1. ALL RESISTANCE IN OHMS 1/4W ±5%.

NOTES: UNLESS OTHERWISE SPECIFIED

©1984 RDI VIDEO SYSTEMS. ALL RIGHTS RESERVED.

REVISIONS			
A	INITIAL RELEASE		
B	VALUE CHANGES: C54, R12, R31, R59, NOTE 6, 7.	9/6/84	

PARTS LIST

CONTRACT NO. 290		RDI	
DRAWN K.W. DREWS	7-5-84	SCHEMATIC, I/O BOARD — LASERCADE	
CHECKED	12/2/84		
SIZE D	DWG. NO. 534-5004-2	REV. B	
SCALE NONE	SHEET 1 OF 2		

DO NOT SCALE DRAWING

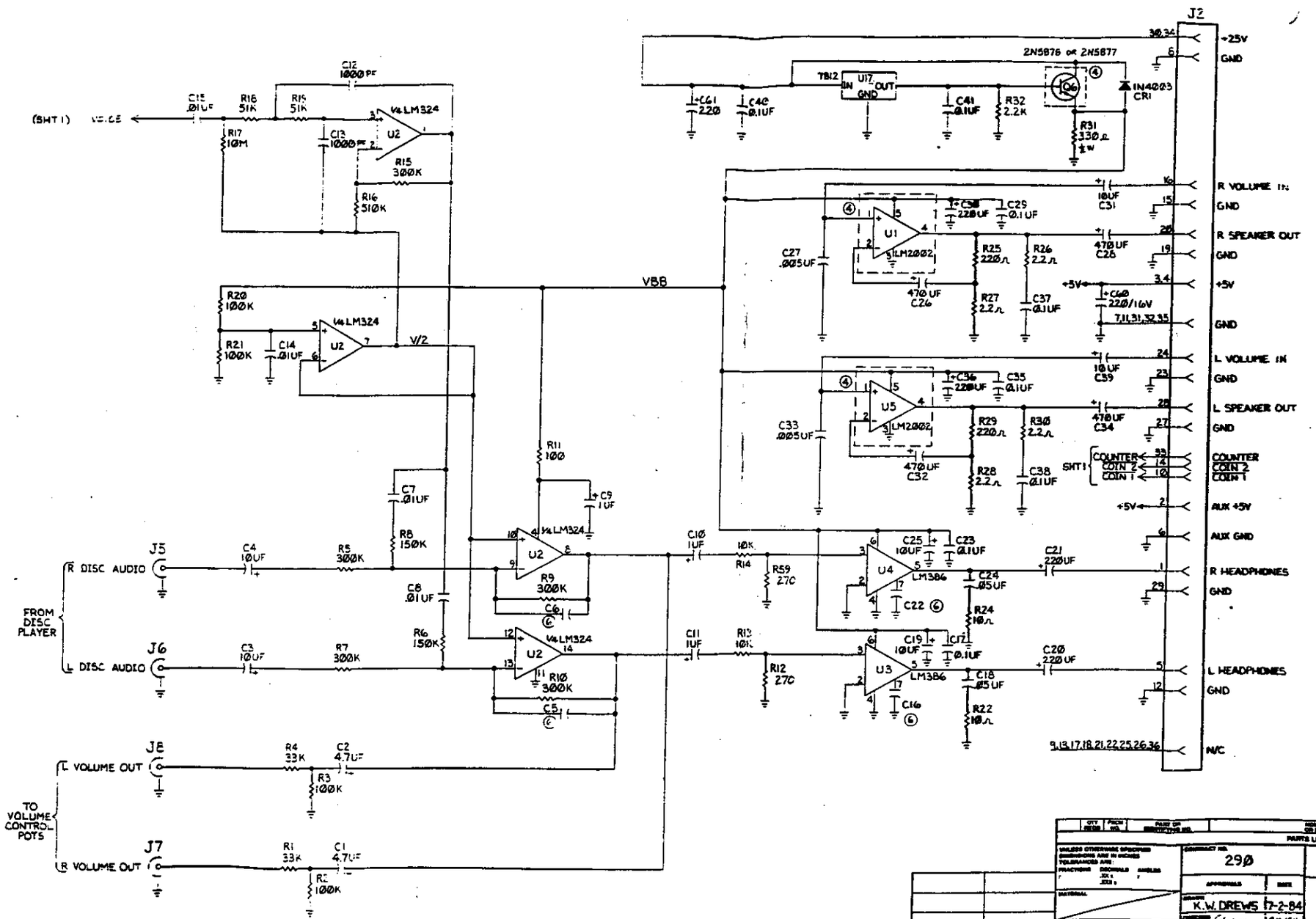

PARTS LIST

CONTRACT NO. 290		RDI	
APPROVALS	DATE	SCHEMATIC, I/O BOARD — LASERCADE	
DRAWN K.W. DREWS	7-2-84		
CHECKED	3/12/84		
ISSUED		SIZE D	DWG. NO. 834-5004-2
		SCALE NONE	SHEET 2 OF 2

DO NOT SCALE DRAWING

(C)1984 RDI VIDEO SYSTEMS. ALL RIGHTS RESERVED.

REVISIONS				
ZONE	REV	DESCRIPTION	DATE	APPROVED
—	A	INITIAL RELEASE	6/15/84	KLutz
—	B	DELETED MOD. CONN. RETITLED.	9/6/84	Glorenc

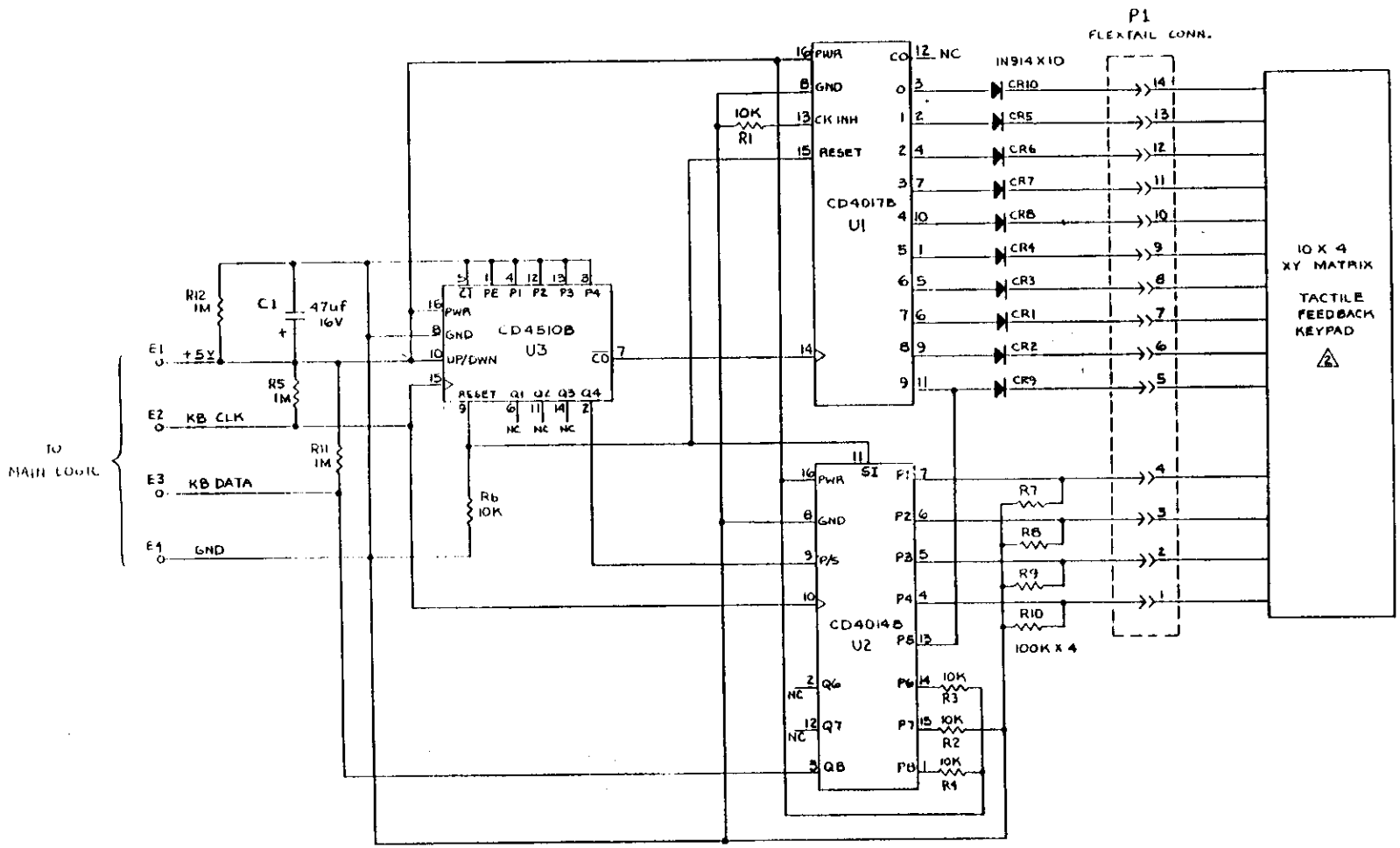

3. LAST REF DESIGNATORS USED: C1, P1, R12, U3.
2. TACTILE FEEDBACK KEYPAD PER DWG #2776L5503B008. SHOWN FOR REFERENCE ONLY.
1. RESISTANCE VALUES ARE IN OHMS ¼W ±5%.

NOTES: UNLESS OTHERWISE SPECIFIED

©1984 RDI VIDEO SYSTEMS
ALL RIGHTS RESERVED.

PARTS LIST

QTY REQD	FSCM NO	PART OR IDENTIFYING NO	NOMENCLATURE OR DESCRIPTION	MATERIAL SPECIFICATION

CONTRACT NO.		RDI	
APPROVALS	DATE	SCHEMATIC, KEYBOARD LOGIC	
DRAWN K. THORNTON	6-1-84		
CHECKED K LUTZ	6/1/84		
ISSUED		SIZE C	FSCM NO.
		DWG. NO. 834-5008-21	REV B
		SCALE 2/1	SHEET 1 OF 1

NEXT ASSY | USED ON | APPLICATION

DO NOT SCALE DRAWING

APPENDIX C

ARCADE MAIN HARNESS DEFINITIONS

FROM	PIN	TO	PIN	SIGNAL
LF	HOT	SW	COMMON	AC LINE HOT
SW	N/OPEN	PS1	3	AC LINE HOT
SW	N/OPEN	VDP	HOT	AC LINE HOT
LF	NEUTRAL	PS1	2	AC LINE NEUTRAL
LF	NEUTRAL	VDP	NEUTRAL	AC LINE NEUTRAL
PS2	1	ISO	PRI	115V AC #1 HOT
PS2	3	LAMP	HOT	115V AC #2 HOT
PS2	3	FAN	HOT	115V AC #2 HOT
PS2	2	ISO	PRI	115V AC #1 NEUTRAL
PS2	4	LAMP	NEUTRAL	115V AC #2 NEUTRAL
PS2	4	FAN	NEUTRAL	115V AC #2 NEUTRAL
MON	FRAME	LAMP	FRAME	FRAME GROUND
PS1	1	MON	FRAME	FRAME GROUND
LF	FRAME	PS1	1	FRAME GROUND
LF	FRAME	CPU	FRAME	FRAME GROUND
CPU	FRAME	COIN	3	FRAME GROUND
COIN	3	OCP	9	FRAME GROUND
OCP	9	CP	7	FRAME GROUND
PS1	9	CPU	3	+5V
PS1	10	CPU	4	+5V
PS1	11	CPU	7	+5V RETURN
PS1	7	CPU	30	+25V
PS1	12	CPU	8	+25V RETURN
PS1	5	COIN	8	6.3V AC LAMPS
PS1	4	COIN	9	6.3V AC LAMPS RETURN
COIN	1	CPU	10	COIN SLOT 0
COIN	2	CPU	14	COIN SLOT 1
COIN	7	CPU	11	COIN RETURN
CP	2	CPU	6	AUX GROUND
CP	3	CPU	2	AUX +5V
CP	4	CPU	1	NOT USED
CP	5	CPU	29	NOT USED
CP	6	CPU	5	HEADPHONE (LEFT)
CP	8	CPU	9	NOT USED
CP	9	CPU	13	NOT USED
CP	1	CPU	12	HEADPHONE RETURN (LEFT)
OCP	4	CPU	33	COIN COUNTER
OCP	8	CPU	32	COIN COUNTER RETURN
OCP	3	CPU	J8CENTER	L VOLUME OUT
OCP	1	CPU	J8SHIELD	L VOLUME OUT RETURN
OCP	5	CPU	J7CENTER	R VOLUME OUT
OCP	7	CPU	J7SHIELD	R VOLUME OUT RETURN

FROM	PIN	TO	PIN	SIGNAL
OCP	2	CPU	24	L VOLUME IN
OCP	1	CPU	23	L VOLUME IN RETURN
OCP	6	CPU	16	R VOLUME IN
OCP	7	CPU	15	R VOLUME IN RETURN
CPU	28	SPKR	L+	SPEAKER (LEFT)
CPU	27	SPKR	L-	SPEAKER RETURN (LEFT)
CPU	20	SPKR	R+	SPEAKER (RIGHT)
CPU	19	SPKR	R-	SPEAKER RETURN (RIGHT)

PS1 = POWER SUPPLY 12 PIN CONNECTOR
PS2 = POWER SUPPLY 4 PIN CONNECTOR
FAN = COOLING FAN
SW = POWER SWITCH
CPU = CIRCUIT BOARD MODULE
LAMP = FLUORESCENT LAMP (MARQUEE)
CP = CONTROL PANEL
SPKR = SPEAKERS
COIN = COIN DOOR
MON = MONITOR
VDP = VIDEODISC PLAYER
LF = AC LINE FILTER
OCP = OPERATOR CONVENIENCE PANEL
ISO = MONITOR ISOLATION TRANSFORMER

NOTE: GAMES EQUIPPED WITH PR7820 DISC PLAYERS HAVE DISC PLAYER FRAME GROUND TIED TO LINE FILTER FRAME GROUND.