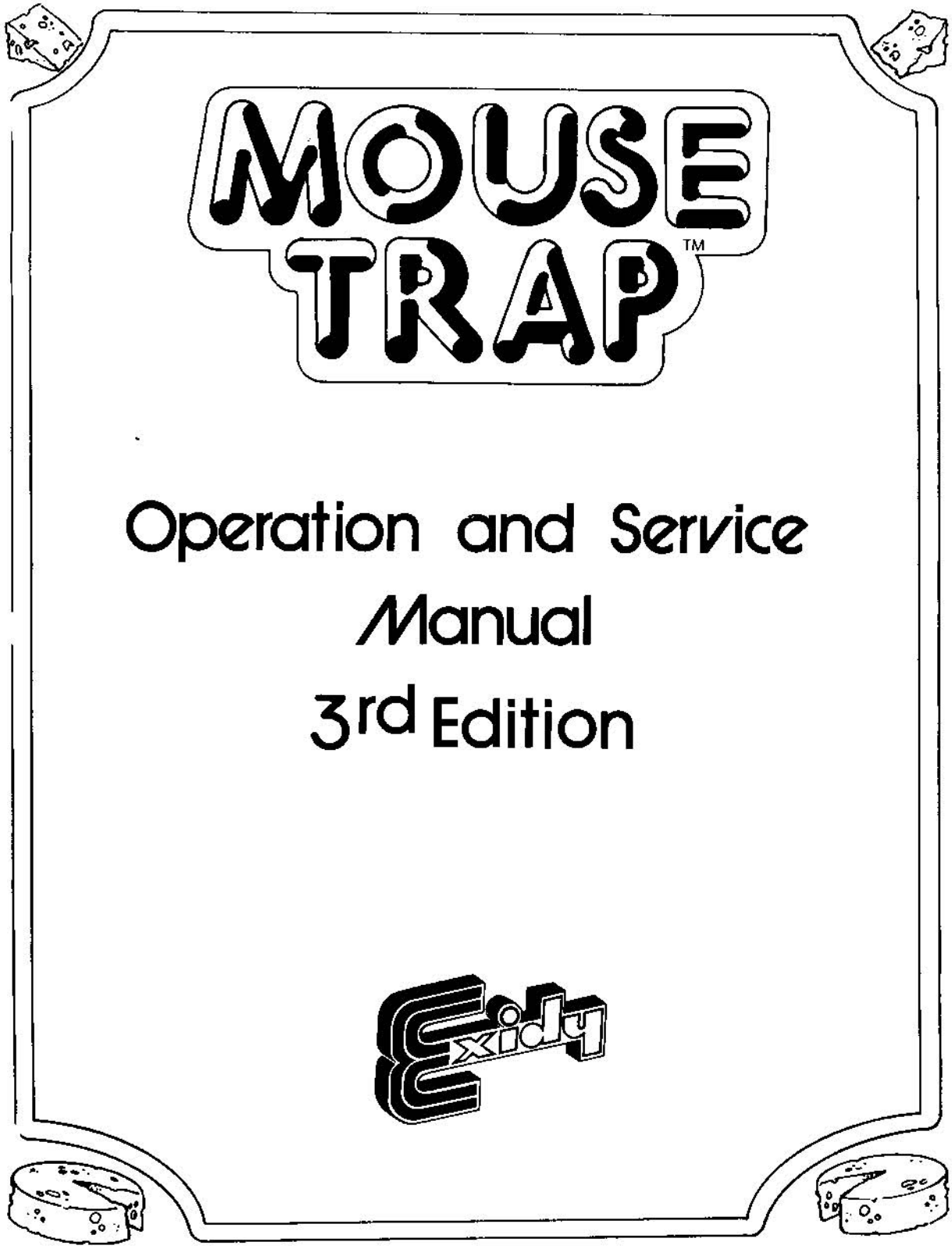

MOUSE TRAP™

Operation and Service Manual

3rd Edition

Exidy

MOUSE TRAP™

Operation and Service Manual
3rd Edition

(c) 1981 Exidy, Inc.
390 Java Drive, Sunnyvale, California 94086-1271
Telephone: (408) 734-9410
Toll-free: (800) 538-8402
Telex: 357-499

INTRODUCING THE EXIDY OPERATOR CONVENIENCE PACKAGE

Exidy's New Operator Convenience Package makes all components accessible through the front of the game. Each door has its own separate lock and key, securing game **service** to **capable** hands, and **profits** to the **right** hands!

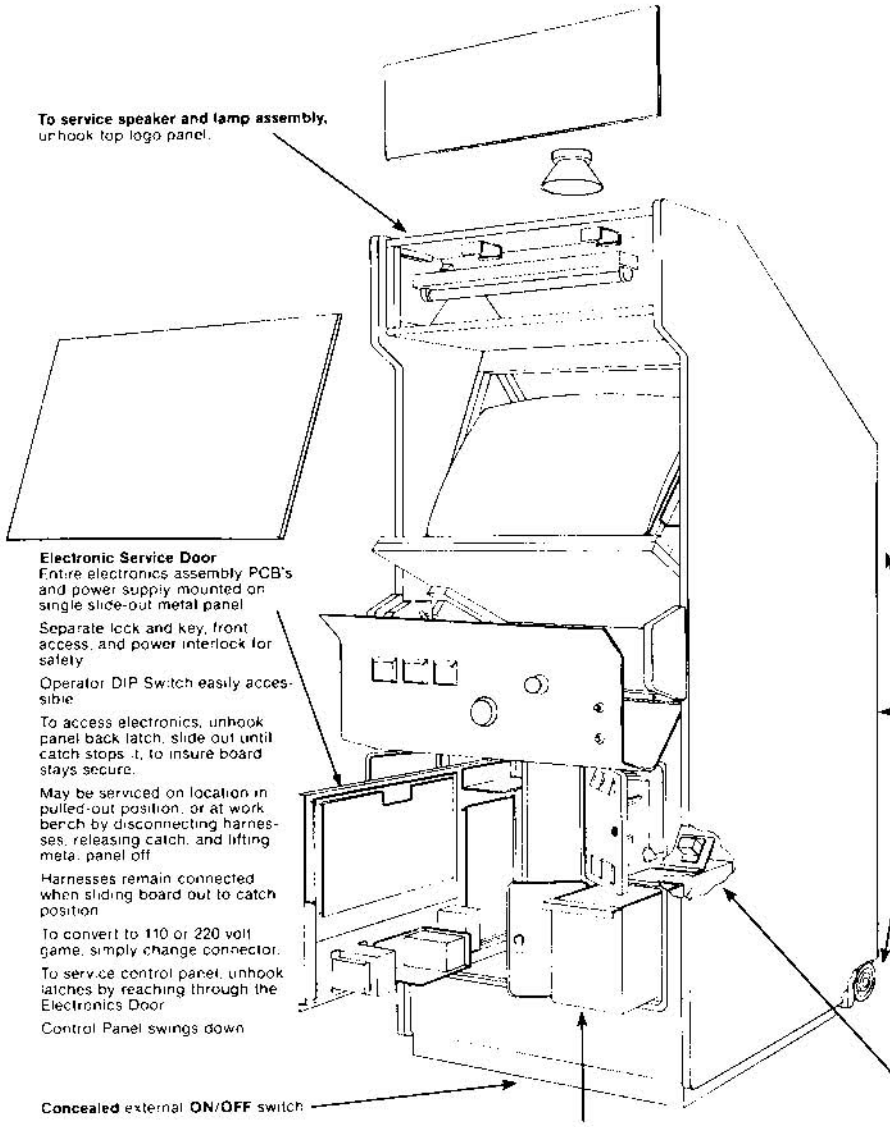

To service speaker and lamp assembly, unhook top logo panel.

Monitor Service Door
Separate lock and key, power interlock switch for safety.

In addition to front access to monitor, this door is located in back of cabinet for easy access to monitor adjustments.

Electronic Service Door
Entire electronics assembly PCB's and power supply mounted on single slide-out metal panel

Separate lock and key, front access, and power interlock for safety

Operator DIP Switch easily accessible

To access electronics, unhook panel back latch, slide out until catch stops it, to insure board stays secure.

May be serviced on location in pulled-out position, or at work bench by disconnecting harnesses, releasing catch, and lifting meta. panel off

Harnesses remain connected when sliding board out to catch position

To convert to 110 or 220 volt game, simply change connector.

To service control panel, unhook latches by reaching through the Electronics Door

Control Panel swings down

Route Operator Features
Large, heavy-duty casters support full weight of game on pivot for one man ease of transportation

Two hand holds for easy grasping

Recessed AC cord storage, also a pivot point with foot

Skid rails to slide game onto truck, spaced to line up in truck bed grooves to prevent sliding.

Concealed external **ON/OFF** switch

Coin Box Door
Separate lock and key, front access, and power interlock switch for safety

Oversize Coin Box enclosed in strong, solid metal box

Inaccessible through any other door, for maximum security

Coin Mech Door
Separate lock and key, front access, and power interlock switch for safety

Lit coin-entry bezels

Accepts all standard coins and may be adjusted for tokens.

Coin Meters mounted on separate bracket for easy reading.

Operator selectable switches mounted on bracket for easy access

To service control panel, unhook latches by reaching through Coin Mech Door

Control panel swings down

To remove monitor from front of game, unplug harness, slide out, release catch

390 Java Drive Sunnyvale, CA 94086 Phone (408) 734-9410, Telex 357-499

2.0 ADJUSTMENTS

2.1 POWER SUPPLY ADJUSTMENTS

All DC Power required to operate MOUSE TRAP™ is supplied by the Exidy Power Supply Module.

CAUTION: Only certified technicians should make adjustments on all components of MOUSE TRAP™. AC line voltage selection is available in your MOUSE TRAP™ game by setting the appropriate jumpers on the power chassis. Only the +5v DC is adjustable. This must be adjusted to:

+5.00v DC +/- .25v

as measured on the Logic PCB near the microprocessor (location 2A).

2.2 SELECTABLE OPTIONS

MOUSE TRAP™ has several switch selectable options controlled by an 8-position DIP switch located on the main logic board at position 16A. This switch is accessible through the front electronics door. Simply slide the logic board out and locate the DIP switch on the lower left-hand corner.

The following drawing shows the particular functions controlled by the 8-position DIP switch.

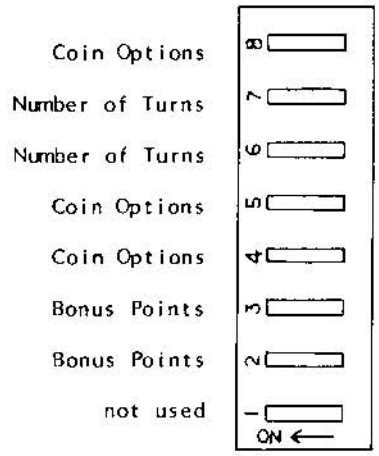

Functions of the 8-position DIP Switch

2.3 SELECTABLE DIP SWITCH SETTINGS

MOUSE TRAP™ is shipped with the dip switch already set for optimum dollar return. Should you decide to change the settings, you may select any of the following options by setting the proper switch accordingly:

A. COINAGE	Switch 4	Switch 5	Switch 8
1 Coin - 1 Credit	OFF	OFF	OFF
2 Coins- 1 Credit	OFF	ON	OFF
1 Coin - 2 Credits	ON	OFF	OFF
1 Coin - 4 Credits	ON	ON	OFF
1 Coin - 3 Credits or 2 Coins- 7 Credits	OFF	ON	ON
1 Coin in Left Slot- 1 Credit 1 Coin in Right Slot- 5 Credits	OFF	OFF	ON
One Coin in Left Slot- 1 Credit 1 Coin in Right Slot- 4 Credits	ON	OFF	ON
Two Coins in Left Slot- 1 Credit 1 Coin in Right Slot- 3 Credits	ON	ON	ON

B. NUMBER OF TURNS	Switch 6	Switch 7
2 turns	OFF	OFF
3 turns	ON	OFF
4 turns	OFF	ON
5 turns	ON	ON

E. BONUS TURN (Extra turn awarded when selectable number of points are made).	Switch 2	Switch 3
Extra turn for 30,000 points	OFF	OFF
40,000	ON	OFF
50,000	OFF	ON
60,000	ON	ON

2.4 AUDIO BOARD ADJUSTMENTS

The illustration that follows points out the four audio adjustments and the location of the DIP switch. The audio board rides piggyback on the logic board, mounted on the left wall of the game, when viewed from the front service door.

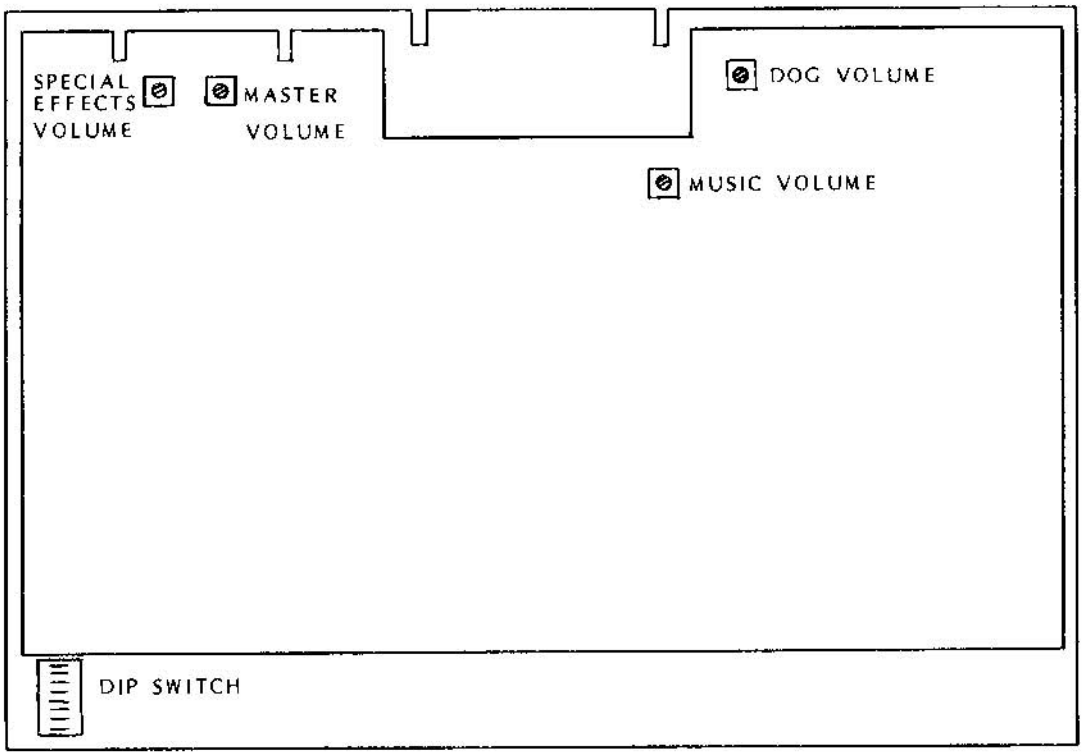

3.0 SELF DIAGNOSTIC TESTS

MOUSE TRAP™ has two diagnostic test modes. The first mode, the Logic/Audio Diagnostic Test Mode, checks the RAM and ROM chips on the Logic Board, and simultaneously checks the Audio Board. This test mode is the normal self-test mode and is automatically performed when MOUSE TRAP™ is first turned on. The second mode tests the Controls and Color only. To run this test, activate the coin switch while powering up. We will explain both of these modes in full detail.

You may bypass both diagnostic modes by depressing either player one or player two start button while powering up. After 8 seconds of the message 'STAND BY VERSION X', (where X is a number) the Attract Mode appears.

3.1 LOGIC/AUDIO DIAGNOSTIC TEST MODE

The RAM Test

When MOUSE TRAP™ is first turned on, a processor and video RAM test is done. If the RAM passes, it goes immediately into the ROM test, without a message indicating it passed the RAM test.

If a RAM chip fails, an attempt is made to indicate the RAM chip where a failure was detected. Since the screen depends on a properly functioning RAM, this indication may not be displayed. A failed RAM may be indicated by a digit from 0 to 7 in every position on the screen using four colors. The code for these digits is as follows:

Number on Screen	RAM chip to check	
0	5A	Processor RAM
1	4A	failure
2	8B	Screen RAM
3	7B	failure
4	11C	
5	13C	Video RAM
6	12C	failure
7	14C	

The RAM test cycles if the failure is persistent.

The ROM Test

If the RAM test passes, the ROM test begins. The message STAND BY VERSION X appears on the screen (where X is a number). One by one, exclamation points (!) appear on the screen. Each exclamation mark indicates half (2K) of a ROM board chip, numbered 6A through 13A, has passed the diagnostic test. After all marks appear, the game then goes into the Attract Mode, indicating all is well.

If any failure is detected during the ROM test, a hex digit appears instead of an exclamation point with a 'BAD ROM' message at the top of the screen. The test repeats indefinately if a bad ROM is encountered. The key for which chip to check is as follows:

Message:	ROM Chip to check:
0	lower 2K of 11A
1	upper 2K of 11A
2	lower 2K of 10A
3	upper 2K of 10A
4	lower 2K of 9A
5	upper 2K of 9A
6	lower 2K of 8A
7	upper 2K of 8A
8	lower 2K of 7A
9	upper 2K of 7A
A	lower 2K of 6A
B	upper 2K of 6A

The Audio Test

While the Logic tests are underway, the Audio board is also being checked.

Five seconds after power on, one or more quick beeps, like an organ chord, are heard. This is part of the Exidy Audio Diagnostic Test. The number of beeps that sound indicate different conditions of the Audio board.

The following code is an indication **only**, of where to first check the Audio Board. Because this diagnostic test only evaluates certain components, other circuitry is relied upon for the test. Should this other circuitry fail, the diagnostic test may not, then, point directly to the failure. Please use the results of this test as a guideline for further troubleshooting.

The code is as follows:

0 beep: If no beeps are heard, along with a hum or random notes, this may indicate a failure in 3A and/or 7A.

1 beep: All audio hardware is OK. However, be sure to check the Attract Mode Cycle anyway for a possible message to check the Audio Board. In occasional instances, this can occur. The message will further direct you.

2 beeps: ZERO PAGE RAM failure. Check 6532 RAM I.O. Timer Array at location 7B on the board.

3 beeps: (will not occur)

4 beeps: ROM failure

5 beeps: INTERRUPT failure. Check 6532 at location 7B.

In addition, this message appears during power up **only** if the Audio Board needs to be checked:

AUDIO SELF TEST ERROR

or

AUDIO COMMUNICATION ERROR

3.2 CONTROL AND COLOR TEST MODE

If desired, you may test all player controls and screen colors. To do so, activate either coin switch at power-up. The game then enters the Control/Color Test Mode. This mode lasts for seven minutes to give you time to test and make adjustments. After that, the Attract Mode begins.

In the Control/Color Test Mode, the screen shows this pattern:

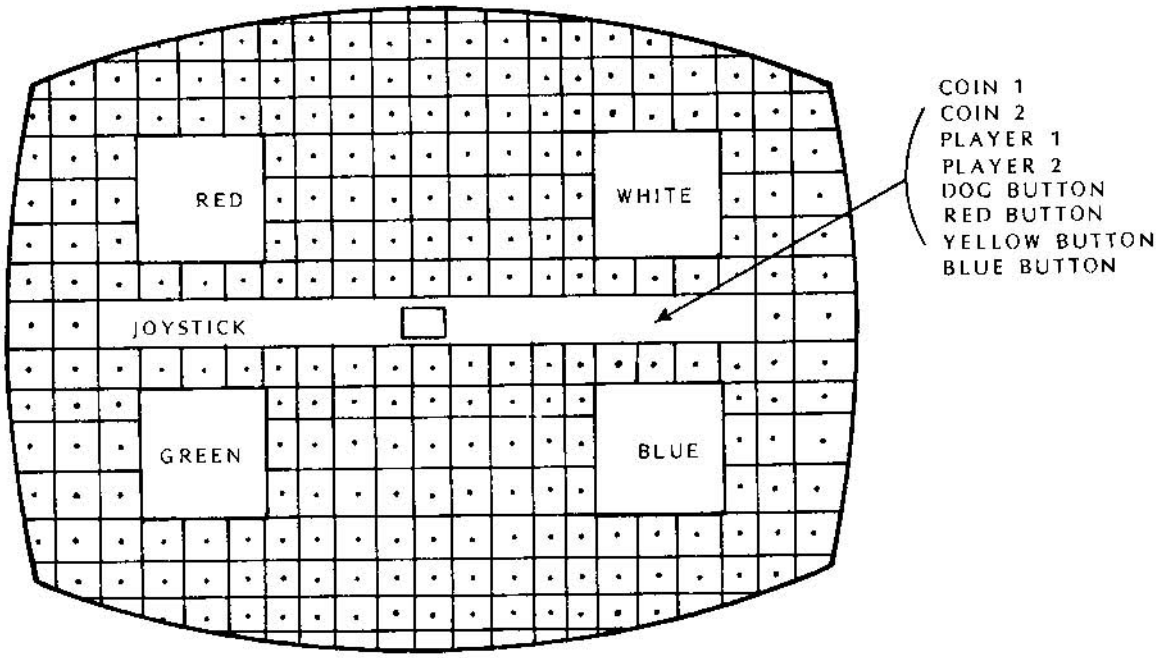

The grid pattern tests your screen for any distortion or convergence.

The solid blocks of color (red, white, green, and blue) allow you to adjust the color. When any player control (player 1 start, player 2 start, or red, blue, yellow, or Dog button) or coin switch (coin 1 or coin 2) is activated, its name appears below the white box. This shows that the switch connection is proper. When the joystick is activated, the message Joystick appears below the red box. Also, in the middle of the screen, a square indicates the joystick direction.

4.0 NORMAL OPERATION

4.1 ATTRACT MODE

After the MOUSE TRAP™ is powered up and the self- diagnostic test is performed, the Attract Mode starts up, showing the following messages:

MOUSETRAP™

CREDITS 00

ONE COIN FOR ONE CREDIT

ONE CREDIT FOR ONE PLAYER
TWO CREDITS FOR TWO PLAYERS

EXIDY

(P) COPYRIGHT 1981 (C)

The number of coins or any currency per game is operator selectable and the message will reflect that choice.

MOUSETRAP HALL OF FAME

LWH	49720	INCREDIBLE
DJS	47340	FABULOUS
VIC	44130	GREAT
MRK	37830	SUPER
HAI	25650	GOOD

JOIN THE MOUSETRAP HALL OF FAME
BY ENTERING YOUR INITIALS
FOR A HIGH SCORE

At power up, this Hall of Fame contains ficticious high scores. The first player to exceed the lowest score may enter his score and initials. The Hall of Fame will show the high player's score until power is turned off, and then the ficticious scores reappear.

The following game instructions appear, in pictorial form:

MOUSE EATS CHEESE, BONES, TREASURES

DOG EATS CAT, CHEESE, BONES, TREASURES

CAT EATS MOUSE

HAWK EATS MOUSE AND DOG

IN MAKES HAWK STUPID

BONE TURNS MOUSE INTO DOG
WHEN YOU USE THE DOG BUTTON

A few seconds of game play is then shown and the Attract Mode cycle begins again.

4.2 Game Play

Despite many cats on the prowl, the player steers a mouse through a playfield of halls where the mouse chomps cheese for points and finds other red prizes for bonus value.

The mouse searches out dog bones which are accumulated at the top of the screen. Each bone allows the mouse to become a ferocious dog when the "dog button" on the control panel is pressed. Now the player is the aggressor, and cats are open game for additional points of escalating value. After several seconds, the red dog begins blinking blue. This warns that his power is wearing off and he'll soon be a mere mouse again.

When all the cheese morsels on one level are eaten up, the player is given another game field with more challenge.

Randomly, a purple hawk flies over the walls in search of a delicious mouse or dog. The player's only defense is to enter the secret passage marked "in" at the center of the screen. This quickly transports the mouse or dog through an unseen tunnel to one of the four corners. This tactic makes the hawk "dumb", or aimless in his flight. The mouse or dog can then escape the hawk.

The player has the added strategy of doors to open and shut to his advantage. At the touch of a button, the player may open or close three colors of doors. By closing a door, the mouse can block a cat's advance. Or, when the mouse turns into a dog, the skilled player can use the doors to trap cats, earning additional points of escalating value for each one overtaken.

4.3 BONUS TURN FEATURE

An extra turn is given to a player everytime he scores 30,000, 40,000, 50,000, or 60,000 (operator selectable) points. A good player may rack up any number of bonus turns throughout a game, but the screen does not display more than five.

4.4 ENTERING THE MOUSE TRAP™ HALL OF FAME

Anytime a player's score exceeds one of the five current high scores, he is eligible to enter his initials in the Vanity Table. If both players of a two player game are record high scorers, the highest of the two is first invited to enter his initials. To do so, he directs the mouse around an alphabet chart with the joystick. Once on the letter desired, he hits the DOG button. The RUB feature allows a player to erase mistaken letters. Once the correct initials are keyed in, the player should go to END, and hit the DOG button. This will log in his initials, and return to the next mode.

The Hall of Fame Mode runs on a timer. If a player does not enter his or her initials , the Attract Mode eventually takes over.

LOGIC BOARD ASSEMBLY PARTS LIST

PART NUMBER	DESCRIPTION
177-3391-14	Logic PCB Assembly
77-3391-14	Logic PCB
58-0002-00	Spacer
100-0005-00	Ribbon Cable Assembly
22-0001-02	I.C. 74LS00
22-0002-02	I.C. 74LS02
22-0003-02	I.C. 74LS04
22-0004-00	I.C. 7407
22-0005-02	I.C. 74LS08
22-0006-02	I.C. 74LS11
22-0007-02	I.C. 74LS20
22-0008-02	I.C. 74LS21
22-0009-02	I.C. 74LS27
22-0010-02	I.C. 74LS32
22-0011-02	I.C. 74LS74
22-0012-02	I.C. 74LS112
22-0013-02	I.C. 74LS138
22-0214-02	I.C. 74LS139
22-0015-02	I.C. 74LS157
22-0016-02	I.C. 74LS161
22-0017-02	I.C. 74LS166
22-0018-02	I.C. 74LS193
22-0019-02	I.C. 74LS241
22-0020-02	I.C. 74LS245
22-0021-02	I.C. 74LS374
25-0001-00	I.C. MICROPROCESSOR 6502A
23-0001-00	6301 PROM
23-0002-00	6331 PROM
23-0003-00	6331 PROM
20-0001-00	IN4002 DIODE
02-4712-00	RESISTOR, 470 OHM 1/4W 5%
02-1222-00	RESISTOR, 1.2K 1/4W 5%
02-2222-00	RESISTOR, 2.2K 1/4W 5%
02-3322-00	RESISTOR, 3.3K 1/4W 5%
09-2212-00	RESISTOR, 220 OHM 1/8W 5% 10 PIN SIP
09-2222-00	REISTOR, 2.2K 1/8W 5% 10 PIN SIP
09-4722-00	RESISTOR, 4.7K 1/8W 5% 10 PIN SIP
09-6822-00	RESISTOR, 6.8K 1/8W 5% 10 PIN SIP
10-1034-1	CAPACITOR, .01 UF CERAMIC DISC
10-1044-1	CAPACITOR, .1 UF CERAMIC DISC
11-6853-0	CAPACITOR, 6.8 UF 25V DIPTANT
13-4775-0	CAPACITOR, 470UF 10V ELECTROLYTIC
47-0001-00	DIPSHUNT JUMPER PAKS 16 PIN
49-5002-00	DIP SWITCH 8 POSITION
29-0001-00	CRYSTAL 11.289MHZ (SERIES)
44-1601-00	DIP SOCKETS 16 PIN LOW PROFILE
44-2401-00	DIP SOCKETS 24 PIN LOW PROFILE
44-4001-00	DIPSOCKETS 40 PIN LOW PROFILE
44-1401-00	DIP SOCKETS 14 PIN LOW PROFILE
44-1801-00	DIP SOCKETS 18 PIN LOW PROFILE
11-1053-00	CAPACITOR 1UF 25V DIPTANT
02-2212-00	RESISTOR, 220 OHM 1/4W 5%

LOGIC BOARD ASSEMBLY PARTS LIST (continued)

PART NUMBER	DESCRIPTION
02-1802-00	RESISTOR, 18 OHM 1/4W 5%
10-3314-4	CAPACITOR, 330PF CERAMIC DISC
02-4732-00	RESISTOR, 47K
11-1063-00	10UF 16V DIPTANT
23-0004-00	2732, EPROM
23-0005-00	2716, EPROM
23-0006-00	2114 STATIC RAM
02-1822-00	RESISTOR, 1.8K 1/4W 5%
02-2272-00	RESISTOR, 2.7K 1/4W 5%
02-1052-00	RESISTOR, 1M 1/4W 5%
27-0003-00	I.C., OSC NE555
20-0006-00	DIODE, 4454
23-0014-00	2732, EPROM
23-0015-00	2732, EPROM
23-0016-00	2732, EPROM
23-0017-00	2732, EPROM
23-0018-00	2732, EPROM

AUDIO/COLOR BOARD ASSEMBLY

PART NUMBER	DESCRIPTION
177-3392-14	AUDIO/COLOR PCB ASSEMBLY
77-3392-14	AUDIO/COLOR PCB
22-0013-00	I.C. 74LS138
26-0001-00	I.C. 6520-A
22-0023-00	I.C. 4069
22-0003-02	I.C. 74LS04
22-0001-02	I.C. 74LS00
22-0021-02	I.C. 74LS374
22-0024-00	I.C. 4053
22-0025-00	I.C. 4175
22-0011-02	I.C. 74LS74
22-0026-00	I.C. LM324
22-0027-02	I.C. 74LS86
22-0028-00	I.C. 4051
22-0014-02	I.C. 74LS139
22-0029-02	I.C. 74LS148
22-0030-02	I.C. 74LS151
22-0031-02	I.C. 74LS174
10-1044-1	CAPACITOR, .1 UF CERAMIC
10-2204-1	CAPACITOR, 22PF 16V CERAMIC
10-1034-1	CAPACITOR, .01UF 16V CERAMIC
13-3365-1	CAPACITOR, 33UF 25V ELECTROLYTIC
13-1075-00	CAPACITOR, 100UF 16V ELECTROLYTIC
13-4755-00	CAPACITOR, 4.7UF 16V ELECTROLYTIC
02-3332-00	RESISTOR, 33K 1/4W 5%
02-3322-00	RESISTOR, 3.3K 1/4W 5%
02-1062-00	RESISTOR, 10M 1/4W 5%
02-3012-00	RESISTOR, 300 OHM 1/4W 5%
02-1802-00	RESISTOR, 18 1/4W 5%
02-2232-00	RESISTOR, 22K 1/4W 5%
02-2722-00	RESISTOR, 2.7K 1/4W 5%

AUDIO/COLOR BOARD ASSEMBLY (continued)

PART NUMBER	DESCRIPTION
02-1322-00	RESISTOR, 1.3K 1/4W 5%
02-6812-00	RESISTOR, 680 OHM 1/4W 5%
02-3312-00	RESISTOR, 330 OHM 1/4W 5%
02-1612-00	RESISTOR, 160 OHM 1/4W 5%
02-8202-00	RESISTOR, 82 OHM 1/4W 5%
02-3902-00	RESISTOR, 39 OHM 1/4W 5%
02-1032-00	RESISTOR, 10K 1/4W 5%
07-1034-00	10K POT
29-0002-00	3.579545 MHZ CRYSTAL
47-0001-00	16 PIN DIP SHUNT
44-1401-00	14 PIN DIP SOCKET
44-2401-00	24 PIN DIP SOCKET
44-2801-00	28 PIN DIP SOCKET
44-4001-00	40 PIN DIP SOCKET
44-1601-00	16 PIN DIP SOCKET
02-4712-00	RESISTOR, 470 OHM 1/4
02-2422-00	RESISTOR, 2.4K 1/4W
02-2032-00	RESISTOR, 20K 1/4W
02-1832-00	RESISTOR, 18K 1/4W
02-3922-00	RESISTOR, 3.9K 1/4W
02-2452-00	RESISTOR, 2.4M 1/4/W
22-0039-00	I.C. 74LS42
23-0007-00	2732 EPROM
23-0008-00	2732 EPROM
23-0009-00	2732 EPROM
10-2034-01	CAPACITOR .02 uf CER.
23-0010-00	2732 EPROM
27-0003-00	NE555 OSC.
22-0033-00	TL081 OP/AMP
27-0004-00	MC3417L DELTA MOD
22-0034-00	40Q6 CMOS SHIFT REG.
40-0003-00	6 PIN MALE CONNECTOR .156 CENTER
22-0037-00	I.C. 74LS125
22-0015-00	I.C. 74LS157
22-0010-00	I.C. 74LS32
22-0038-00	I.C. 74LS367
25-0003-00	Z80 CPU
22-0035-00	4070 CMOS EXC. OR GATE
22-0036-00	LM741EN OP/AMP
02-5643-01	RESISTOR, .560K OHM 1/4W
84-0014-00	HEATSINK, THM6045
14-2044-00	CAPACITOR, MYLAR .2UF 16V
10-1024-00	CAPACITOR, CERAMIC .001UF 16V
09-0001-00	RESISTOR, 1.8K SIP PAC 8 PIN
09-0002-00	RESISTOR, 4.7K SIP PAC 8 PIN
21-0001-00	NPN TRANSISTOR TIP 120
21-0002-00	PNP TRANSISTOR, TIP 125
10-5024-01	CAPACITOR, MYLAR .0022 UF
14-2224-00	CAPACITOR, MYLAR .0022 uf
23-0011-00	2716, EPROM
23-0012-00	2716, EPROM
23-0013-00	2716, EPROM

AUDIO/COLOR BOARD ASSEMBLY (continued)

PART NUMBER	DESCRIPTION
13-3355-01	CAPACITOR .33 uf 16V ELECTROLYTIC
40-0004-00	CONNECTOR, PCB MALE
25-0002-00	I.C. 6532
25-0004-00	I.C. 6502
27-0001-00	I.C. 6840
22-0022-02	I.C. 74LS154
27-0002-00	I.C. 8253

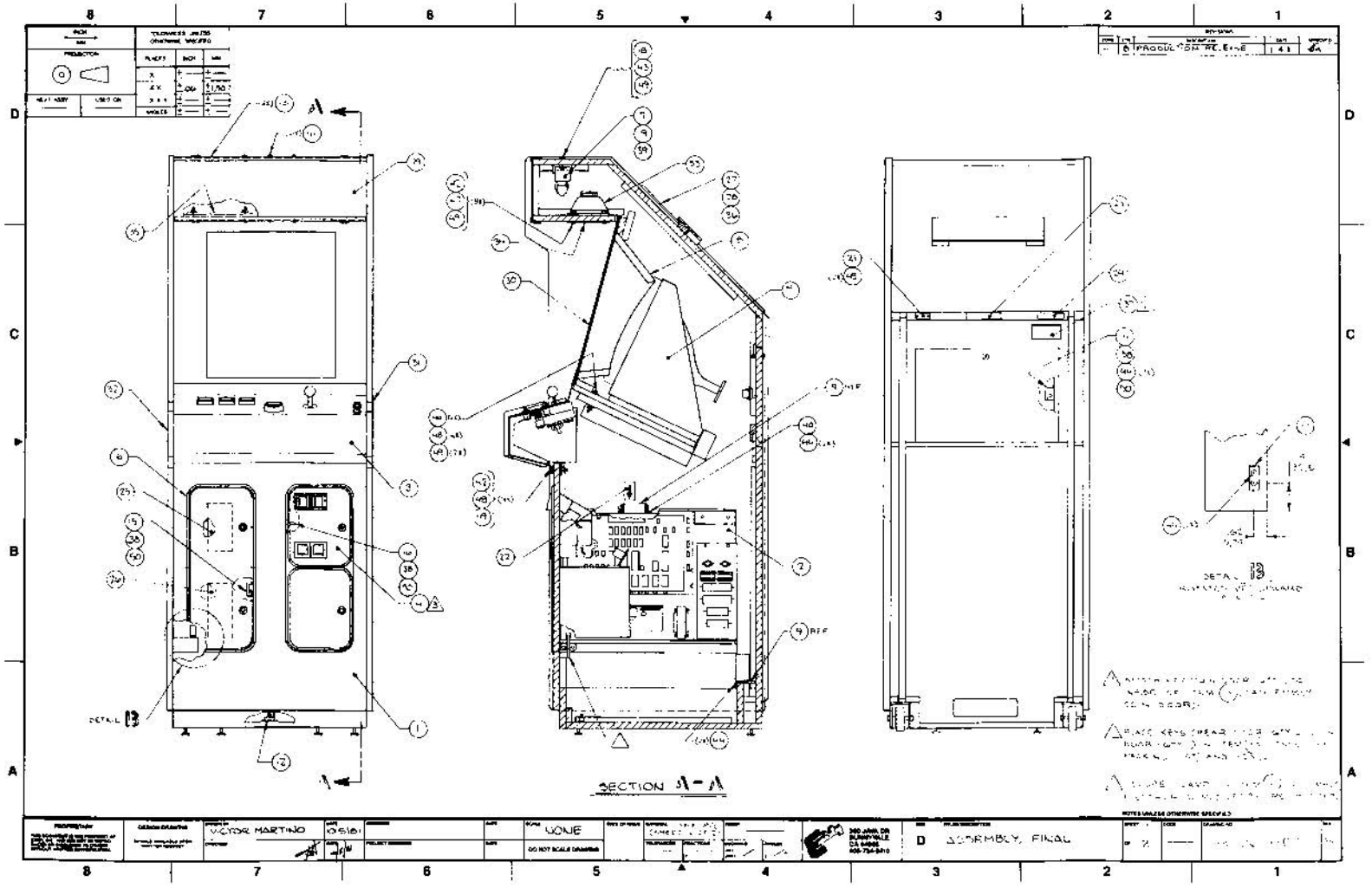
SECTION A-A
DETAIL B
DETAIL B
VICTOR MARTINO
DO NOT SCALE DRAWING
D ASSEMBLY, FINAL

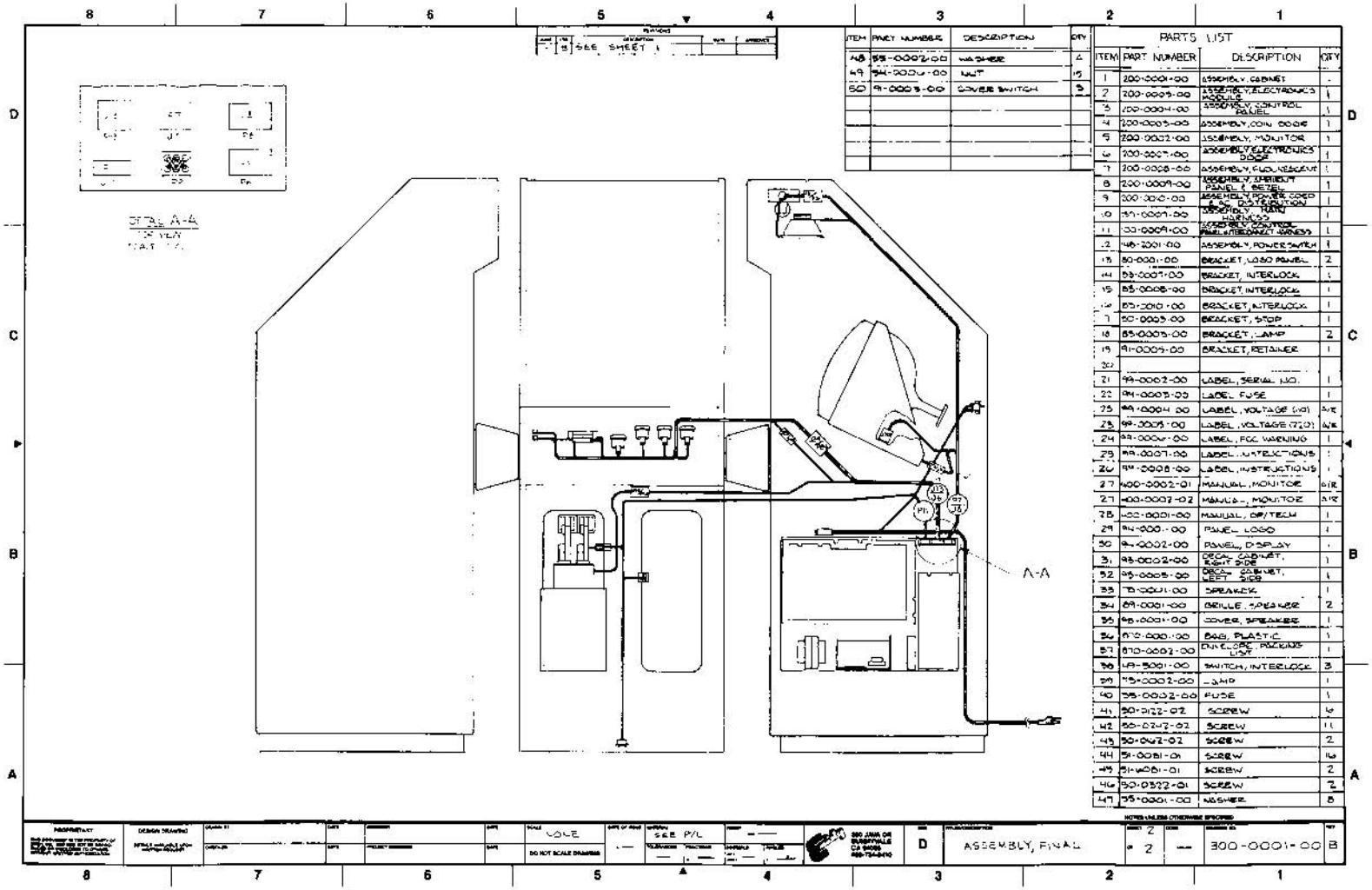

ITEM	PART NUMBER	DESCRIPTION	QTY
48	55-0002-00	WASHER	4
49	54-0006-00	NUT	15
50	91-0003-00	COVER SWITCH	3

PARTS LIST

ITEM	PART NUMBER	DESCRIPTION	QTY
1	200-0001-00	ASSEMBLY, CABINET	-
2	200-0003-00	ASSEMBLY, ELECTRONICS MODULE	1
3	200-0004-00	ASSEMBLY, CONTROL PANEL	1
4	200-0005-00	ASSEMBLY, COIN DOOR	1
5	200-0002-00	ASSEMBLY, MONITOR	1
6	200-0007-00	ASSEMBLY, ELECTRONICS DOOR	1
7	200-0008-00	ASSEMBLY, FLOURESCENT	1
8	200-0009-00	ASSEMBLY, AMBIENT PANEL & BEZEL	1
9	200-0010-00	ASSEMBLY, POWER CORD & AC DISTRIBUTION	1
10	100-0007-00	ASSEMBLY, MAIN HARNESS	1
11	100-0009-00	ASSEMBLY, CONTROL PANEL INTERCONNECT HARNESS	1
12	148-2001-00	ASSEMBLY, POWER SWITCH	1
13	80-0001-00	BRACKET, LOGO PANEL	2
14	83-0007-00	BRACKET, INTERLOCK	1
15	83-0008-00	BRACKET, INTERLOCK	1
16	83-0010-00	BRACKET, INTERLOCK	1
17	80-0003-00	BRACKET, STOP	1
18	85-0003-00	BRACKET, LAMP	2
19	91-0005-00	BRACKET, RETAINER	1
20			
21	99-0002-00	LABEL, SERIAL NO.	1
22	99-0003-00	LABEL, FUSE	1
23	99-0004-00	LABEL, VOLTAGE (110)	A/R
23	99-0005-00	LABEL, VOLTAGE (220)	A/R
24	99-0006-00	LABEL, FCC WARNING	1
25	99-0007-00	LABEL, INSTRUCTIONS	1
26	99-0008-00	LABEL, INSTRUCTIONS	1
27	400-0002-01	MANUAL, MONITOR	A/R
27	400-0002-02	MANUAL, MONITOR	A/R
28	400-0001-00	MANUAL, OP/TECH	1
29	94-0001-00	PANEL, LOGO	1
30	94-0002-00	PANEL, DISPLAY	1
31	93-0002-00	DECAL CABINET, RIGHT SIDE	1
32	93-0005-00	DECAL CABINET, LEFT SIDE	1
33	78-0001-00	SPEAKER	1
34	89-0001-00	GRILLE, SPEAKER	2
35	98-0001-00	COVER, SPEAKER	1
36	870-0001-00	BAG, PLASTIC	1
37	870-0002-00	ENVELOPE, PACKING LIST	1
38	49-5001-00	SWITCH, INTERLOCK	3
39	75-0002-00	LAMP	1
40	55-0002-00	FUSE	1
41	50-0122-02	SCREW	6
42	50-0242-02	SCREW	11
43	50-0462-02	SCREW	2
44	51-0081-01	SCREW	16
45	51-6081-01	SCREW	2
46	50-0322-01	SCREW	2
47	55-0001-00	WASHER	8

NOTES UNLESS OTHERWISE SPECIFIED

PROPRIETARY	DESIGN DRAWING	DRAWN BY	DATE	DESIGNER	DATE	SCALE NONE	DATE OF ISSUE	WORKING SEE P/L	PROJECT	300 JAVA DR SUNNYVALE CA 94086 408-734-8410	SIZE D	TITLE/DESCRIPTION ASSEMBLY, FINAL	SHEET 2 OF 2	CODE —	DRAWING NO. 300-0001-00	REV B
		CHECKED	DATE	PROJECT ENGINEER	DATE	DO NOT SCALE DRAWING		TOLERANCES	FRACTIONS							

✓	B	PRODUCTION RELEASE	[illegible]	[illegible]
—	C	REVISED PER ECN 100298	[illegible]	[illegible]
—	D	REVISED PER ECN 100316	[illegible]	[illegible]
—	E	REVISED PER ECN 00345	[illegible]	[illegible]

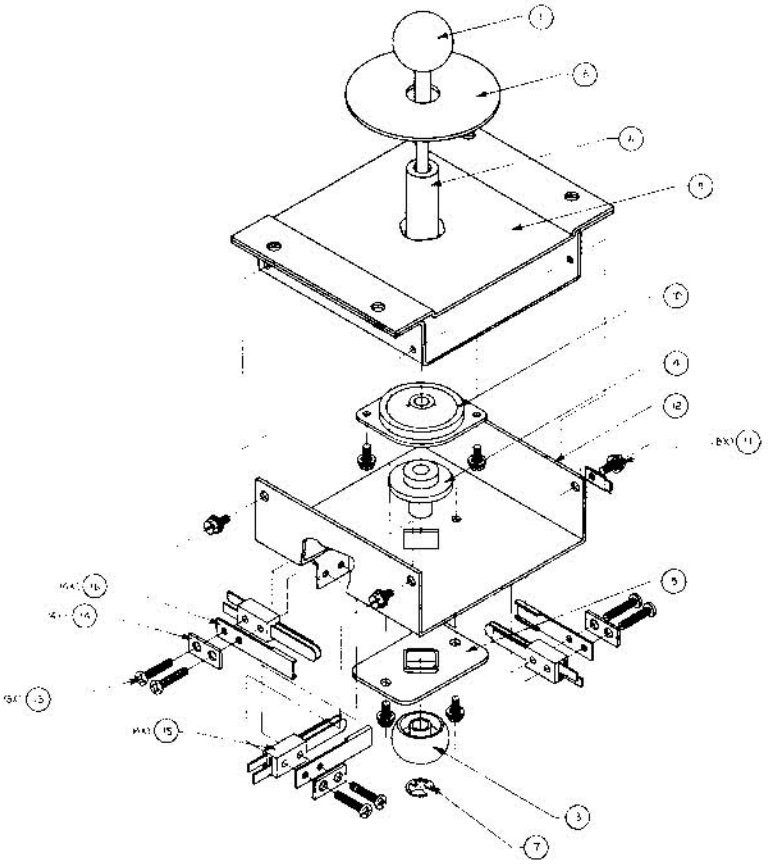

PARTS LIST

ITEM	PART NUMBER	DESCRIPTION	QTY
1	00-0012-00	ASSEMBLY, HANDLE	1
2			
3	92-0002-00	ACTUATOR	1
4	92-0003-00	BEARING	1
5	92-0004-00	PLATE, DETENT	1
6	58-0001-00	SPACER	1
7	59-0002-00	E-RING	1
8	92-0005-00	PLATE, DECORATIVE	1
9	184-0007-00	ASSEMBLY, TOP PLATE	1
10	59-0004-00	ISOLATION, MOUNT	1
11	[illegible]	SCREW	8
12	184-0009-00	ASSEMBLY, BOTTOM PLATE	1
13	[illegible]	SCREW	2
14	[illegible]	PLATE, SPACER	4
15	[illegible]	[illegible]	4
16	[illegible]	[illegible], NYLON	4

PROJECTION

10-5-81	1/1	SEE P/L	D

DO NOT SCALE DRAWING

ASSEMBLY, JOYSTICK

100-0012-00

E

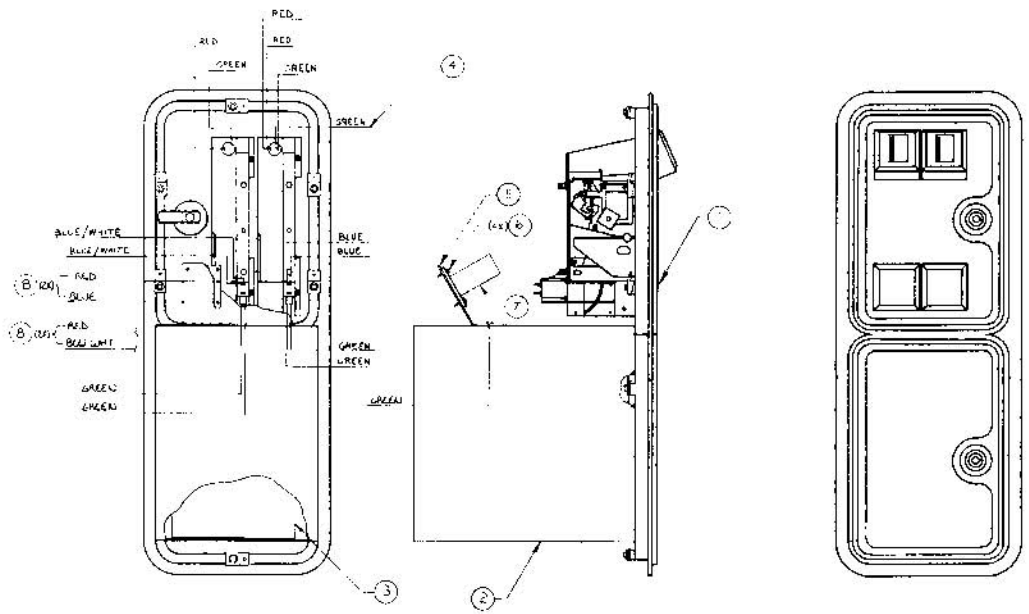

PARTS LIST

ITEM	PART NUMBER	DESCRIPTION	QTY
1	76-0001-00	COIN DOOR	1
2	84-0002-00	ENCLOSURE, COIN BOX	1
3	84-0003-00	BOX, COIN	1
4	137-0001-00	ASSEMBLY, COIN DOOR HARNESS	1
5	83-0002-00	BRACKET, COUNTER	1
6	52-6041-01	SCREW	4
7	75-0001-00	COUNTER	1
8	45-0002-00	BUTT SPLICE	4

REV	DESCRIPTION	DATE	APPROVED
B	PRODUCTION RELEASE	10-30-81	

PROPRIETARY

DESIGN DRAWING

SCALE 1/2

DO NOT SCALE DRAWING

SEE PIL

D

ASSEMBLY, COIN DOOR

#1

200-0003-00

B

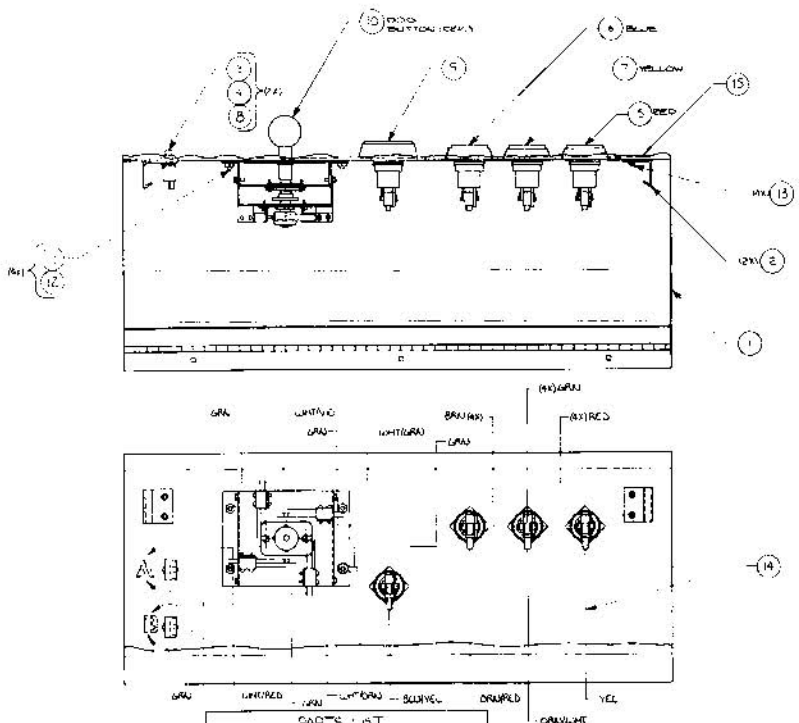

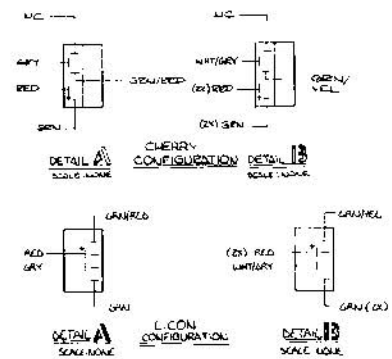

3. THE FINISHED PANEL SHALL BE FREE FROM DEFECTS WHICH DEGRADE THE OVERALL APPEARANCE. SCRATCHES, ABRASIONS, OR OTHER SURFACE IMPERFECTIONS ARE POSSIBLE CAUSE FOR REJECTION OF PART.

2. THE BOND BETWEEN FILM AND METAL PANEL SHALL BE PERMANENT. ALL SURFACES, CORNERS, & EXPOSED EDGES SHALL BE SECURELY ADHERED. THE FINISHED PANEL SHALL BE FREE FROM DEFECTS WHICH COULD CONTRIBUTE TO PREMATURE DELAMINATION. TRAPPED CONTAMINANTS, CRACKS, BUBBLES, WRINKLES, OR BRIDGING IN CORNER RADII ARE PROBABLE CAUSE FOR REJECTION OF PARTS.

1. REGISTRATION OF FILM TO METAL PANEL SHALL BE WITHIN .03 OF THE CENTERLINE POSITIONING OF HOLE DETAILS. FILM OVERLAP AT EXPOSED EDGES OF PANEL SHALL NOT EXCEED .030. ALL HOLES OR PROFILE CUTOUTS SHALL BE CLEAR & FREE OF FILM OBSTRUCTION.

PARTS LIST

ITEM	PART NUMBER	DESCRIPTION	QTY	ITEM	PART NUMBER	DESCRIPTION	QTY
1	182-0001-00	ASSY CONTROL PANEL HINGE	1	8	91-0004-00	ACTUATOR, SWITCH	2
2	183-0004-00	ASSY LATCH BRACKET	2	9	54-0005-00	SWITCH	3
3	48-5001-00	SWITCH-LOCK/CHERRY	2	10	100-0012-00	ASSY. JOYSTICK	1
4	54-0012-00	NUT, SWITCH BEZEL	2	11	50-0081-02	SCREW	4
5	48-5002-00	SWITCH, RED	1	12	54-0013-00	NUT	4
6	48-5003-00	SWITCH, BLUE	1	13	50-6061-01	SCREW	4
7	48-5004-00	SWITCH, YELLOW	1	14	137-0004-00	ASSY CONTROL PANEL HARNESS	1
15	93-0001-00	OVERLAY CONTROL PANEL	1				

10-12-81	1/2	SEE P/L	
	DO NOT SCALE DRAWING		

D ASSEMBLY, CONTROL PANEL 200-0004-00

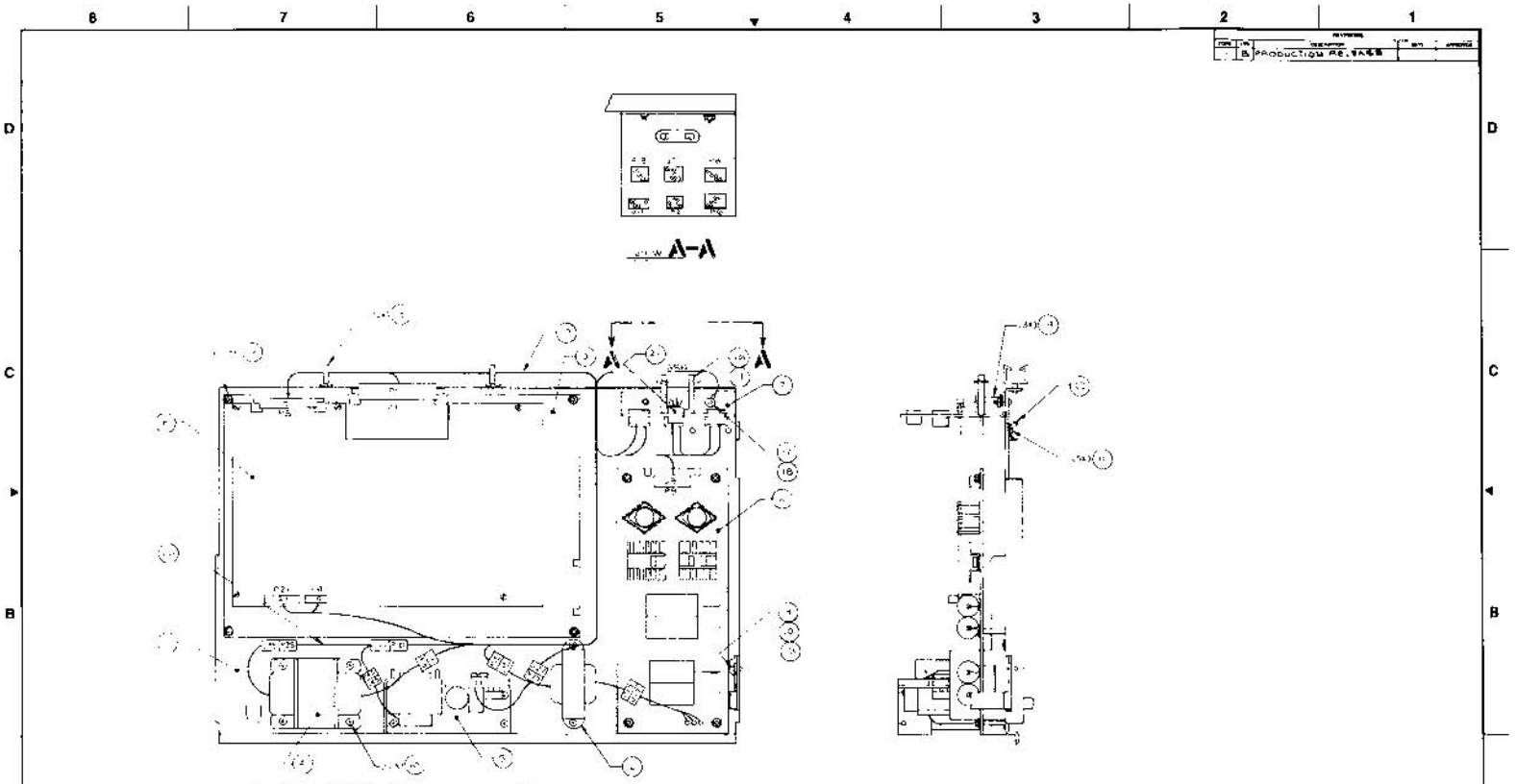

ITEM	PART NUMBER	DESCRIPTION	QTY
1	87-0001-00	ASSY, CONNECTOR HEAT	1
2	87-0002-00	ASSY, HEAT SINK	1
3	87-0003-00	ASSY, HEAT SINK	1
4	87-0004-00	ASSY, HEAT SINK	1
5	87-0005-00	ASSY, HEAT SINK	1
6	87-0006-00	ASSY, HEAT SINK	1
7	87-0007-00	ASSY, HEAT SINK	1
8	87-0008-00	ASSY, HEAT SINK	1
9	87-0009-00	ASSY, HEAT SINK	1
10	87-0010-00	ASSY, HEAT SINK	1
11	87-0011-00	ASSY, HEAT SINK	1
12	87-0012-00	ASSY, HEAT SINK	1
13	87-0013-00	ASSY, HEAT SINK	1
14	87-0014-00	ASSY, HEAT SINK	1
15	87-0015-00	ASSY, HEAT SINK	1
16	87-0016-00	ASSY, HEAT SINK	1
17	87-0017-00	ASSY, HEAT SINK	1
18	87-0018-00	ASSY, HEAT SINK	1
19	87-0019-00	ASSY, HEAT SINK	1
20	87-0020-00	ASSY, HEAT SINK	1
21	87-0021-00	ASSY, HEAT SINK	1
22	87-0022-00	ASSY, HEAT SINK	1
23	87-0023-00	ASSY, HEAT SINK	1

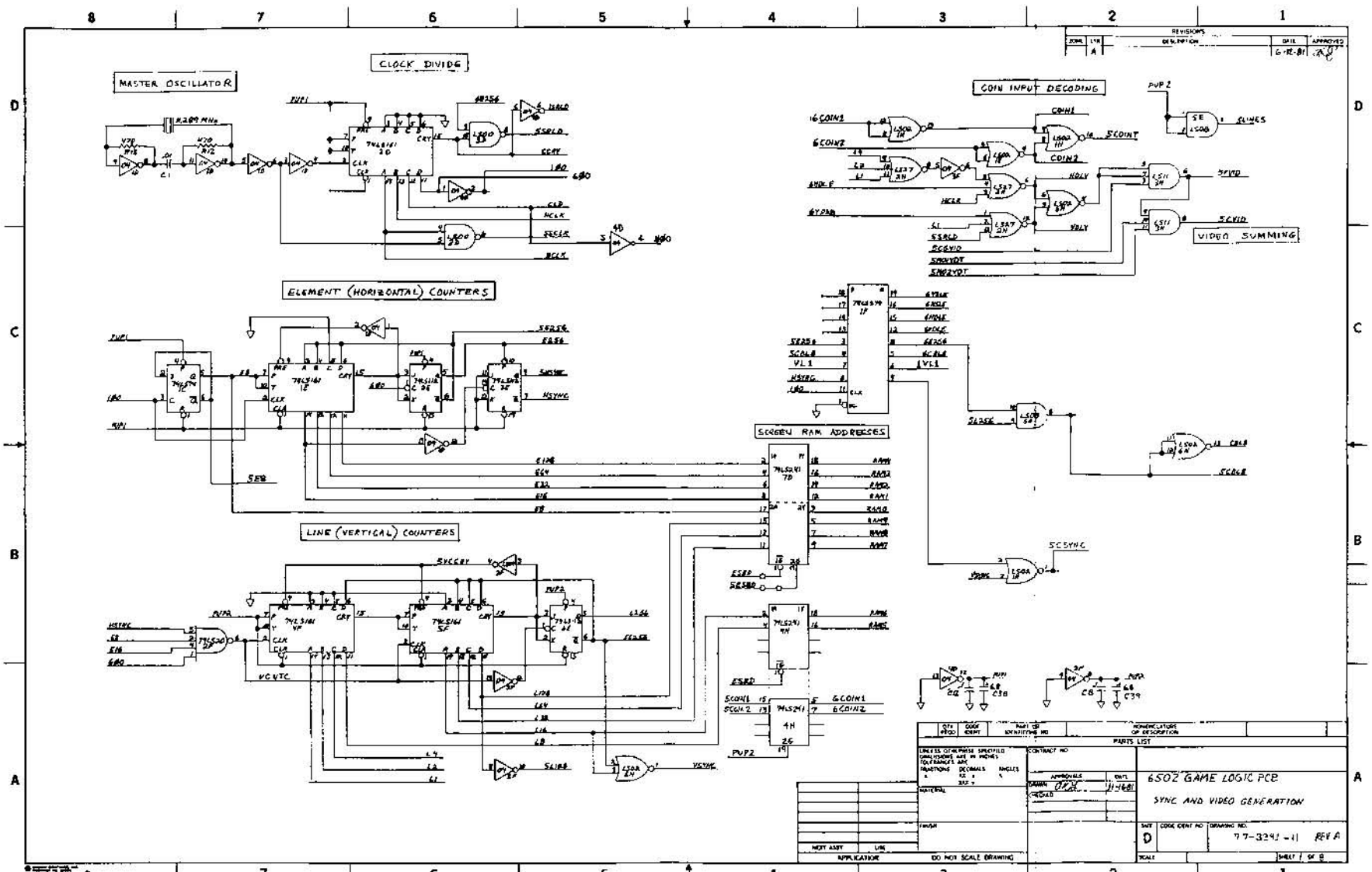
MASTER OSCILLATOR
CLOCK DIVIDE
COIN INPUT DECODING
VIDEO SUMMING
ELEMENT (HORIZONTAL) COUNTERS
LINE (VERTICAL) COUNTERS
SCREEN RAM ADDRESSES
6502 GAME LOGIC PCB
SYNC AND VIDEO GENERATION
77-3243-11 REV A
DO NOT SCALE DRAWING

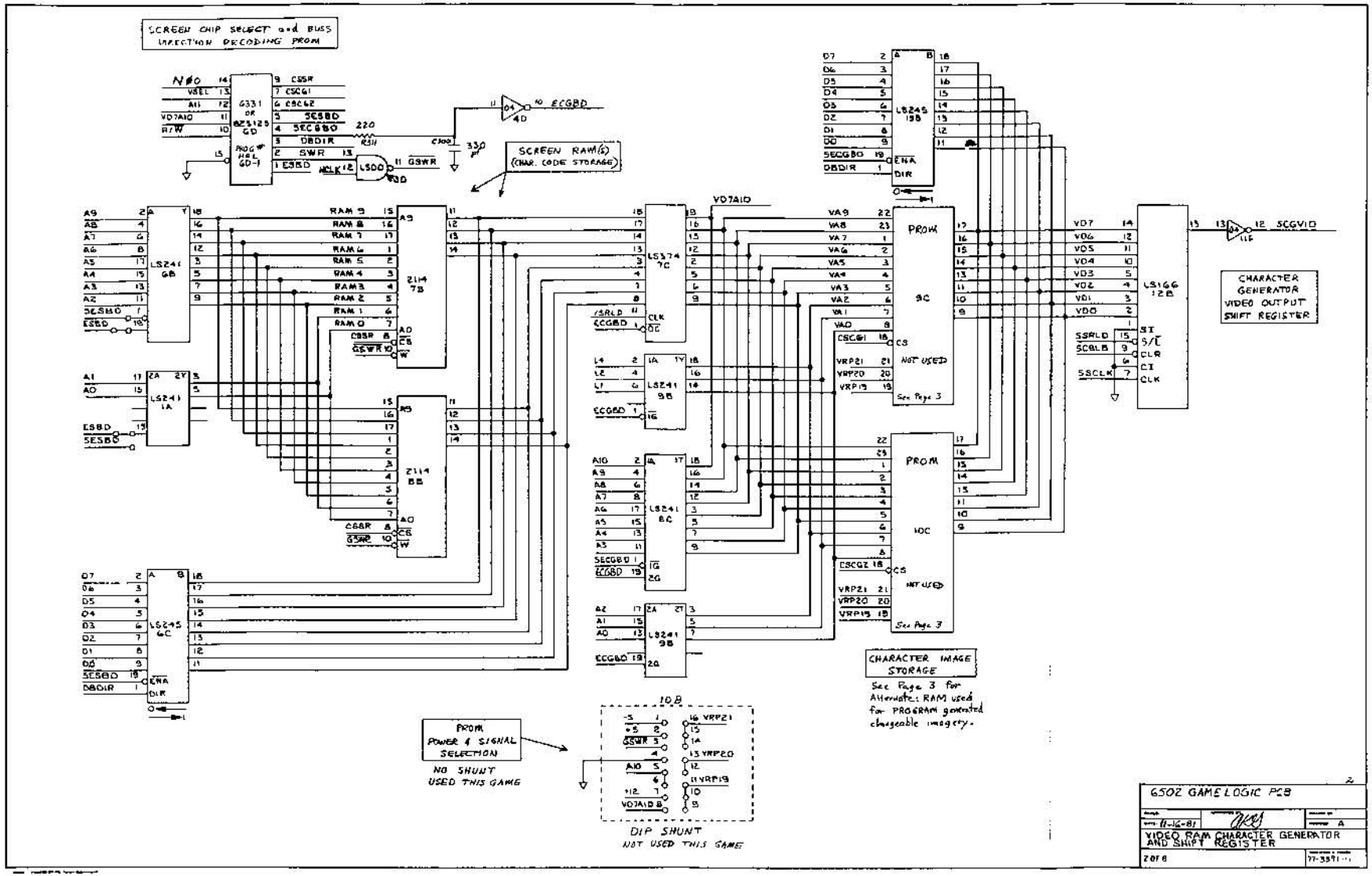
SCREEN CHIP SELECT and BUS DIRECTION DECODING PROM
SCREEN RAM(S) (CHAR. CODE STORAGE)
CHARACTER GENERATOR VIDEO OUTPUT SHIFT REGISTER
CHARACTER IMAGE STORAGE
See Page 3 for Alternate: RAM used for PROGRAM generated changeable imagery.
PROM POWER & SIGNAL SELECTION
NO SHUNT USED THIS GAME
DIP SHUNT
NOT USED THIS GAME
G502 GAME LOGIC PCB
VIDEO RAM CHARACTER GENERATOR AND SHIFT REGISTER
11-16-81
2 OF 8

CHARACTER GENERATOR
IMAGE STORAGE RAMS

For use with PROGRAM generated changeable imagery.
ALL 2114'S ≤ 300ns

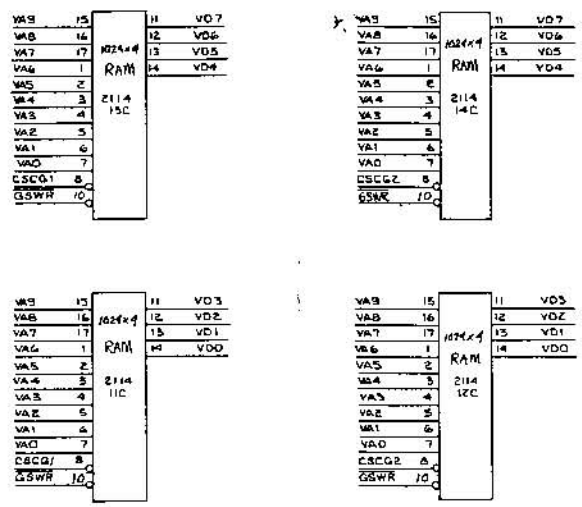

6502 GAME LOGIC PCB

11-16-81 AKG A

IMAGE STORAGE RAM

3 OF 8 11-3591-11

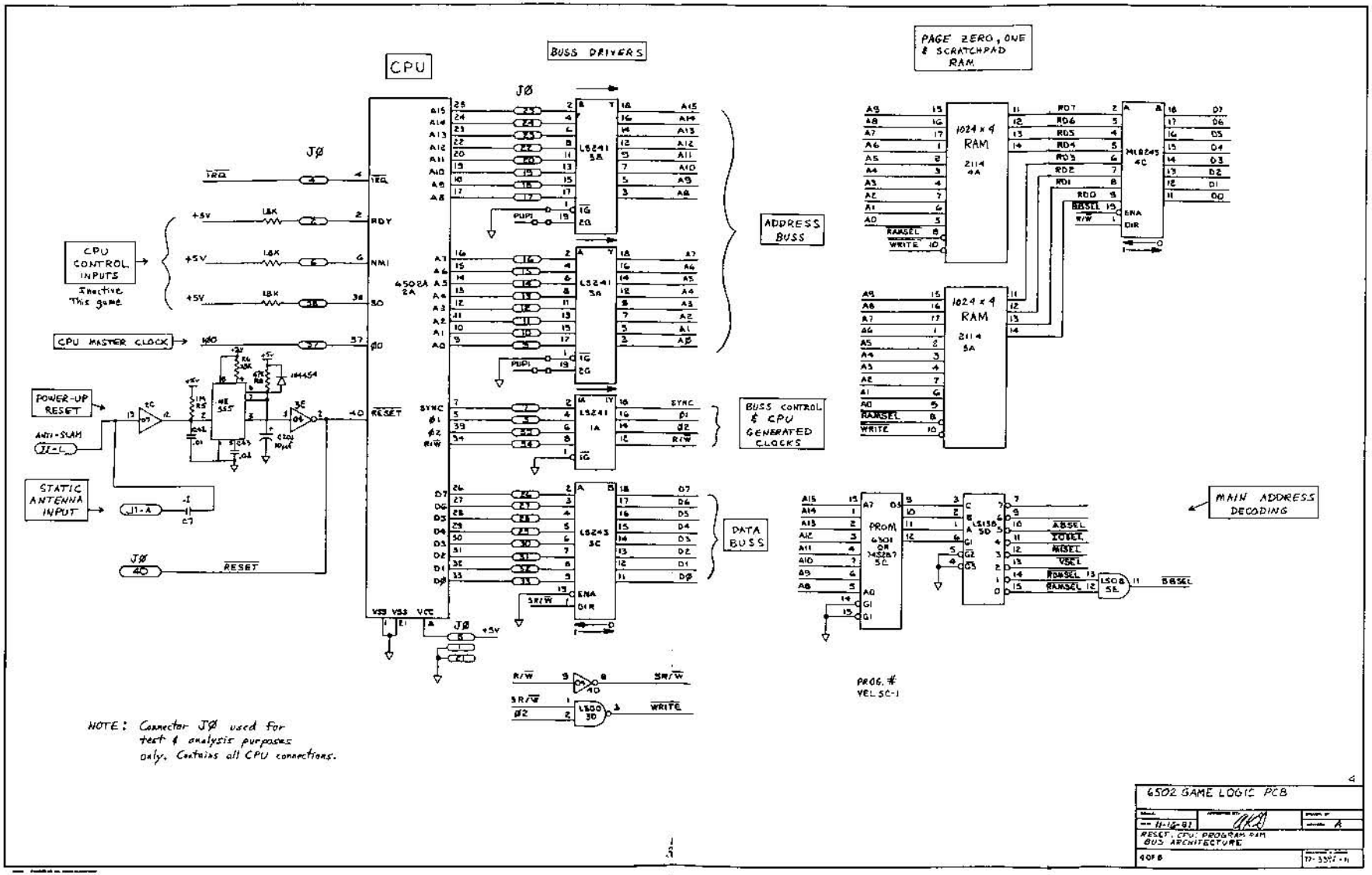

NOTE: Connector J0 used for test & analysis purposes only. Contains all CPU connections.

4

6502 GAME LOGIC PCB

11-16-82

RESET, CPU, PROGRAM RAM BUS ARCHITECTURE

4 OF 8

A

PROGRAM MEMORY

See TECHNICAL MANUAL for PROGRAM #'s.

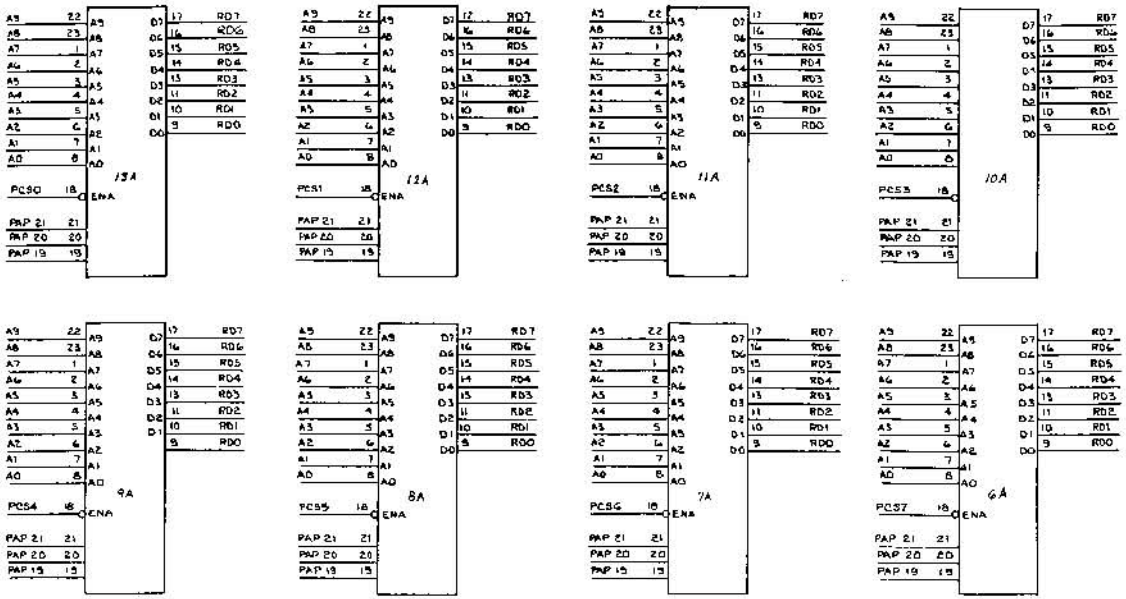

DATA BUSS TERMINATION

Ringing Suppression

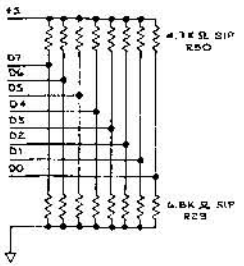

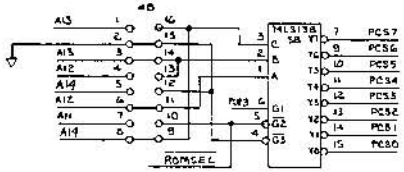

PROM ADDRESS SELECTION

Configuration Shown is For +5V ONLY 2732 EPROMS. See TECHNICAL MANUAL for configuration for other memory devices.

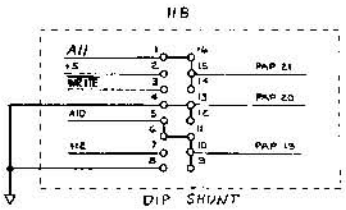

MEMORY DEVICE PERSONALITY SELECTION

Configuration shown is for +5V ONLY 2732 EPROMS. See TECHNICAL MANUAL for configuration for other memory devices.

EXIDY INC.

11-16-81

6502 GAME PCB'S

CPU ROM

5058

A

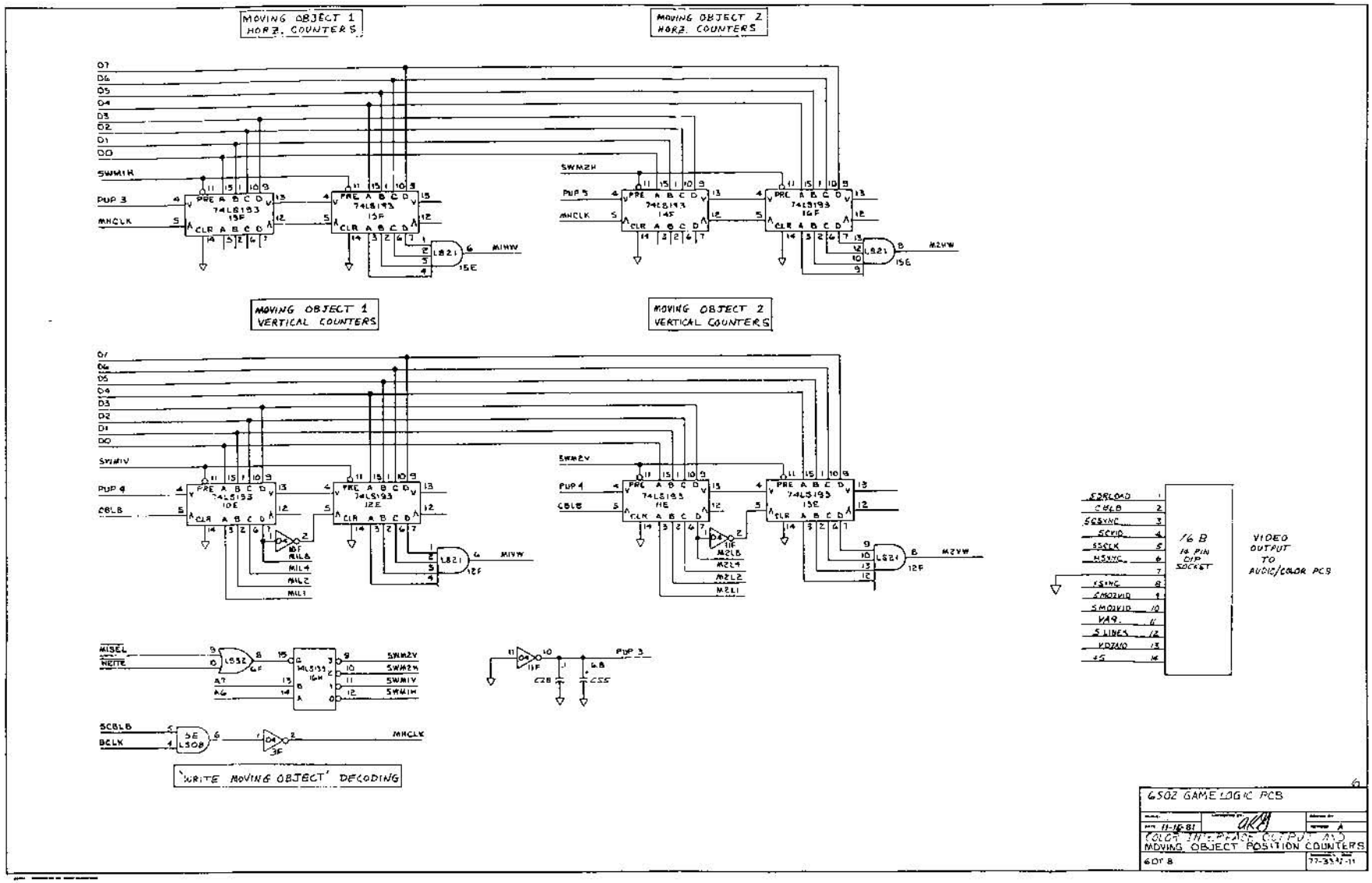
MOVING OBJECT 1
HORZ. COUNTERS
MOVING OBJECT 2
HORZ. COUNTERS
MOVING OBJECT 1
VERTICAL COUNTERS
MOVING OBJECT 2
VERTICAL COUNTERS
'WRITE MOVING OBJECT' DECODING
74LS193
16 B
14 PIN DIP SOCKET
VIDEO OUTPUT TO AUDIO/COLOR PCB
6502 GAME LOGIC PCB
11-16-81
COLOR INTERFACE OUTPUT AND
MOVING OBJECT POSITION COUNTERS
6 OF 8
77-3342-11

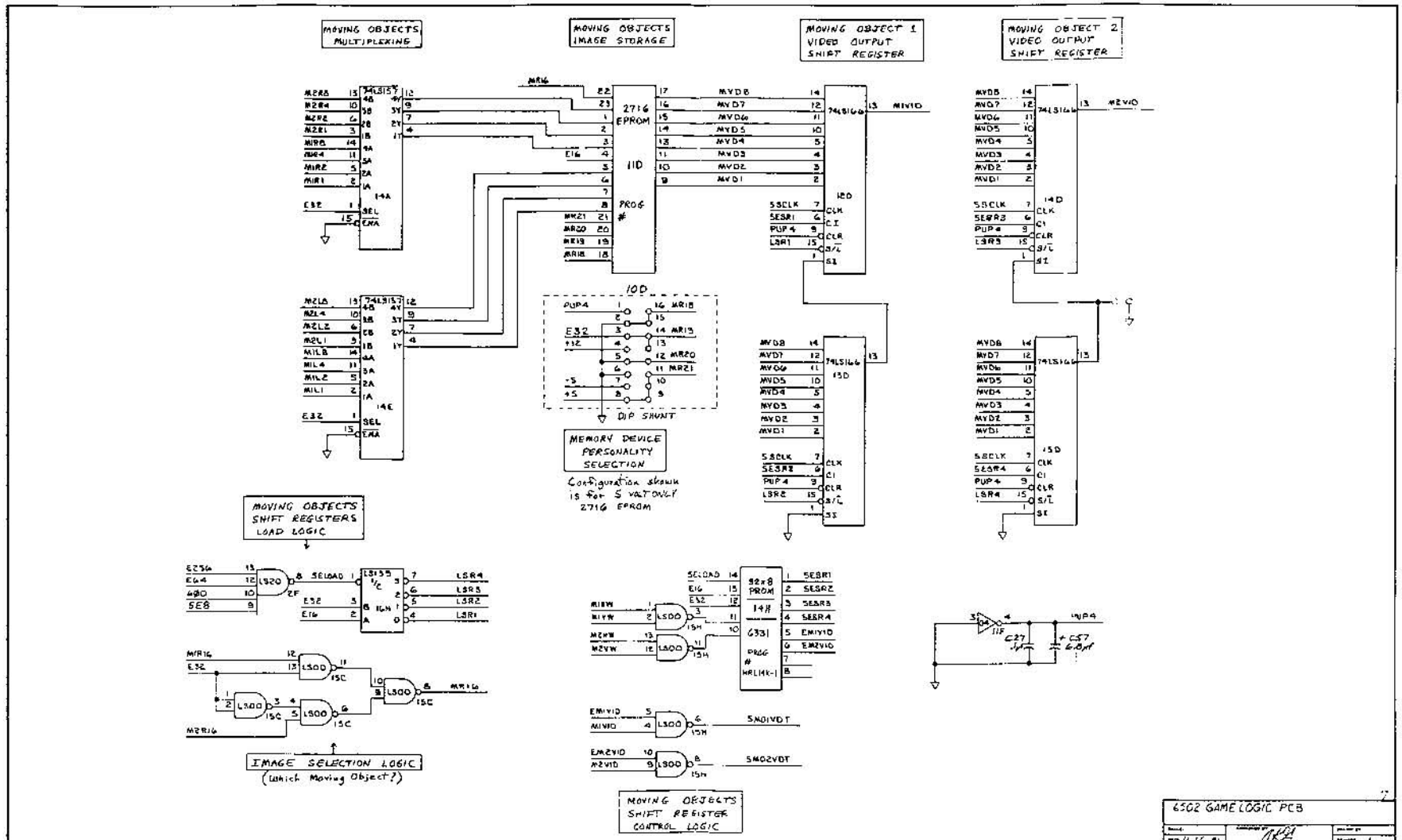
MOVING OBJECTS MULTIPLEXING
MOVING OBJECTS IMAGE STORAGE
MOVING OBJECT 1 VIDEO OUTPUT SHIFT REGISTER
MOVING OBJECT 2 VIDEO OUTPUT SHIFT REGISTER
2716 EPROM
PROG #
DIP SHUNT
MEMORY DEVICE PERSONALITY SELECTION
Configuration shown is for 5 volt only 2716 EPROM
MOVING OBJECTS SHIFT REGISTERS LOAD LOGIC
IMAGE SELECTION LOGIC
(which Moving Object?)
MOVING OBJECTS SHIFT REGISTER CONTROL LOGIC
6502 GAME LOGIC PCB
MOVING OBJECT VIDEO GENERATION
7 OF 8

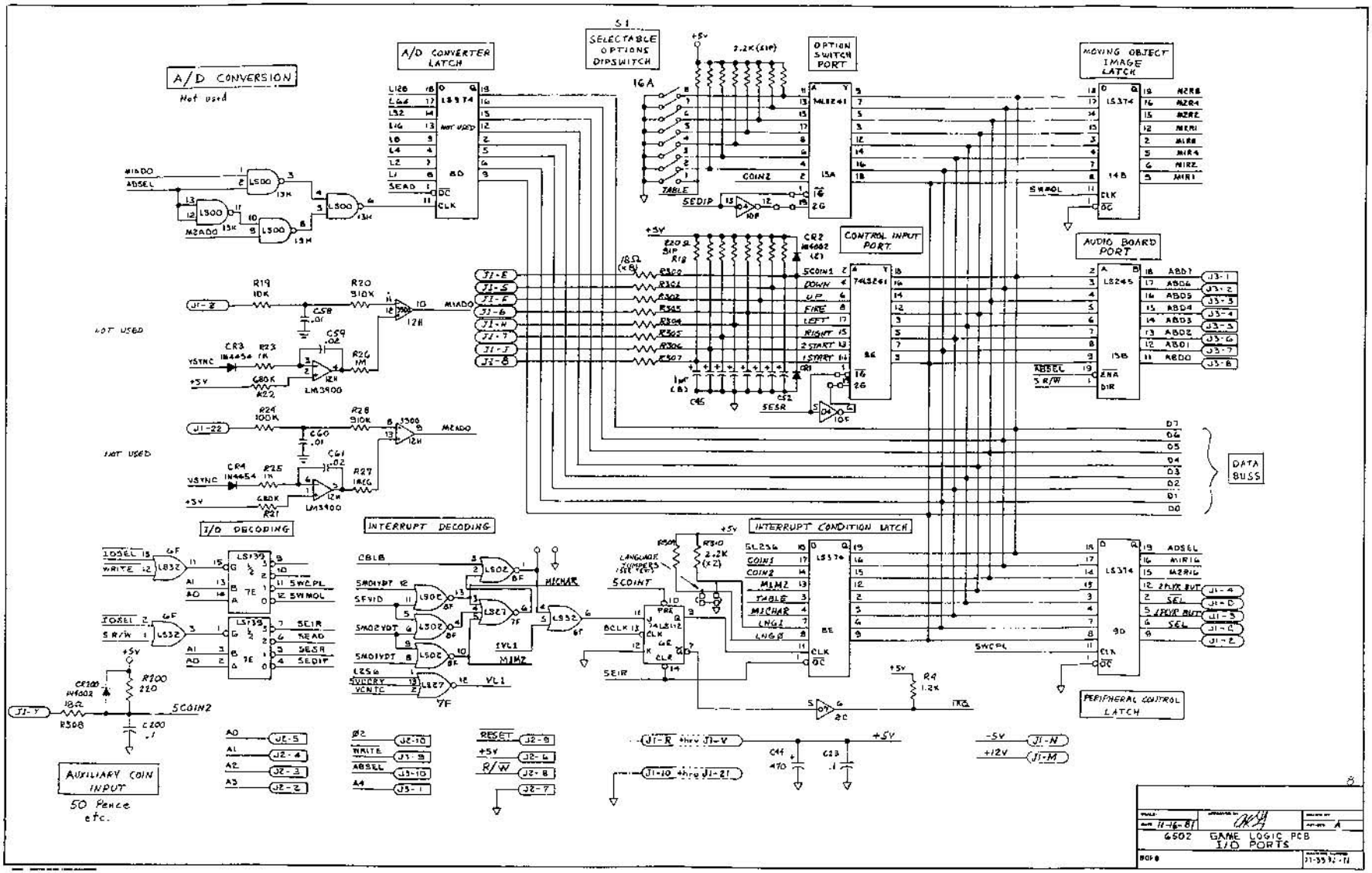
A/D CONVERSION
Not used
A/D CONVERTER LATCH
S1
SELECTABLE OPTIONS DIPSWITCH
OPTION SWITCH PORT
MOVING OBJECT IMAGE LATCH
CONTROL INPUT PORT
AUDIO BOARD PORT
NOT USED
NOT USED
DATA BUSS
I/O DECODING
INTERRUPT DECODING
INTERRUPT CONDITION LATCH
PERIPHERAL CONTROL LATCH
AUXILIARY COIN INPUT
50 Pence etc.
6502 GAME LOGIC PCB I/O PORTS
11-16-81

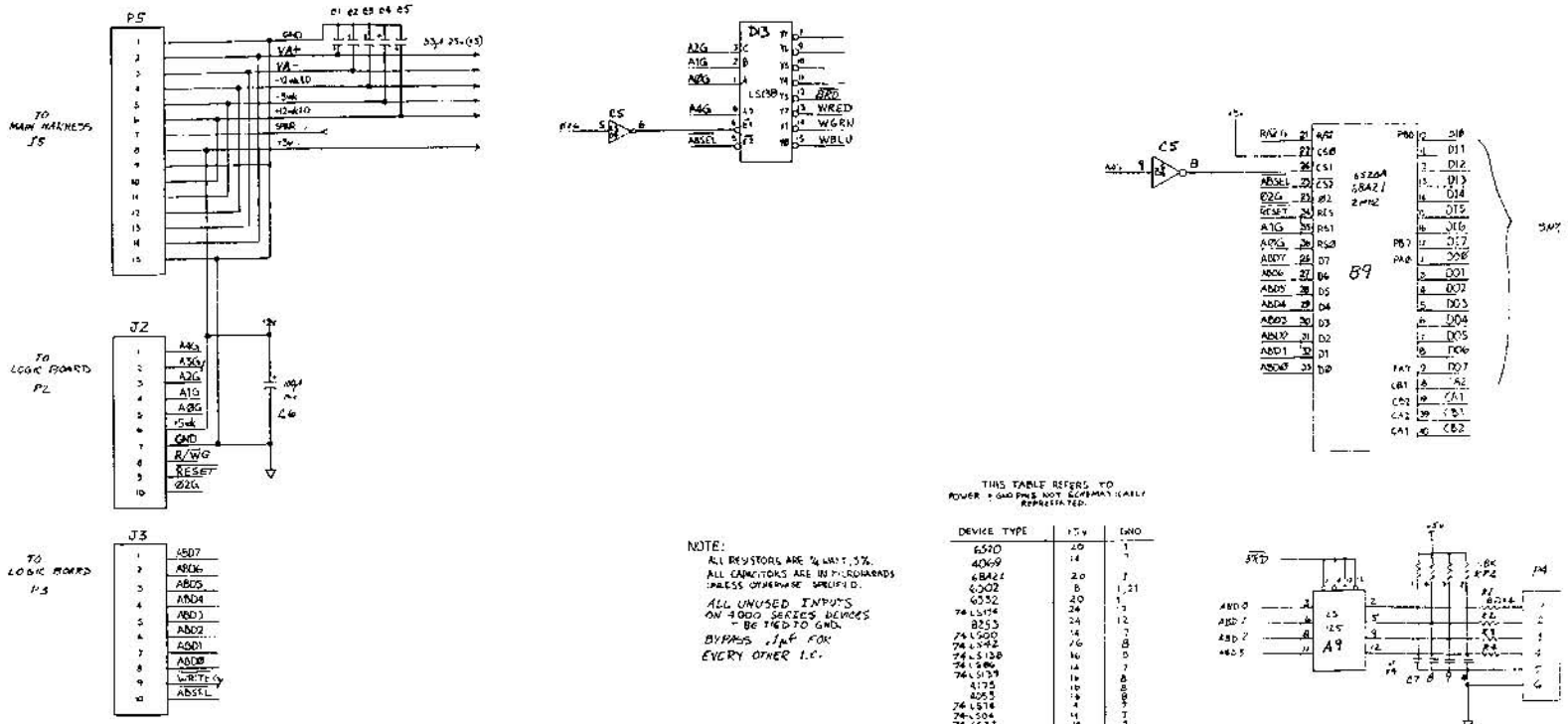

NOTE:
ALL RESISTORS ARE ¼ WATT, 5%.
ALL CAPACITORS ARE IN MICROHARADS UNLESS OTHERWISE SPECIFIED.
ALL UNUSED INPUTS ON 4000 SERIES DEVICES - BE TIED TO GND.
BYPASS .1µF FOR EVERY OTHER I.C.

THIS TABLE REFERS TO POWER + GND PINS NOT SCHEMATICALLY REPRESENTED.

DEVICE TYPE	+5V	GND
6520	20	1
4069	14	7
6BA21	20	1
6502	8	1,21
6532	20	1
74LS154	24	12
8253	24	12
74LS00	14	7
74LS42	16	8
74LS138	16	8
74LS86	14	7
74LS139	16	8
4175	16	8
4053	16	8
74LS14	14	7
74LS04	14	7
74LS32	14	7
74LS367	16	8
4051	16	8
74LS157	16	8
74151	16	8
74148	16	8
74LS174	16	8
74LS125		
4006	14	7
4070	14	7
PHYSICAL MEMORY	24	12

NOTES UNLESS OTHERWISE SPECIFIED

PROPRIETARY	DESIGN DRAWING	DRAWN BY NEAL R. ZOOK	DATE 6-8-81	DESIGNED MARK VON STRIVER	DATE 6-8-81	SCALE				290 JAVA CIR SUNNYVALE CA 94086 408-734-8410	D	TITLE/DESCRIPTION MOUSETRAP AUDIO-COLOR SCHEMATIC DIAGRAM	SHEET 1 OF 5	DRAWING NO. 77-[illegible]
		CHECKED MARK VON STRIVER	DATE 6-8-81	PROJECT ENGINEER [illegible]	DATE 6-16-81	DO NOT SCALE DRAWING								

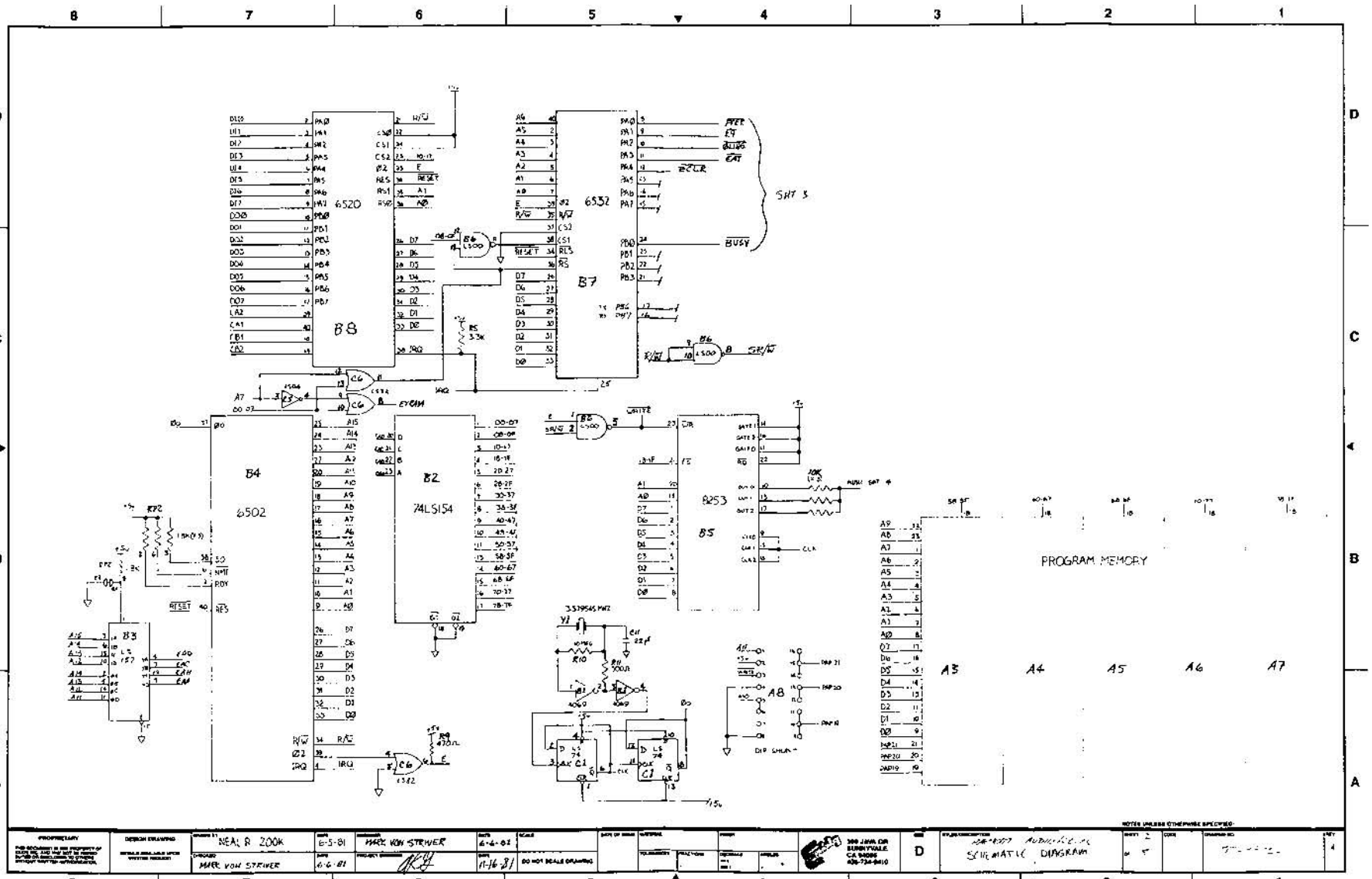

6520
B8
6532
B7
SHT 3
B4
6502
B2
74LS154
8253
B5
PROGRAM MEMORY
A3
A4
A5
A6
A7
B3
A8
DIP SHUNT
NEAL R 200K
6-5-81
MARK VON STRIVER
6-6-81
11-16-81
DO NOT SCALE DRAWING
D
SCHEMATIC DIAGRAM

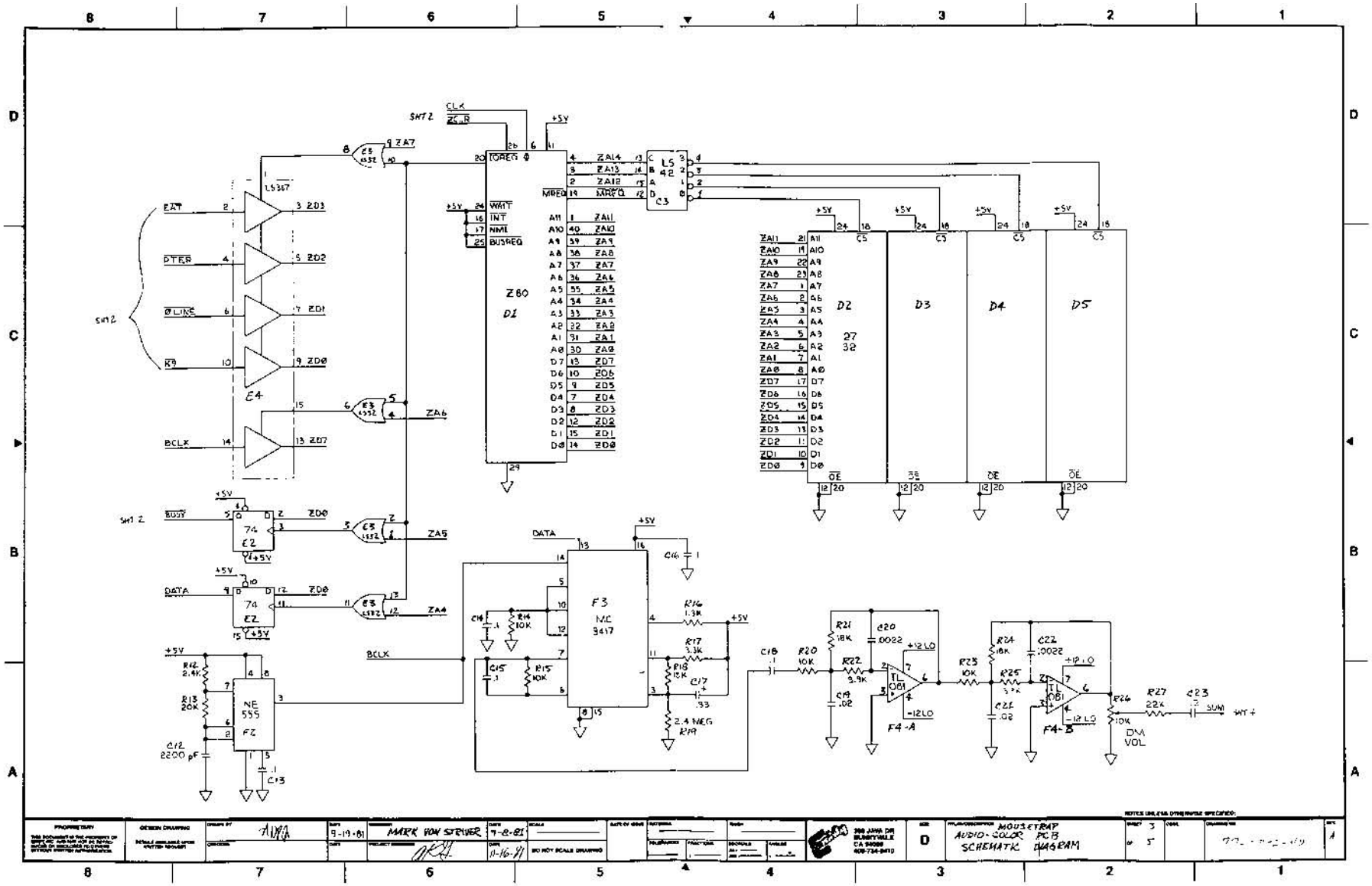

PROPRIETARY	DESIGN DRAWING	DRAWN BY	DATE 9-19-81	MARK VON STRIVER	DATE 9-8-81	SCALE			300 JAVA DR BURRYVILLE CA 94080 408-734-8410	SIZE D	MOUSETRAP AUDIO-COLOR PCB SCHEMATIC DIAGRAM
		CHECKED	DATE	PROJECT MANAGER	DATE 11-16-81	NO NOT SCALE DRAWING					SHEET 3 OF 5

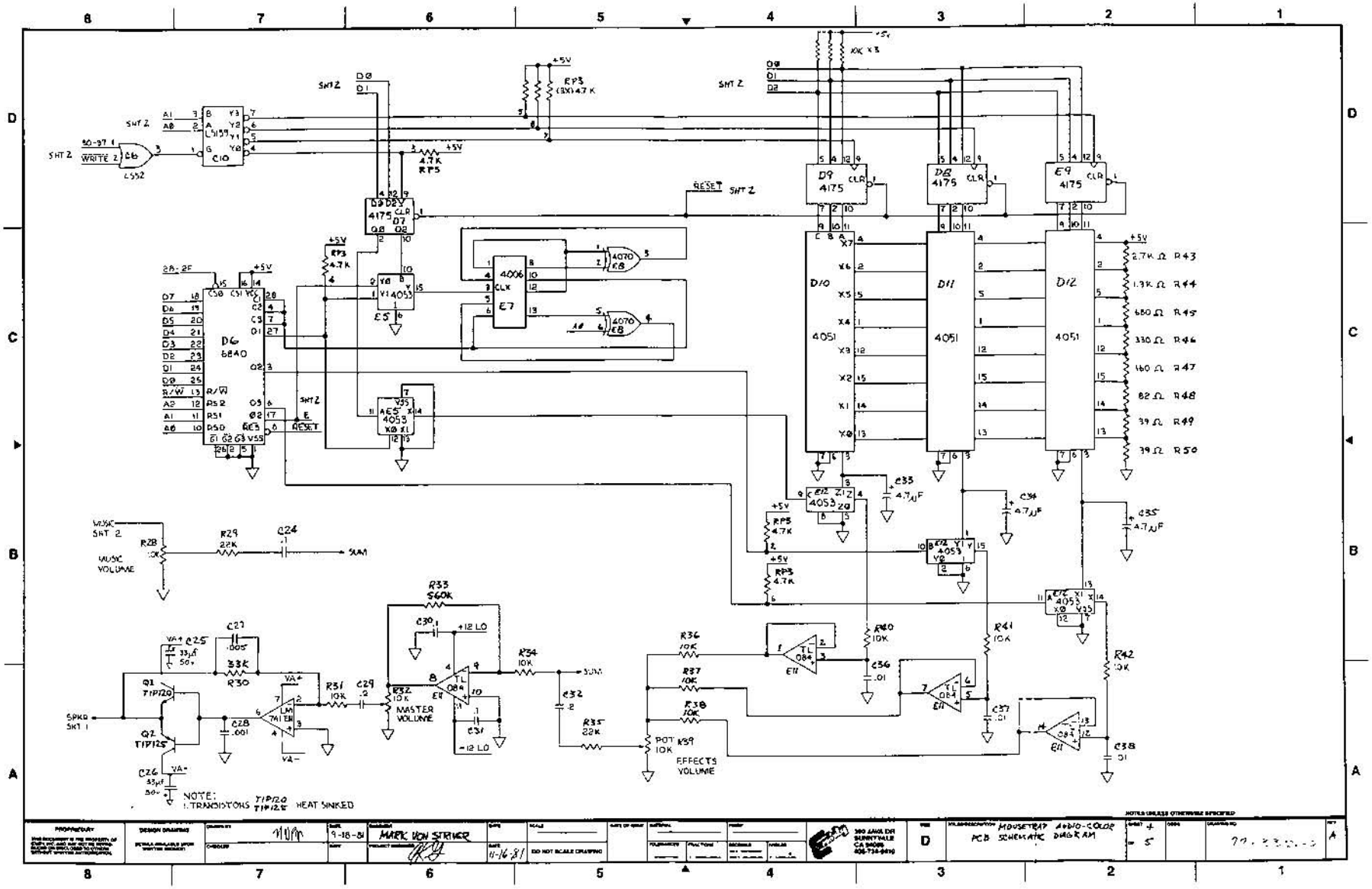
MUSIC VOLUME
MASTER VOLUME
EFFECTS VOLUME
POT K89 10K
NOTE:
1. TRANSISTORS TIP120 TIP125 HEAT SINKED
MARK VON STRINGER
9-18-81
11-16-81
DO NOT SCALE DRAWING
MOUSETRAP AUDIO-COLOR PCB SCHEMATIC DIAGRAM
D
SHT 4 OF 5

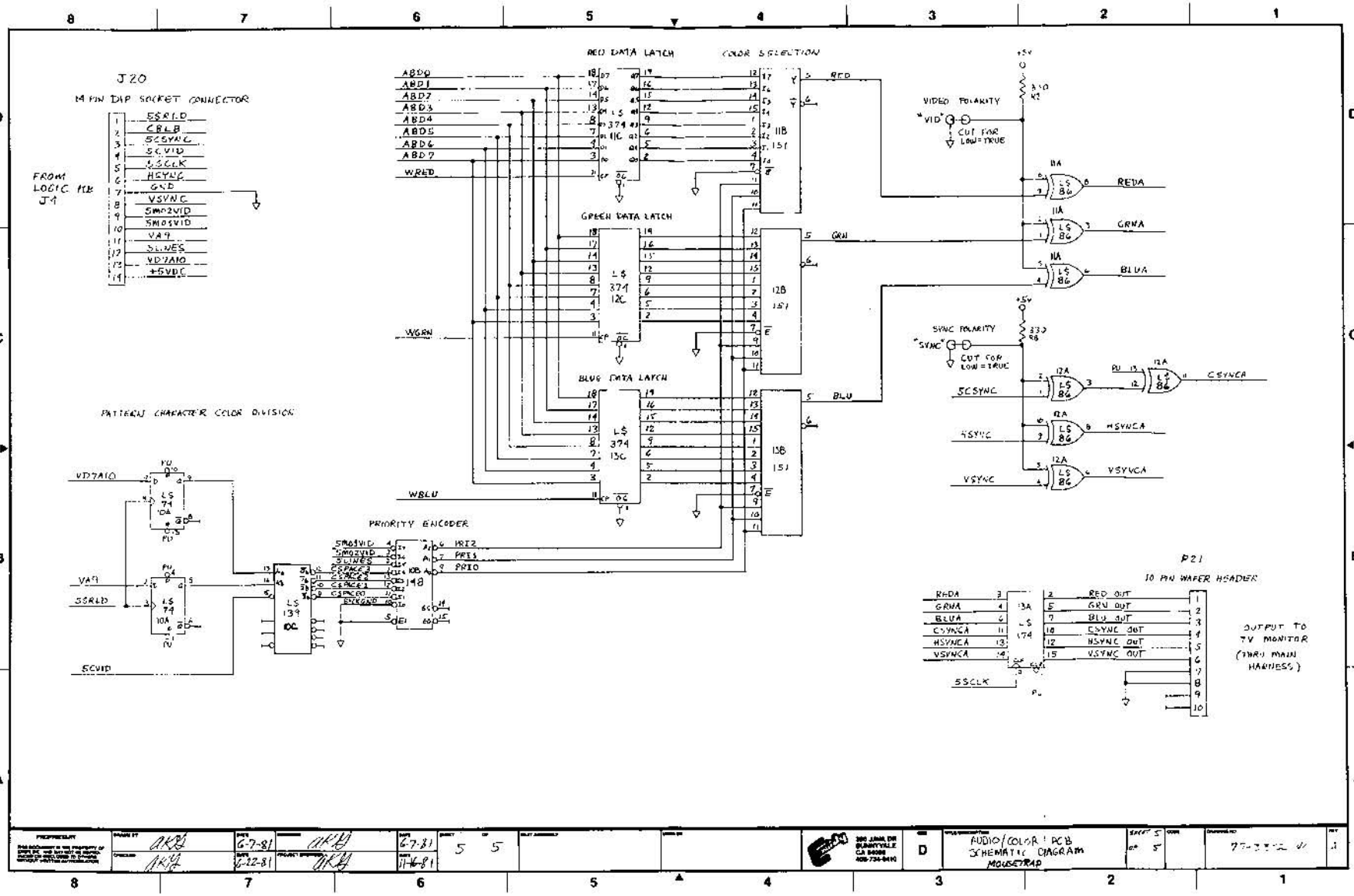
J20
14 PIN DIP SOCKET CONNECTOR
FROM LOGIC PCB J4
SSRLD
CBLB
SCSYNC
SCVID
SSCLK
HSYNC
GND
VSYNC
SMO2VID
SMO3VID
VA9
SLINES
VD7A10
+5VDC
RED DATA LATCH
COLOR SELECTION
GREEN DATA LATCH
BLUE DATA LATCH
ABD0
ABD1
ABD2
ABD3
ABD4
ABD5
ABD6
ABD7
WRED
WGRN
WBLU
RED
GRN
BLU
VIDEO POLARITY
"VID"
CUT FOR LOW=TRUE
SYNC POLARITY
"SYNC"
CUT FOR LOW=TRUE
REDA
GRNA
BLUA
CSYNCA
HSYNCA
VSYNCA
PATTERN CHARACTER COLOR DIVISION
PRIORITY ENCODER
PRI2
PRI1
PRI0
P21
10 PIN WAFER HEADER
RED OUT
GRN OUT
BLU OUT
CSYNC OUT
HSYNC OUT
VSYNC OUT
OUTPUT TO TV MONITOR (THRU MAIN HARNESS)
AUDIO/COLOR PCB SCHEMATIC DIAGRAM
MOUSETRAP
D
6-7-81
6-22-81
11-16-81
5 5

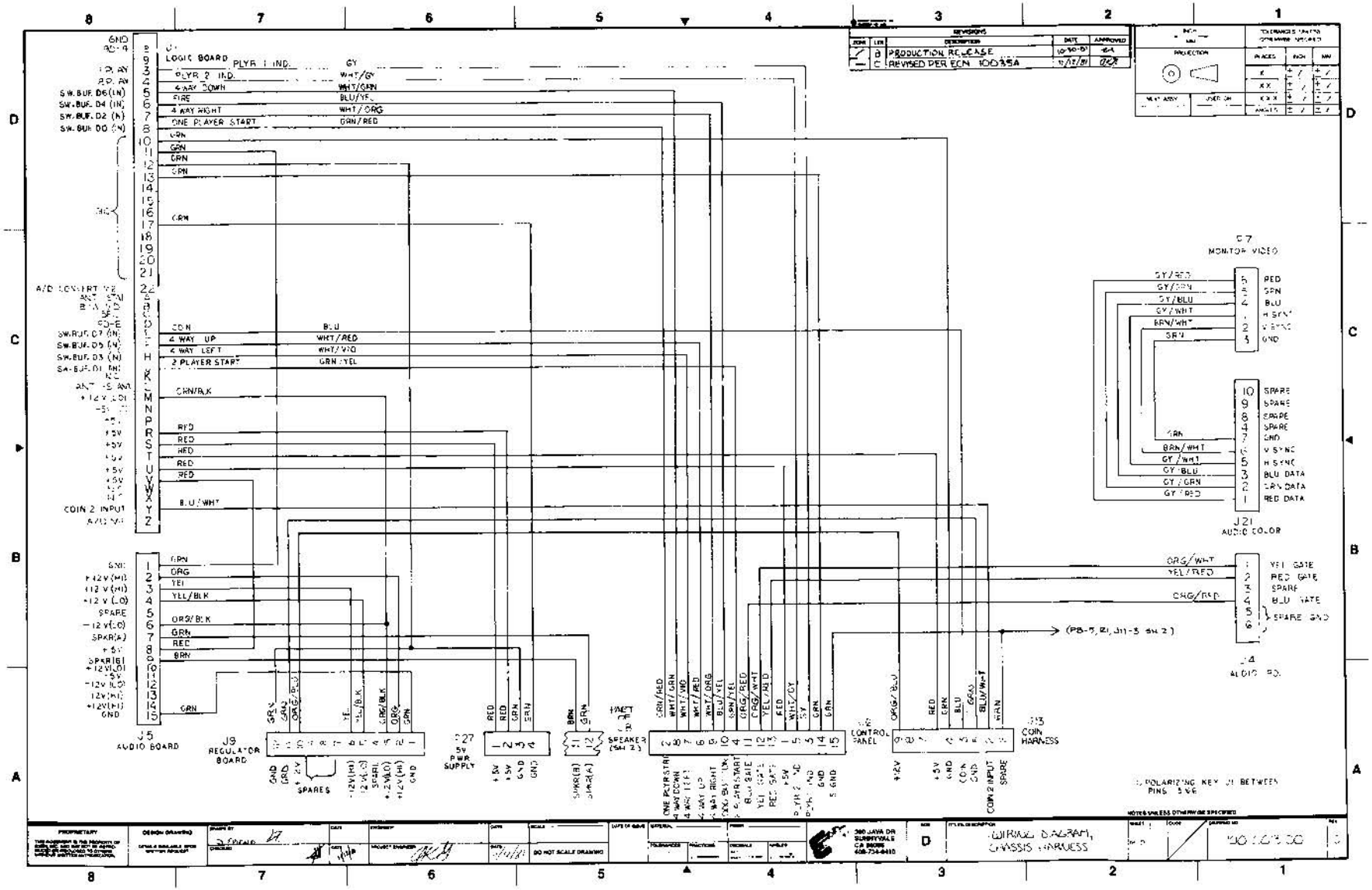

REVISIONS
B PRODUCTION RELEASE
C REVISED PER ECN 10035A
LOGIC BOARD
PLYR 1 IND.
PLYR 2 IND.
4 WAY DOWN
FIRE
4 WAY RIGHT
ONE PLAYER START
4 WAY UP
4 WAY LEFT
2 PLAYER START
COIN 2 INPUT
J5
AUDIO BOARD
J9
REGULATOR BOARD
SPARES
J27
5V PWR SUPPLY
SPEAKER (SH 2)
J2
CONTROL PANEL
J13
COIN HARNESS
J7
MONITOR VIDEO
J21
AUDIO COLOR
J4
AUDIO PD.
(P8-5, R1, J11-3 SH 2)
POLARIZING KEY J1 BETWEEN PINS 5 & 6
NOTES UNLESS OTHERWISE SPECIFIED
PROPRIETARY
DESIGN DRAWING
DO NOT SCALE DRAWING
360 JAVA DR
SUNNYVALE
CA 94086
408-734-6410
D
WIRING DIAGRAM,
CHASSIS HARNESS

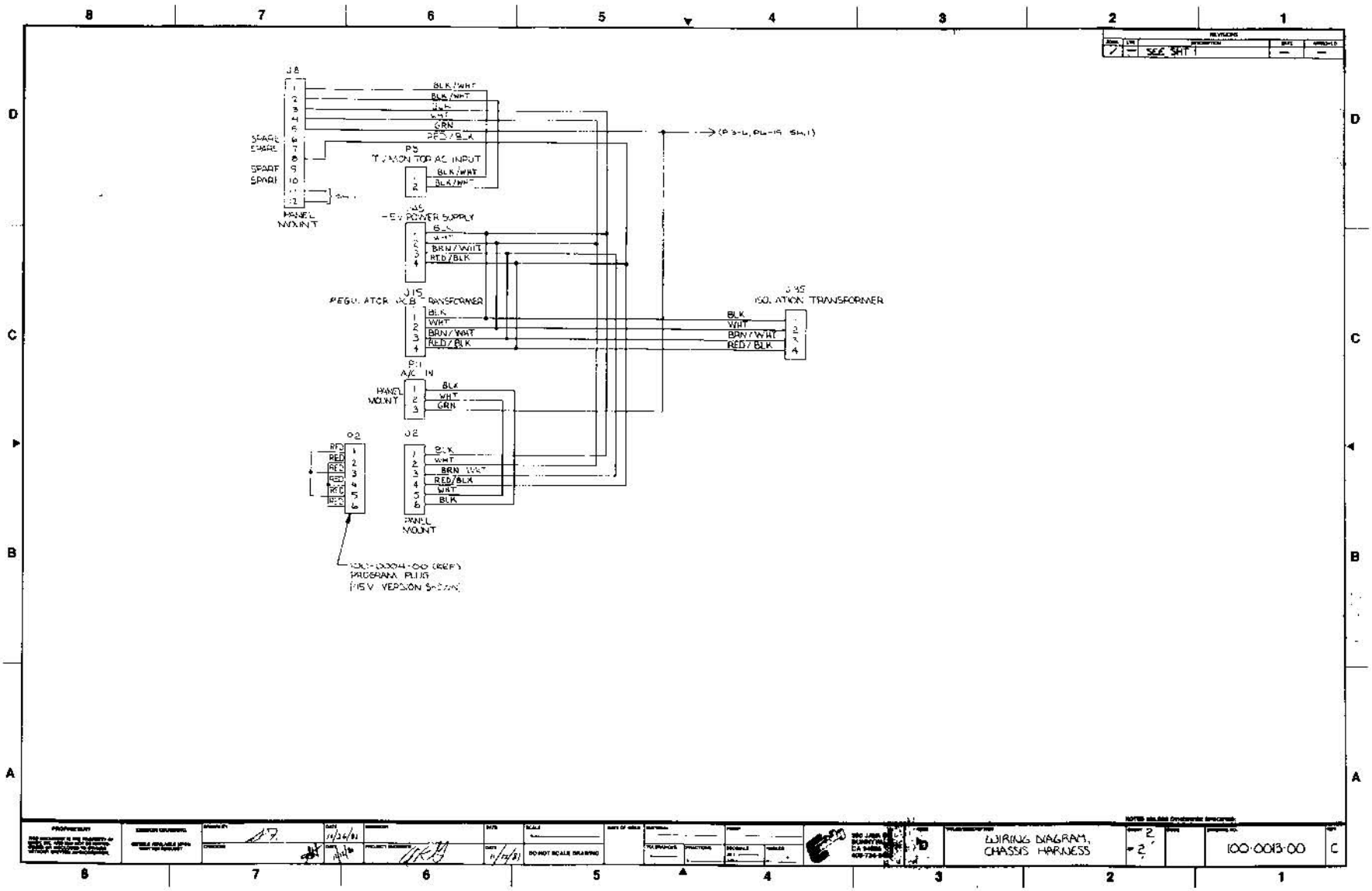

REVISIONS				
ZONE	LTR	DESCRIPTION	DATE	APPROVED
7	—	SEE SHT 1	—	—

| | | | |

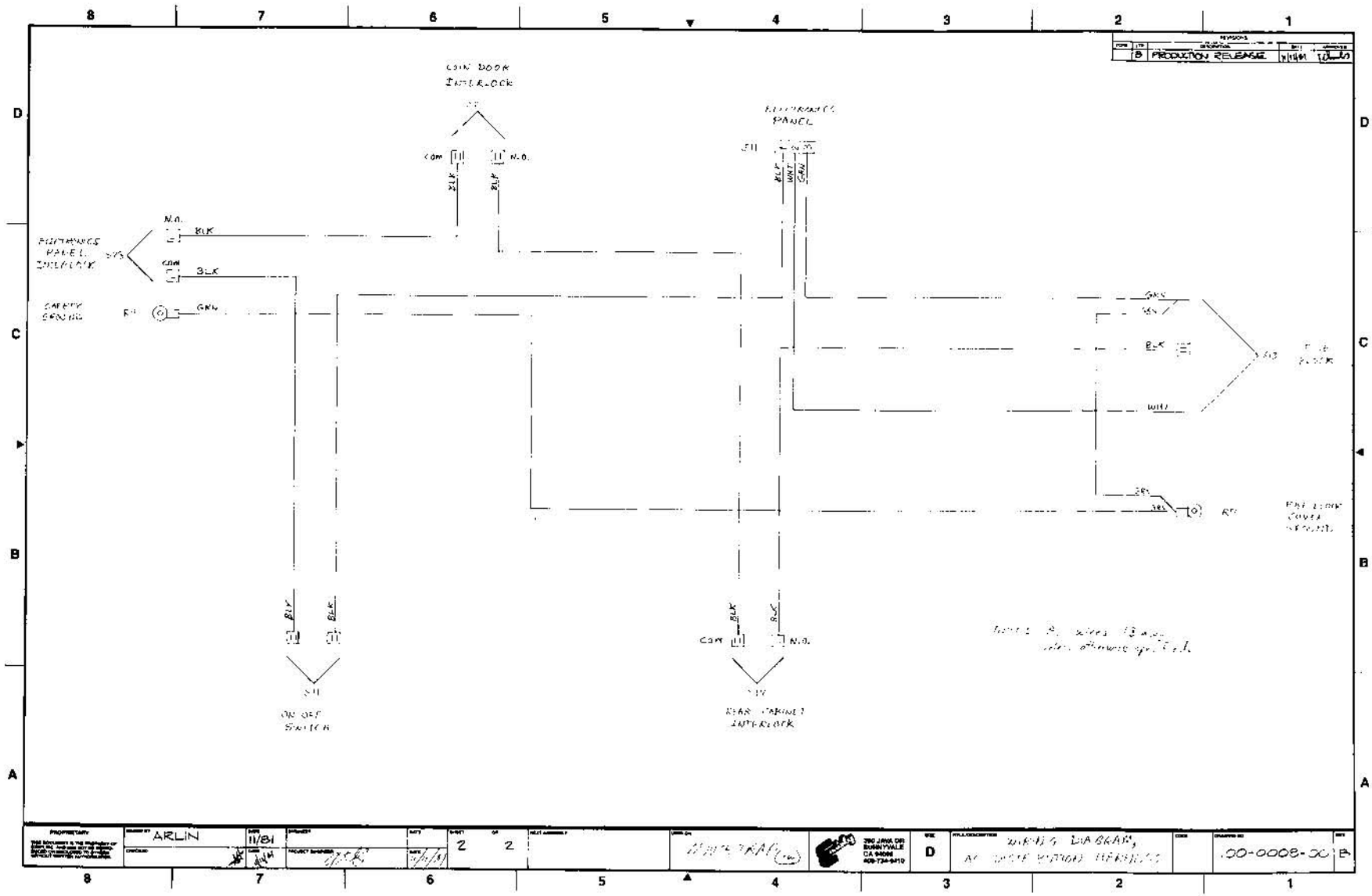

COIN DOOR INTERLOCK
COM
N.O.
BLK
ELECTRONICS PANEL
WHT
GRN
ELECTRONICS PANEL INTERLOCK
SAFETY GROUND
ON OFF SWITCH
REAR CABINET INTERLOCK
PRODUCTION RELEASE
PROPRIETARY
ARLIN
11/81
2
2
D
WIRING DIAGRAM,
.00-0008-00
B

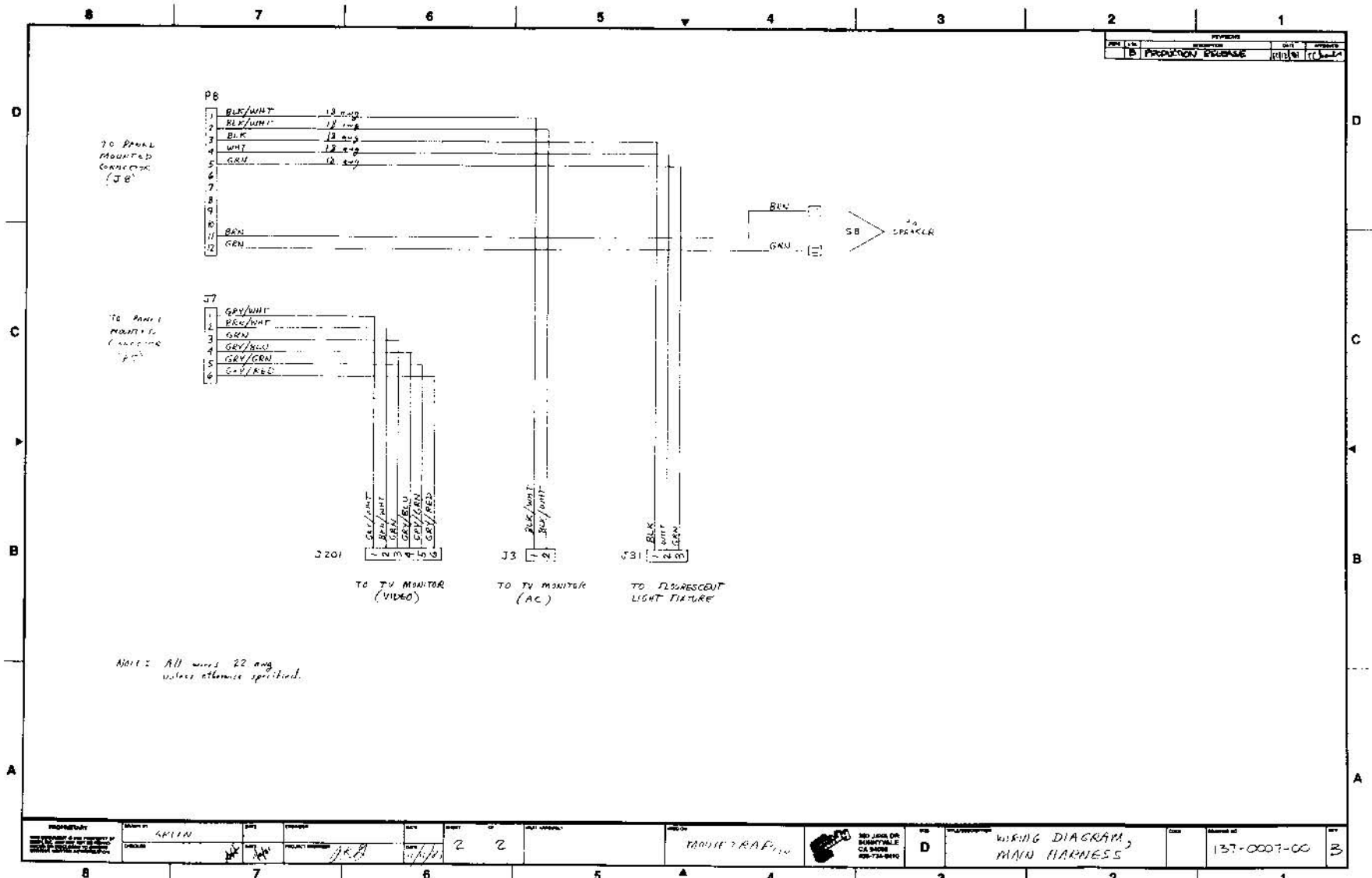

B PRODUCTION RELEASE
P8
BLK/WHT 18 ang
BLK/WHT 18 ang
BLK 18 ang
WHT 18 ang
GRN 18 ang
BRN
GRN
TO PANEL MOUNTED CONNECTOR (J8)
J7
GRY/WHT
BRN/WHT
GRN
GRY/BLU
GRY/GRN
GRY/RED
TO PANEL MOUNTED CONNECTOR (P7)
BRN
GRN
S8
TO SPEAKER
J201
GRY/WHT
BRN/WHT
GRN
GRY/BLU
GRY/GRN
GRY/RED
TO TV MONITOR (VIDEO)
J3
BLK/WHT
BLK/WHT
TO TV MONITOR (AC)
J31
BLK
WHT
GRN
TO FLOORESCENT LIGHT FIXTURE
NOTE: All wires 22 ang unless otherwise specified.
GRIEN
2
2
MONITOR RAP
D
WIRING DIAGRAM, MAIN HARNESS
137-0007-00
B

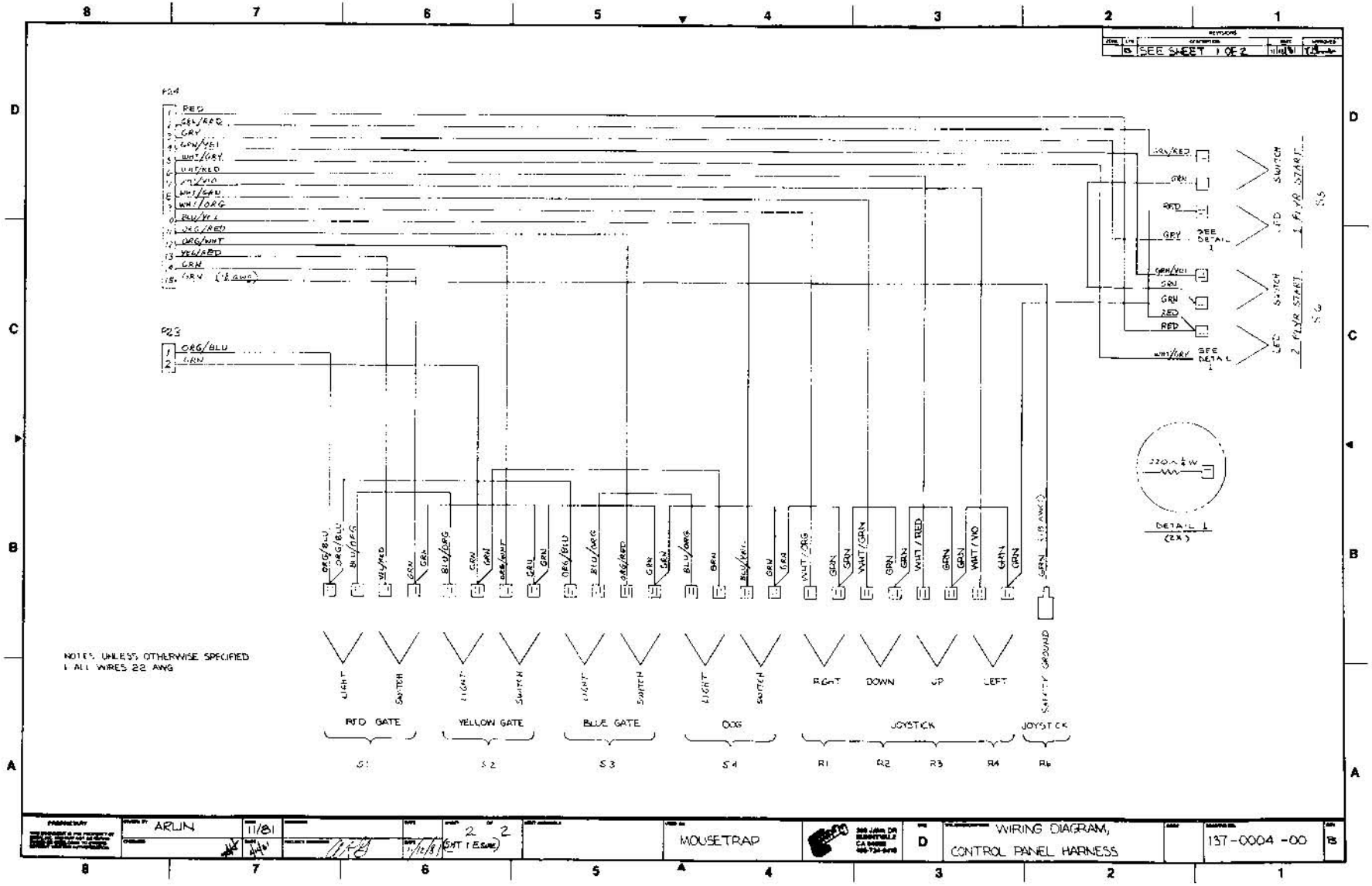
SEE SHEET 1 OF 2
P24
RED
GRN/RED
GRY
GRN/YEL
WHT/GRY
WHT/RED
WHT/VIO
WHT/GRN
WHT/ORG
BLU/YEL
ORG/RED
ORG/WHT
YEL/RED
GRN
GRY (18 AWG)
P23
ORG/BLU
GRN
SEE DETAIL 1
SWITCH
LED
1 FLYR START
2 FLYR START
S5
S6
220Ω ¼W
DETAIL 1
(2X)
LIGHT
SWITCH
RIGHT
DOWN
UP
LEFT
SAFETY GROUND
RED GATE
YELLOW GATE
BLUE GATE
DOG
JOYSTICK
JOYSTICK
S1
S2
S3
S4
R1
R2
R3
R4
R6
NOTES UNLESS OTHERWISE SPECIFIED
1 ALL WIRES 22 AWG
ARLIN
11/81
MOUSETRAP
D
WIRING DIAGRAM,
CONTROL PANEL HARNESS
137-0004-00
B

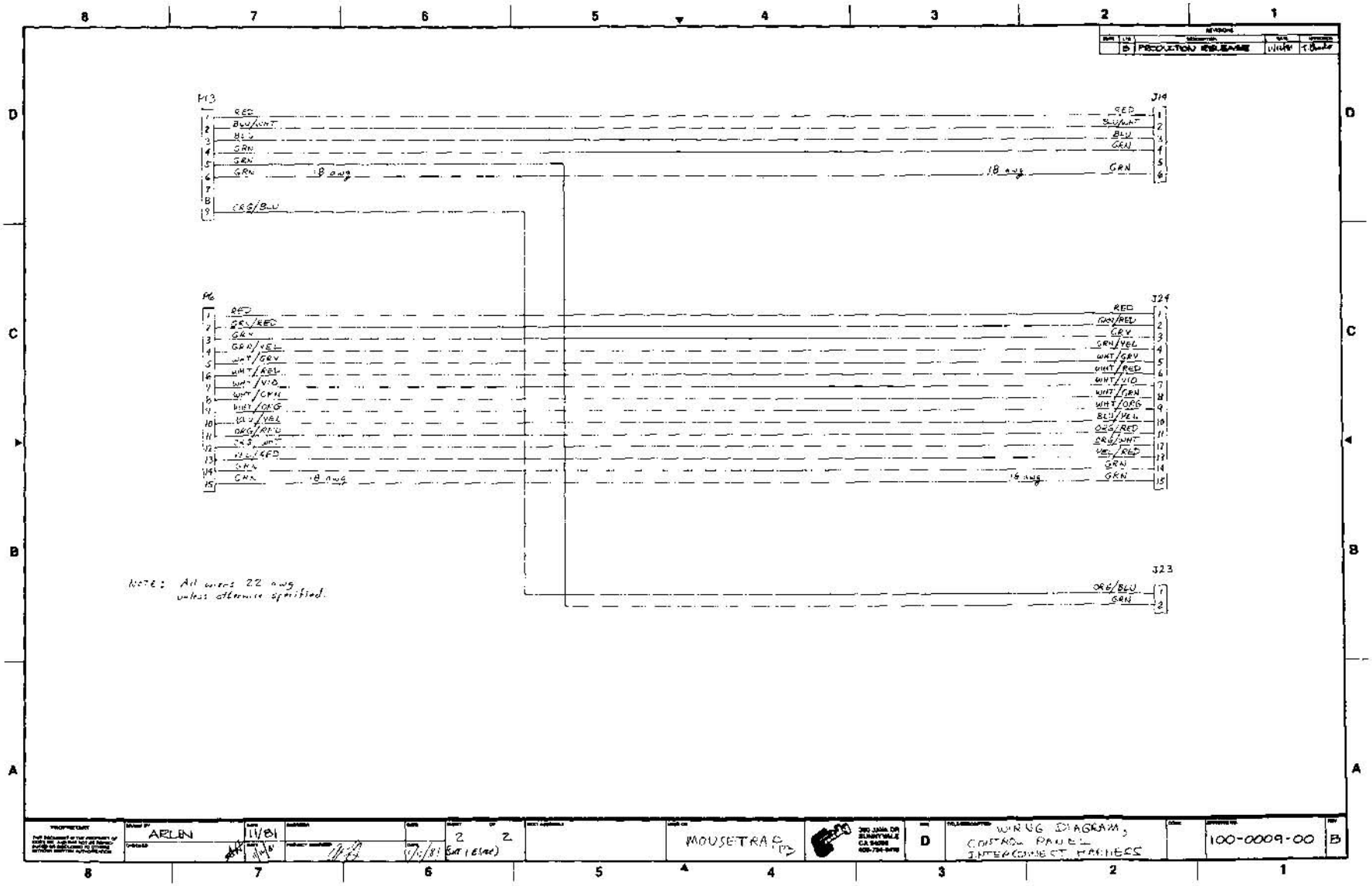

REVISIONS
B PRODUCTION RELEASE
P13
J14
RED
BLU/WHT
BLU
GRN
GRN
GRN
18 awg
ORG/BLU
P6
J24
RED
GRN/RED
GRY
GRN/YEL
WHT/GRY
WHT/RED
WHT/VIO
WHT/GRN
WHT/ORG
BLU/YEL
ORG/RED
ORG/WHT
YEL/RED
GRN
GRN
18 awg
J23
ORG/BLU
GRN
NOTE: All wires 22 awg unless otherwise specified.
PROPRIETARY
ARLEN
11/81
2 2
MOUSETRAP
D
WIRING DIAGRAM, CONTROL PANEL INTERCONNECT HARNESS
100-0009-00
B