SIGNAL	DESCRIPTION
28MHZ	28.63636 MHz(NTSC)/28.37516 MHz(PAL) Master Clock
7MHZ	7 MHz Processor Clock
A[23:1]	Processor Address (68000)
ACK	Data Acknowledge (Parallel)
AS	Address Strobe (68000)
AUDIN	Audio Input (RS232 jack)
AUDOUT	Audio Output (RS232 jack)
BEER	Bus Error (68000)
BG	Bus Grant (68000)
BGACK	Bus Grant Acknowledge (68000)
BLISS	Blitter Slowdown (chips)
BLIT	Chip Memory Access (chips)
BR	Bus Request (68000)
BUSY	Device Busy (parallel)
CASL/CASU	CAS lower/upper byte (DRAM)
CCK	Color Clock aka C1 (chips)
CCKQ	Color Clock Quadrature aka C3 (chips)
CDAC	7 MHz Quatrature Clock
CHNG	Media Change (floppy)
CLKRD/CLKWR	Real-time Clock Read/Write
CSYNC	Composite Sync (video)
CTS	Clear to Send (rs232)
D[15:0]	Processor Data (68000)
DIR	Direction (floppy)
DKRD	Diskette Read Data (floppy)
DKWDB	Diskette Write Data (floppy)
DKWEB	Diskette Write Enable (floppy)
DMAL	Chip DMA Request (chips)
DRA[8:0]	DRAM Address (DRAM, chips)
DRD[15:0]	DRAM Data (DRAM, chips)
DSR	Data Set Ready (rs232)
DTACK	Data Transfer Acknowledge (68000)
DTR	Data Terminal Ready (rs232)
E	Peripheral E Clock (68000)
EXRAM	Expansion Memory Present
FC[0:0]	Function Control (68000)
FIRE0/FIRE1	Fire Button (joysticks)
HLT	Processor Halt (68000)
HSYNC	Horizontal Sync (video)
INDEX	Diskette Index Hole (floppy)
INT[2,3,6]	Interrput Requests (chips)
IORESET	I/O Reset
IPL[2:0]	Processor Interrupt Requests (68000)
KBCLOCK	Keyboard Clock (keyboard)
KBDATA	Keyboard Data (keyboard)
KBRESET	Keyboard Reset (keyboard)
LDS/UDS	Upper/Lower Data Strobe (68000)
LED	Power On LED

SIGNAL	DESCRIPTION
LEFT/RIGHT	Audio Channels
MTR	Motor On (floppy)
MTR0	Motor On Drive (floppy)
M0V/M0H	Mouse Quadrature Signals (joysticks)
M1V/M1H	Mouse Quadrature Signals (joysticks)
OVL	Overlay ROM over RAM
OVR	Override System Decodeing
PIXELSW	Pixel Switch (video)
POT0X/POT0Y	Pot Lines (joysticks)
POT1X/POT1Y	Pot Lines (joysticks)
POUT	Paper Out (parallel)
PPD[7:0]	Parallel Port Data (parallel)
RAMEN	RAM Enable (chips)
REGEN	Chip Register Enable (chips)
RAS0/RAS1	RAS Internal/Expansion Lines (DRAM)
RDY	Drive Ready (floppy)
RESET	General Reset
RGA[8:1]	Register Address Bus (chips)
RI	Ring Indicate (rs232)
ROMEN	ROM Enable
RTS	Request to Send (rs232)
RST	Processor Reset (68000)
RXD	Receive Data (RS232)
RW	Processor Read/Write (68000)
SEL	Select (parallel)
SEL[3:0]	Drive Select (floppy)
SIDE	Side Select (floppy)
STEP	Head Step Command (floppy)
TRK0	Track 0 Sense (floppy)
TXD	Transmit Data (RS232)
VMA	Valid Memory Address (68000)
VPA	Valid Peripheral Address (68000)
VSYNC	Vertical Sync (video)
WE	Write Enable (DRAM)
WPROT	Write Protect Sense (floppy)
XCLK	External 28 MHz Clock (genlock)
XCLKEN	External Clock Enable (genlock)
XRDY	External Data Ready
AUDL/AUDR	Amiga Audio Left/Right
AEMP	Audio Deemphasis
AUPLY	CD Audio Play
BAS	Buffered Address Strobe
BCLK	CD Audio Clock
BCSMCEN/BCSMCOD	Buffered Chip Select Memory Card Even/Odd
BRW	Buffered Processor Read/Write
BSEN	Logic Voltage Sense
BTXD	Buffer Transmit Data (Midi)
BLDS/BUDS	Buffered Upper/Lower Data Strobe

SIGNAL	DESCRIPTION
C16M	16MHz Dac Clock
CDAL/CDAR	CD Audio Left/Right
CD/TV	Select CD/TV (see INCD)
CONFIGIN	Config In
CONFIGOUT	Config Out
CSCD	Chip Select CDROM Driver
CSEN/CSOD	Chip Select CDROM Driver Even/Odd
CSMC	Chip Select Memory Card
CSMCEN/CSMCOD	Chip Select Memory Card Even/Odd
CSNV	Non-Volatile Memory Select
CSRC	Real Time Chip Select
CSX0	XT Device Chip Select No.0
DACATT	Attinator Data (Dac)
DACLCH	Attinator Latch (Dac)
DACST	Attinator Strobe (Dac)
DATA	CD Audio Data
DMCD	Dmac Dma Data
EOP,CSX1	End of Process/XT Device Chip Select No.1
GMS[1:0]	Genlock Mode Select (Remote Control)
IFRST	Interface Reset
INAC	Indicator Power/Status
INCD	Indicator CD/TV Mode
INTD	CD Drive Reset
INTS	SCSI Interrupt
IOR/IOW	Dmac Read/Write
KBSE	Keyboard Sense
LMUTE	Line Mute
LRCLK	Audio Left/Right Clock
MPS	Power Sense (Logic)
MS[1:0]	Genlock Mode Select (Amiga)
MUTE	CD Mute
POWER	Main Logic Power On/Off
SD[7:0]	Dmac XT/SCSI Data
VCK	Attinator Data Clock (Head Phone)
VDATA	Attinator Data Clock (Head Phone)
VF[2:1]	Filament Voltage
VST	Attinator Data Clock (Head Phone)
VPP	-30V Voltage
XA,YA,XB,YB[2:1]	Mouse Input Signal
XDACK	XT Device Data Acknowledge
XDREQ	XT Device Data Requirement
EMC	*ENABLE MEMORY CARD*
ECD	*ENABLE CDROM DRIVER (ROM)*
WEPROM	*WRITE ENABLE E²PROM*

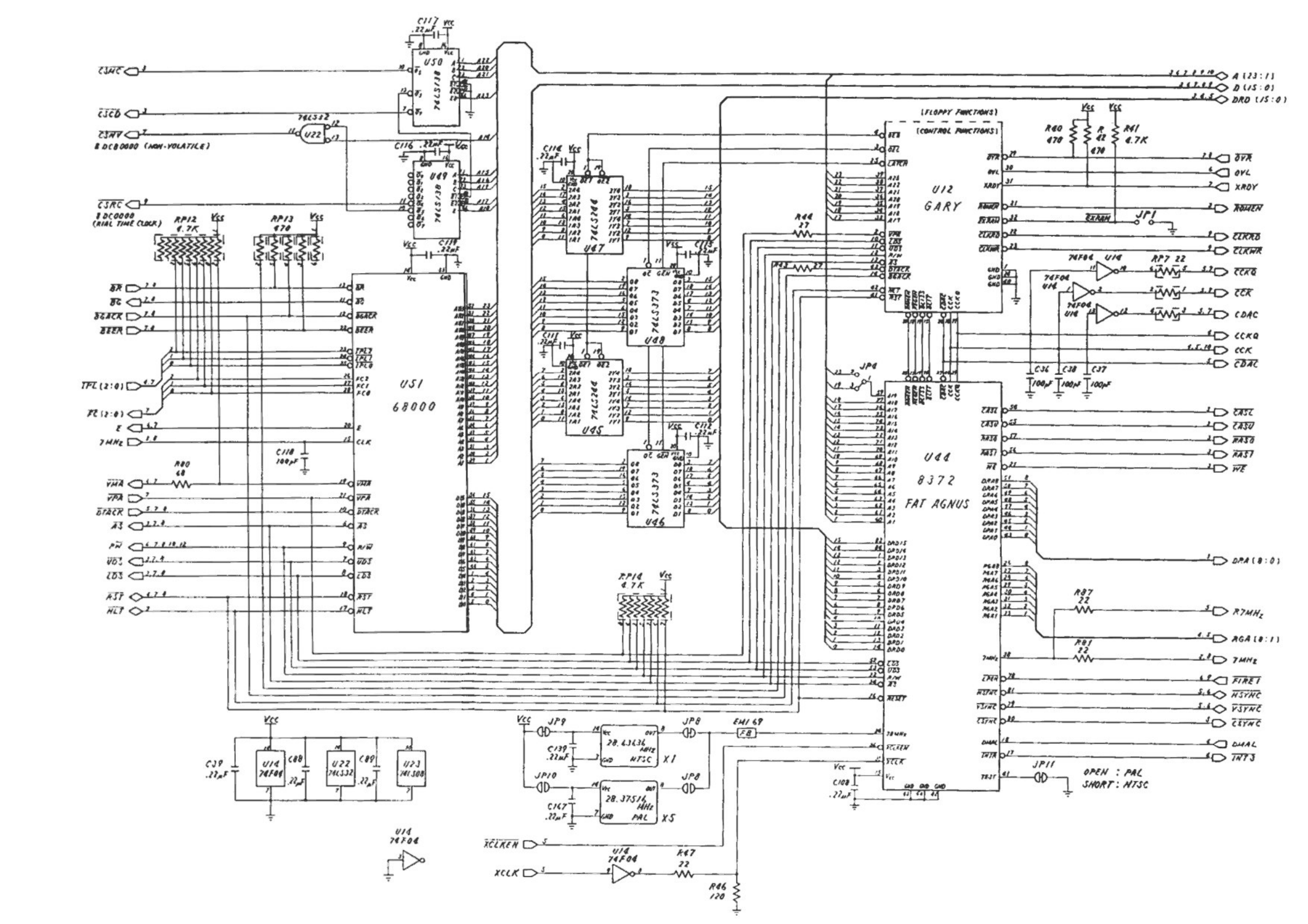

U50
74LS138
U49
74LS138
U22
74LS32
U51
68000
U47
74LS244
U45
74LS244
U48
74LS373
U46
74LS373
U12
GARY
U44
8372
FAT AGNUS
(FLOPPY FUNCTIONS)
(CONTROL FUNCTIONS)
U14
74F04
U23
74LS08
28.63636 MHz
NTSC
X1
28.37516 MHz
PAL
X5
EMI 69
FB
JP1
JP4
JP8
JP9
JP10
JP11
OPEN : PAL
SHORT : NTSC
A (23:1)
D (15:0)
DRD (15:0)
DRA (8:0)
RGA (8:1)
R7MHz
7MHz
FIRE1
HSYNC
VSYNC
CSYNC
DMAL
INT3
XCLKEN
XCLK
CSMC
CSCD
CSNV
8 DC8000 (NON-VOLATILE)
CSRC
8 DC0000 (RIAL TIME CLOCK)
RP12 4.7K
RP13 470
RP14 4.7K
R40 470
R41 4.7K
R44 27
R47 22
R46 120
R80 68
R87 22
R81 22
C36 100pF
C37 100pF
C38 100pF
C118 100pF
C39 .22µF
C88 .22µF
C89 .22µF
C108 .22µF
C139 .22µF
C147 .22µF

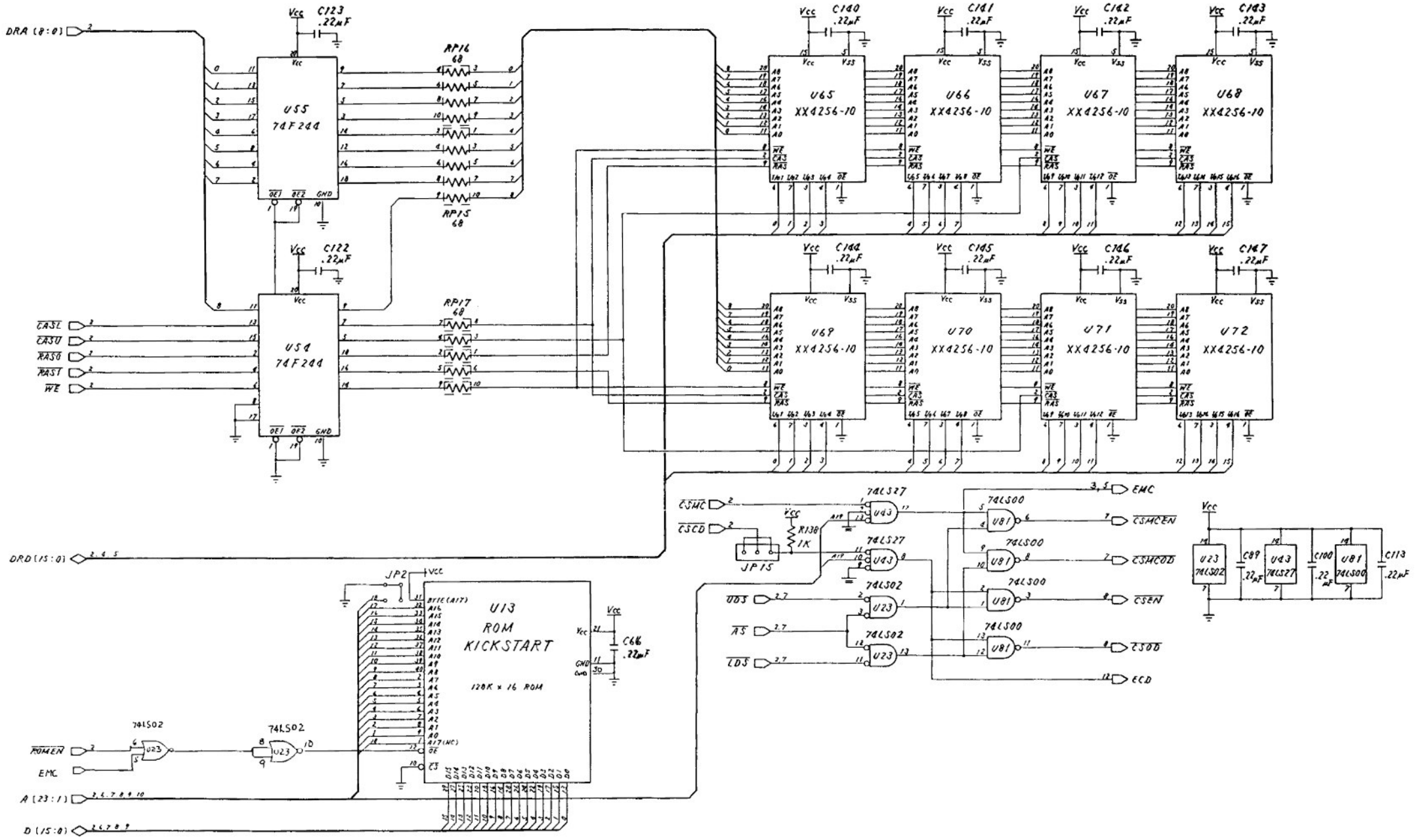
DRA (8:0)
U55
74F244
U54
74F244
RP16
68
RP15
68
RP17
68
C123
.22µF
C122
.22µF
CASL
CASU
RASO
RAST
WE
U65
XX4256-10
U66
XX4256-10
U67
XX4256-10
U68
XX4256-10
U69
XX4256-10
U70
XX4256-10
U71
XX4256-10
U72
XX4256-10
C140
C141
C142
C143
C144
C145
C146
C147
DRD (15:0)
JP2
U13
ROM
KICKSTART
128K x 16 ROM
C66
.22µF
ROMEN
EMC
A (23:1)
D (15:0)
74LS02
74LS27
74LS00
CSMC
CSCD
JP15
R138
1K
UDS
AS
LDS
CSMCEN
CSMCOD
CSEN
CSOD
ECD
C89
C100
C113

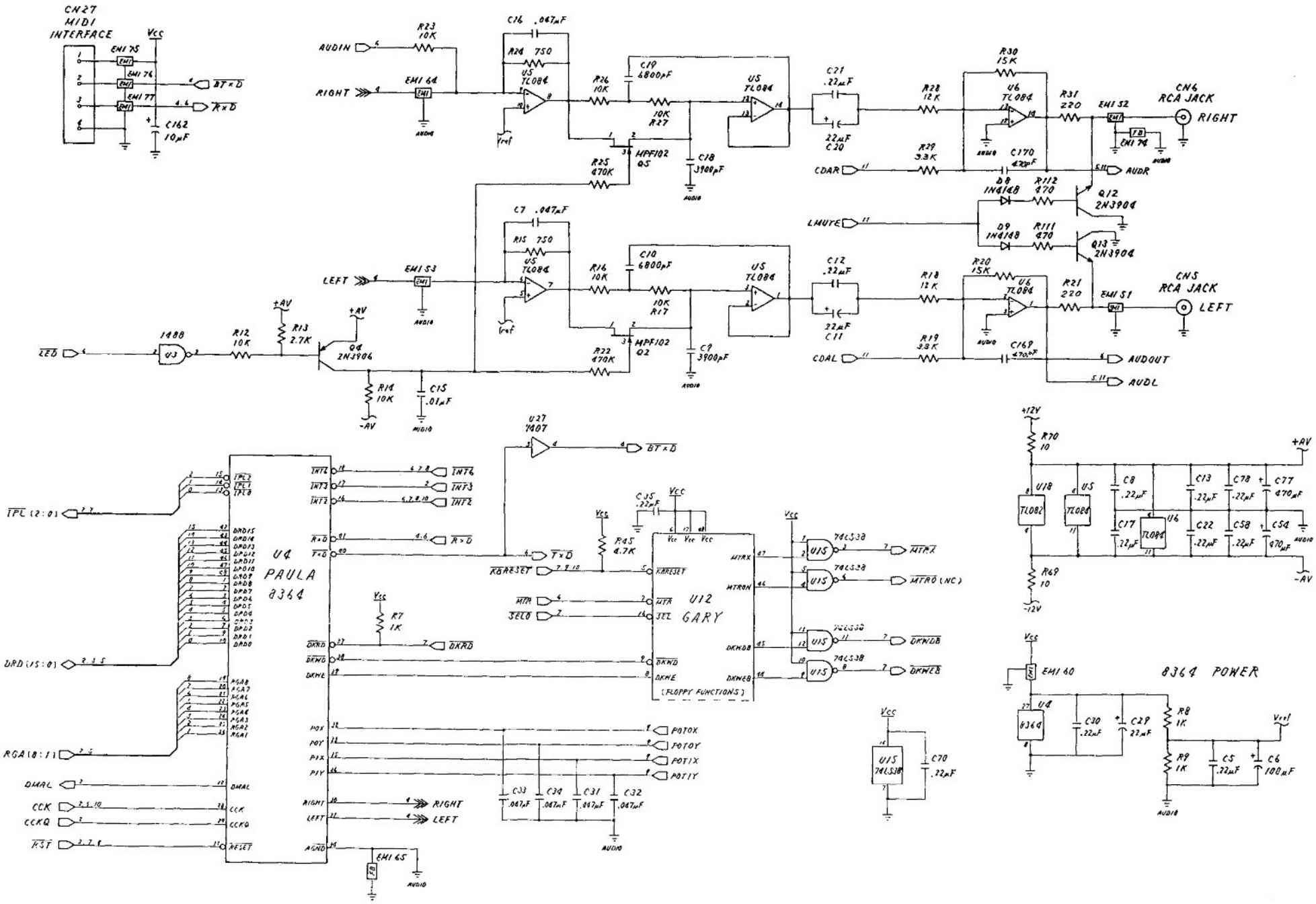
CN27
MIDI
INTERFACE
AUDIN
RIGHT
LEFT
CN6
RCA JACK
RIGHT
CN5
RCA JACK
LEFT
CDAR
CDAL
LMUTE
AUDR
AUDOUT
AUDL
U4
PAULA
8364
U12
GARY
(FLOPPY FUNCTIONS)
8364 POWER
POTOX
POTOY
POTIX
POTIY
RIGHT
LEFT

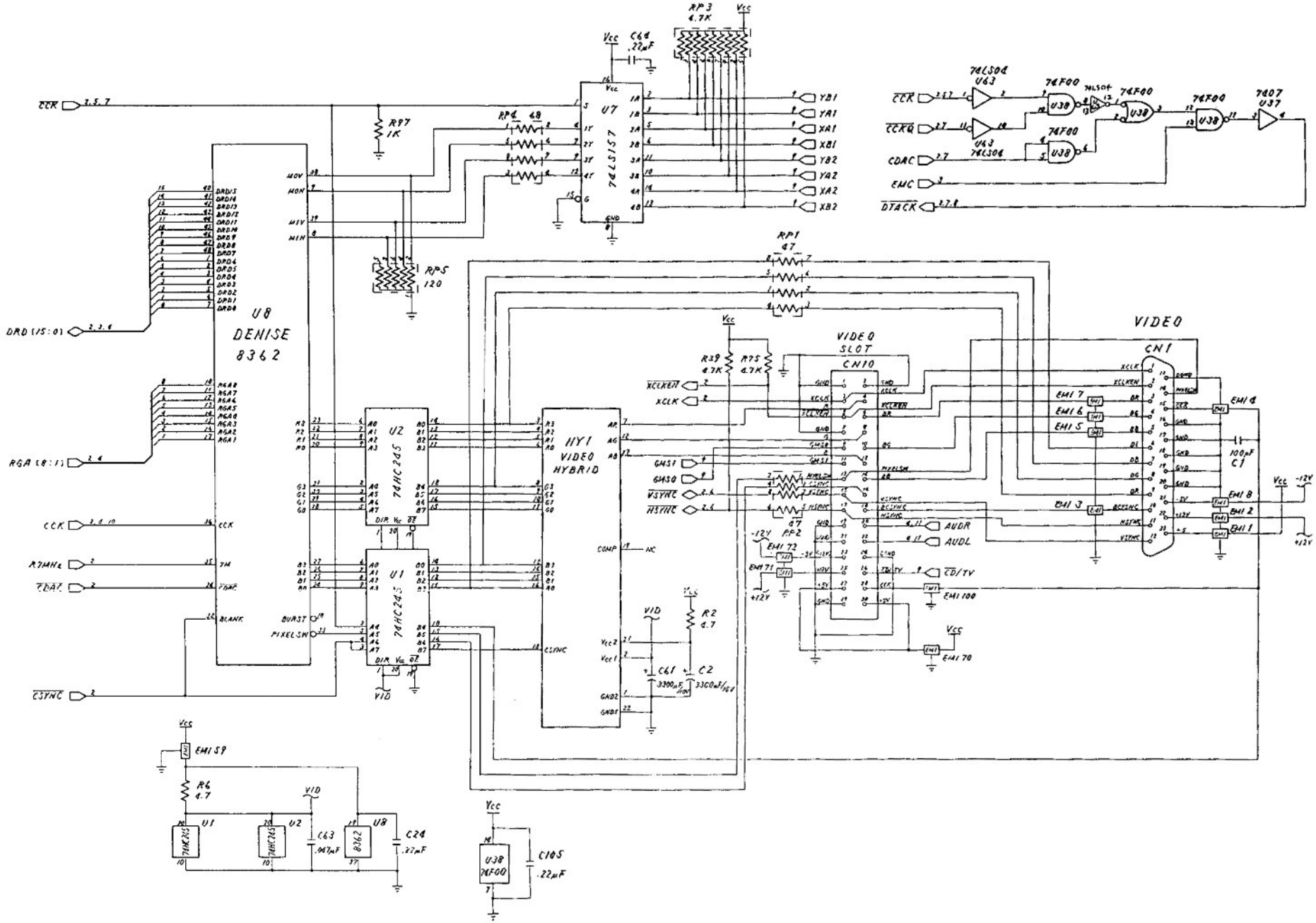

U8
DENISE
8362
U7
74LS157
U2
74HC245
U1
74HC245
HY1
VIDEO
HYBRID
VIDEO
SLOT
CN10
VIDEO
CN1
74LS04
U63
74F00
U38
7407
U37
RP1
47
RP3
4.7K
RP4
68
RP5
120
R97
1K
R39
4.7K
R75
4.7K
R2
4.7
R6
4.7
C64
.22µF
C61
3300µF/10V
C2
3300µF/10V
C63
.047µF
C24
.22µF
C105
.22µF
C1
100pF
DRD (15:0)
RGA (8:1)
CCK
R7MHz
CDAC
CSYNC
CCKQ
EMC
DTACK
XCLKEN
XCLK
GMS1
GMS0
VSYNC
HSYNC
AUDR
AUDL
CD/TV
EMI 100
EMI 70
EMI 72
EMI 71
EMI 59
EMI 7
EMI 6
EMI 5
EMI 4
EMI 3
EMI 8
EMI 2
EMI 1
Vcc
VID
-12V
+12V

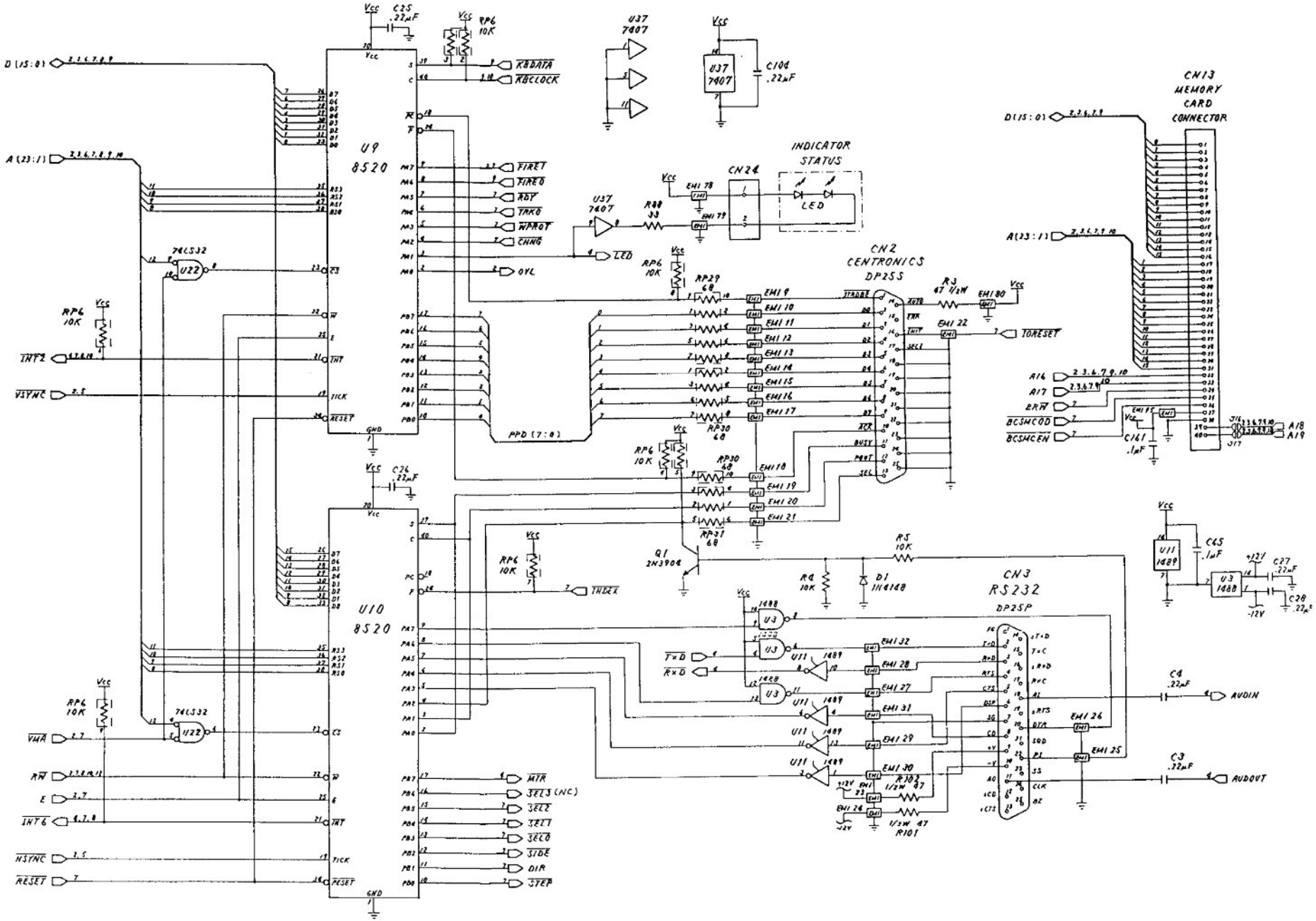

U9
8520
U10
8520
CN2
CENTRONICS
DP25S
CN3
RS232
DP25P
CN13
MEMORY
CARD
CONNECTOR
INDICATOR
STATUS
LED
CN24
PPD (7:0)
74LS32
U37
7407
U11
1489
U3
1488
Q1
2N3904
D1
1N4148
D (15:0)
A (23:1)
KBDATA
KBCLOCK
FIRET
FIREO
RDY
TRKO
WPROT
CHNG
OVL
INT2
VSYNC
VMA
RW
E
INT6
HSYNC
RESET
MTR
SEL3 (NC)
SEL2
SEL1
SEL0
SIDE
DIR
STEP
INDEX
TORESET
AUDIN
AUDOUT
BCSMCOD
BCSMCEN

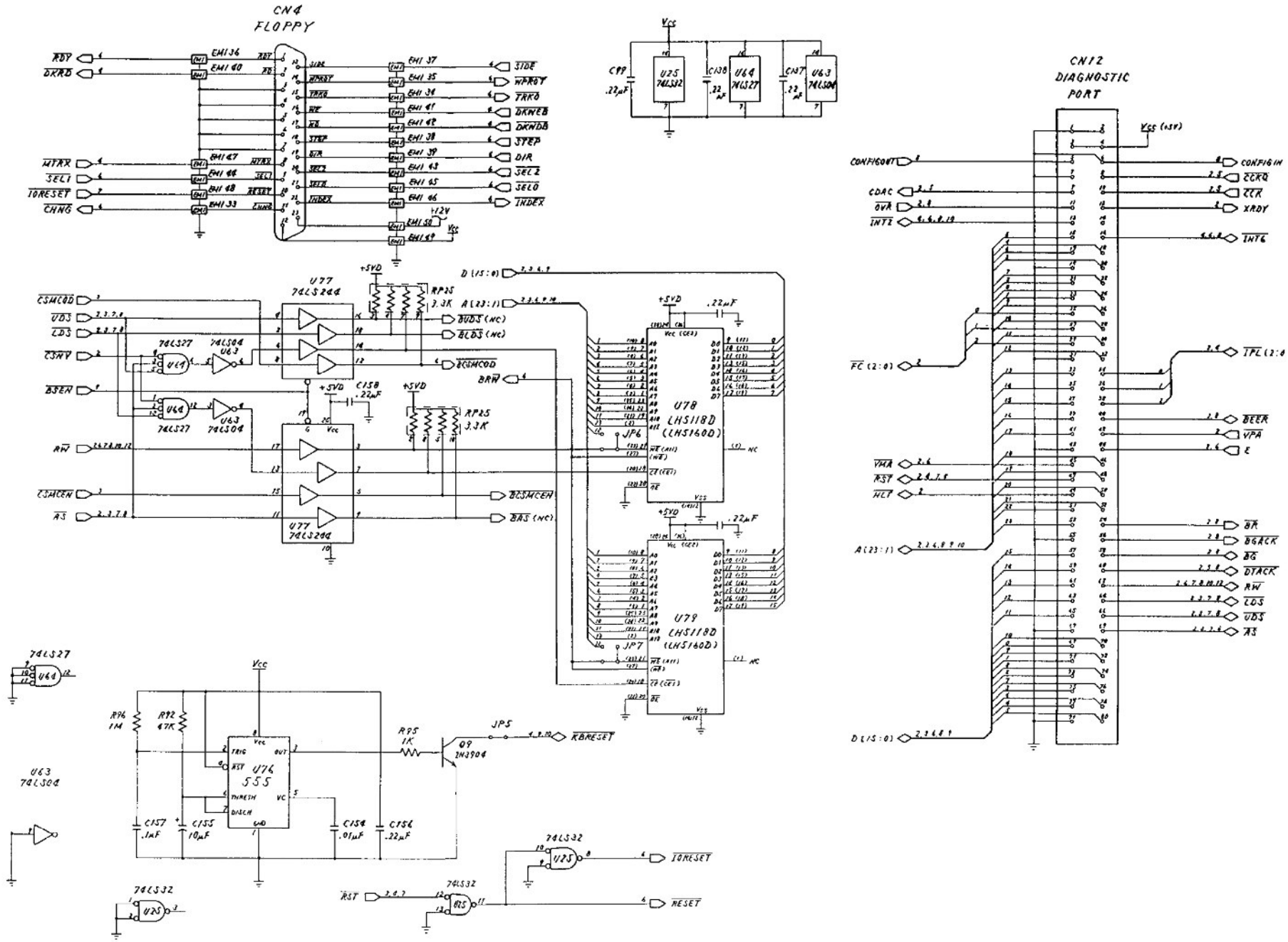
CN4
FLOPPY
CN12
DIAGNOSTIC
PORT
U77
74LS244
U78
LH5118D
(LH5160D)
U79
LH5118D
(LH5160D)
U76
555
U25
74LS32
U64
74LS27
U63
74LS04
Q9
2N3904
JP5
JP6
JP7
RP25
3.3K
RP25
3.3K
R96
1M
R92
47K
R95
1K
C157
.1µF
C155
10µF
C154
.01µF
C156
.22µF
C158
.22µF
C99
.22µF
C138
.22µF
C137
.22µF
+5VD
+12V
Vcc
RDY
DKRD
MTRX
SEL1
IORESET
CHNG
SIDE
WPROT
TRK0
DKWEB
DKWDB
STEP
DIR
SEL2
SEL0
INDEX
CSMCOD
UDS
LDS
CSNV
BSEN
RW
CSMCEN
AS
BUDS (NC)
BLDS (NC)
BCSMCOD
BRW
BCSMCEN
BAS (NC)
D (15:0)
A (23:1)
CONFIGOUT
CDAC
OVR
INT2
FC (2:0)
VMA
RST
HLT
CONFIGIN
CCKQ
CCK
XRDY
INT6
IPL (2:0
BEER
VPA
E
BR
BGACK
BG
DTACK
RW
LDS
UDS
AS
RBRESET
IORESET
RESET
RST

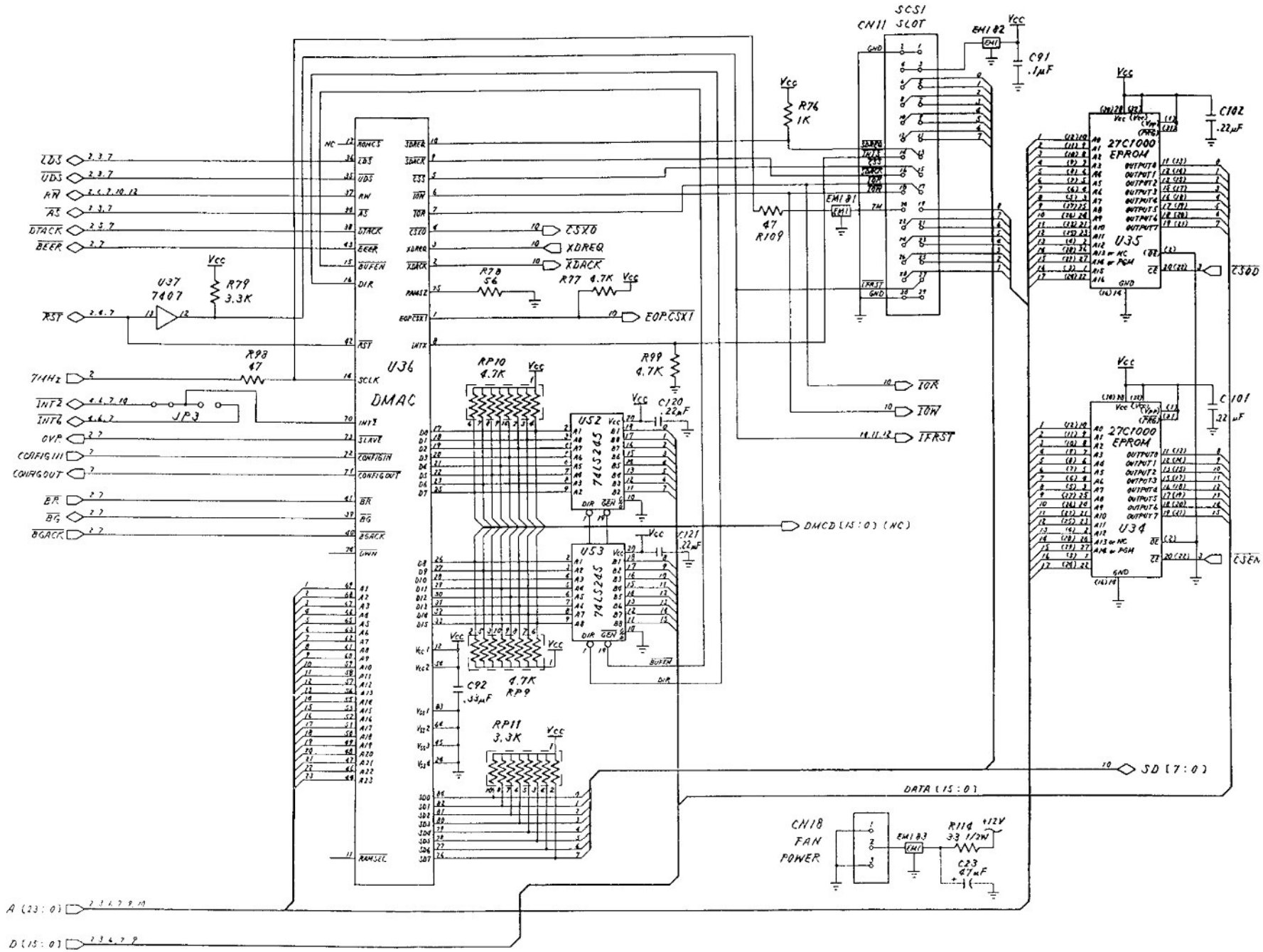

SCS1
CN11 SLOT
EMI 82
C91 .1μF
R76 1K
EMI 81
47 R109
C102 .22μF
27C1000 EPROM
U35
CSOD
U36 DMAC
U37 7407
R79 3.3K
R78 56
R77 4.7K
EOP.CSX1
R98 47
R99 4.7K
RP10 4.7K
U52 74LS245
C120 .22μF
U53 74LS245
C121 .22μF
C92 .33μF
4.7K RP9
RP11 3.3K
IOR
IOW
IFRST
DMCD (15:0) (NC)
C101 .22μF
27C1000 EPROM
U34
CSEN
SD (7:0)
DATA (15:0)
CN18 FAN POWER
EMI 83
R114 3.3 1/2W
+12V
C23 47μF
LDS
UDS
RW
AS
DTACK
BEER
RST
7MHz
INT2
INT6
OVR
CONFIGIN
CONFIGOUT
BR
BG
BGACK
JP3
CSXO
XDREQ
XDACK
A (23:0)
D (15:0)

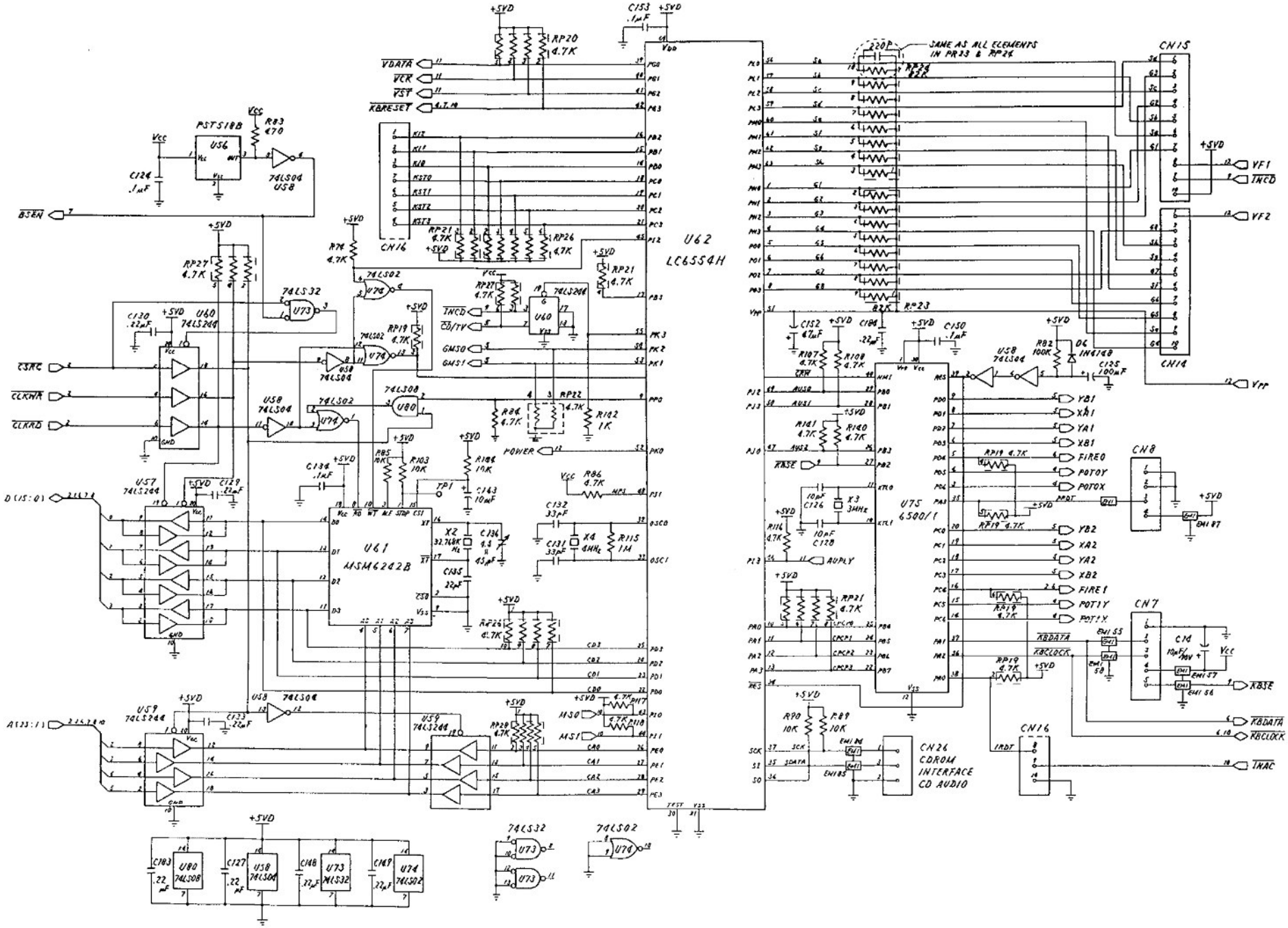
U62
LC6554H
U61
MSM6242B
U75
6500/1
CN15
CN14
CN8
CN7
CN16
CN26
CDROM
INTERFACE
CD AUDIO
SAME AS ALL ELEMENTS
IN PR23 & RP24
VDATA
VCK
VST
KBRESET
BSEN
CSRC
CLKWR
CLKRD
D(15:0)
A(23:1)
VF1
INCD
VF2
VPP
POWER
AUPLY
KBSE
KBDATA
KBCLOCK
INAC
+5VD
Vcc
GND

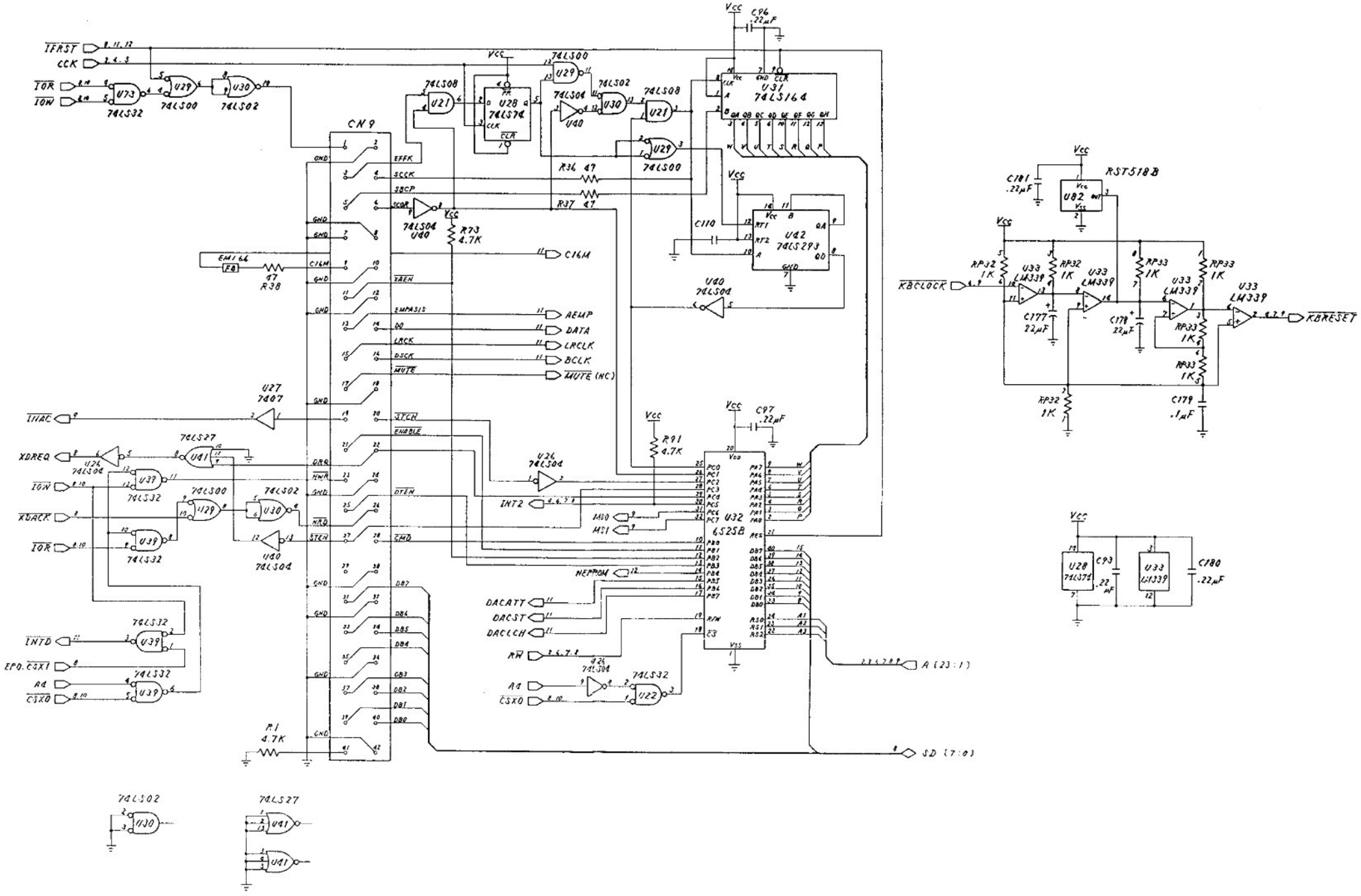

IFRST
CCK
IOR
IOW
74LS32
74LS00
74LS02
74LS08
74LS74
74LS04
74LS164
74LS293
CN9
EFFK
SCCK
SBCP
SCOR
C16M
XAEN
EMPASIS
DO
LRCK
DSCK
MUTE
STCH
ENABLE
DRQ
HWR
HRD
STEN
GMD
DB7
DB6
DB5
DB4
DB3
DB2
DB1
DB0
R36 47
R37 47
R73 4.7K
R38 47
C110
C96 .22μF
C97 .22μF
R91 4.7K
R1 4.7K
EMI 66
FB
AEMP
DATA
LRCLK
BCLK
MUTE (NC)
INAC
XDREQ
XDACK
INTD
EPO. CSX1
A4
CSX0
INT2
MS0
MS1
NEPROM
DACATT
DACST
DACLCH
RW
A (23:1)
SD (7:0)
6525B
RST518B
C181 .22μF
KBCLOCK
KBRESET
RP32 1K
RP33 1K
LM339
C177 22μF
C178 22μF
C179 .1μF
C93 .22μF
C180 .22μF

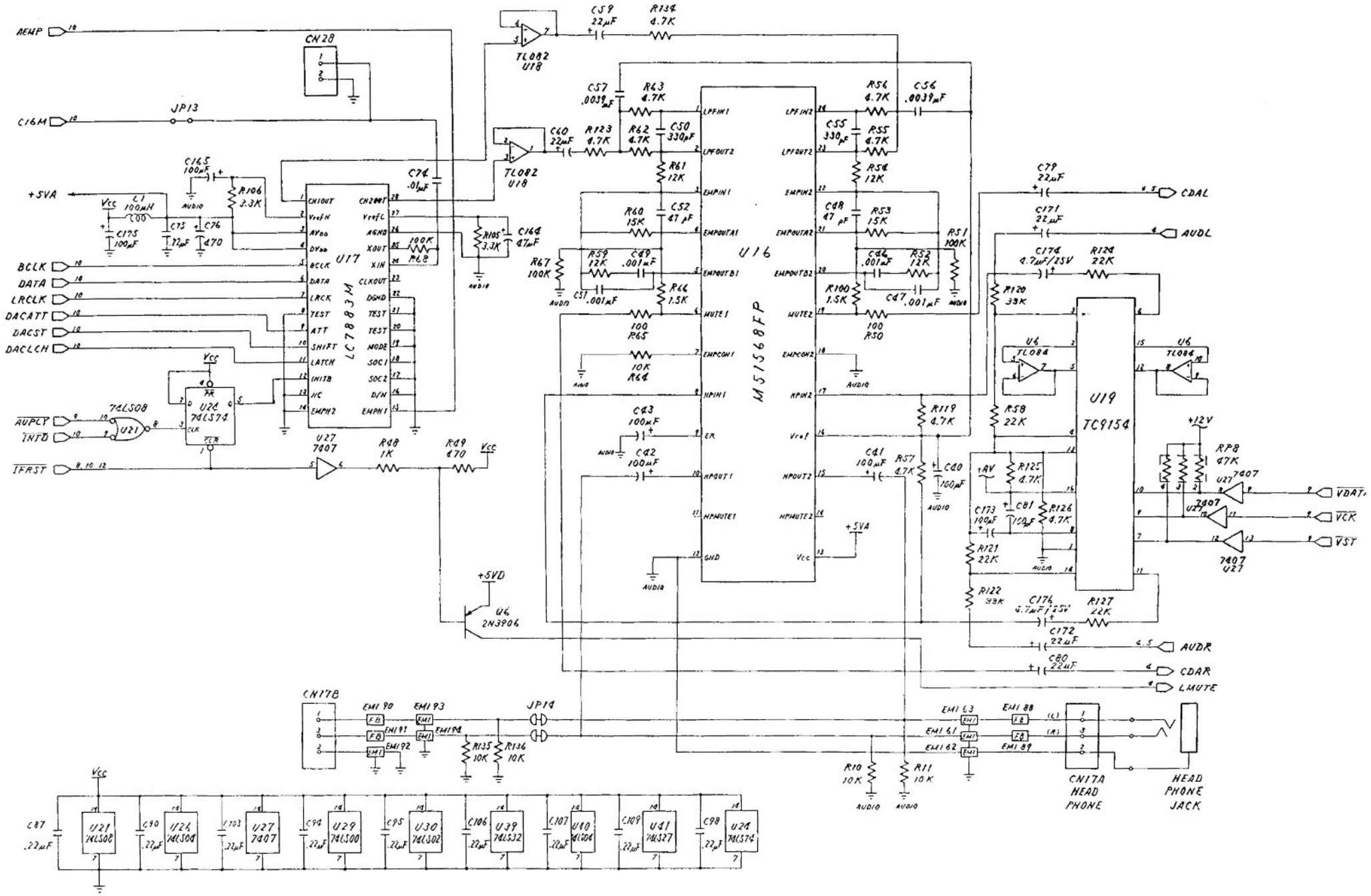
AEMP
C16M
JP13
CN28
+5VA
BCLK
DATA
LRCLK
DACATT
DACST
DACLCH
AUPLY
INTD
IFRST
U17
LC7883M
U16
M51568FP
U19
TC9154
TL082
U18
U21
74LS08
U24
74LS74
U27
7407
U6
2N3906
+5VD
CN17B
JP14
CN17A
HEAD
PHONE
HEAD
PHONE
JACK
CDAL
AUDL
AUDR
CDAR
LMUTE
VDAT
VCK
VST
+12V
+5VA
AUDIO

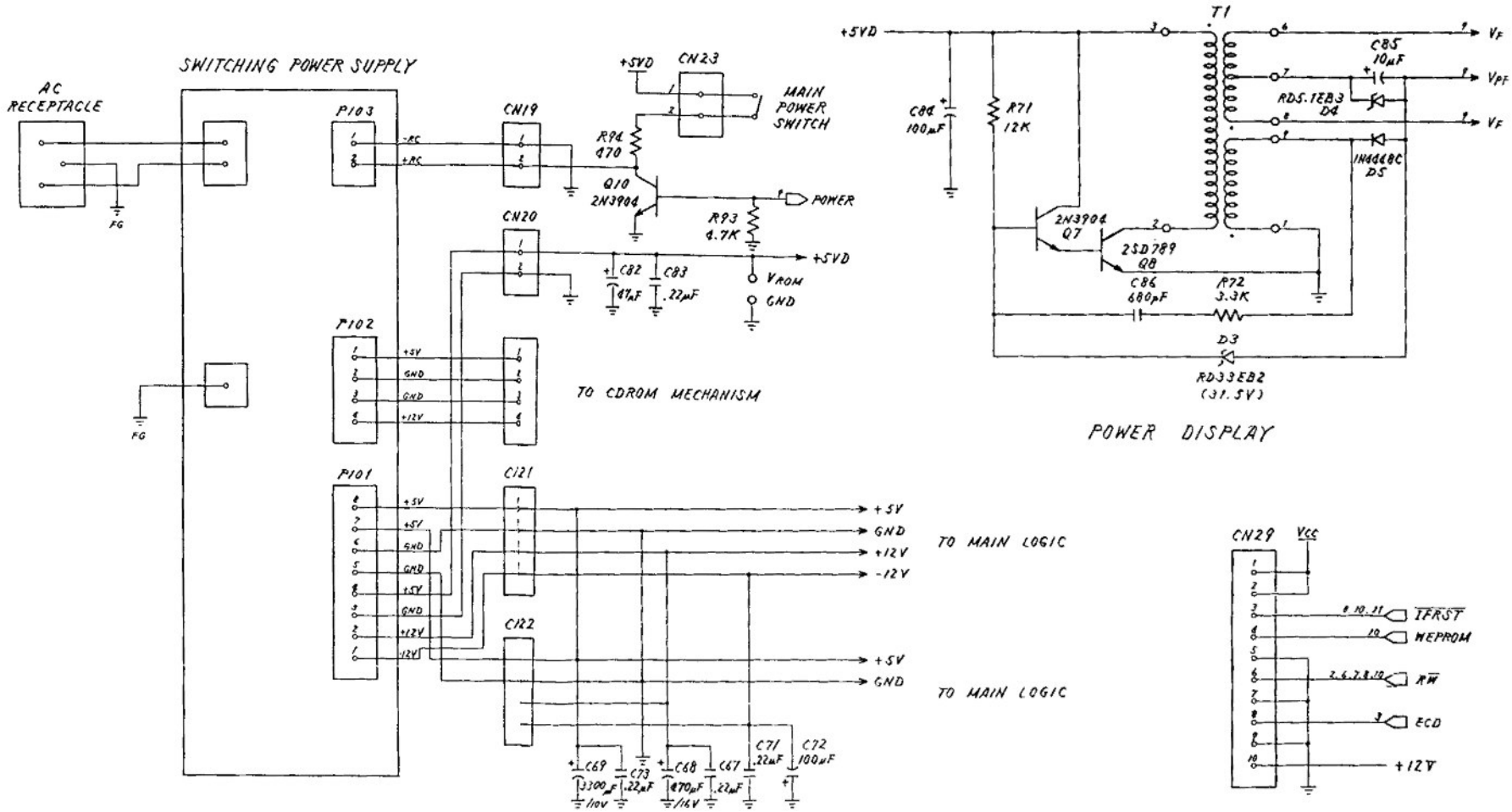
SWITCHING POWER SUPPLY
AC RECEPTACLE
FG
FG
P103
-RC
+RC
CN19
+5VD
CN23
MAIN POWER SWITCH
R94 470
Q10 2N3904
POWER
R93 4.7K
CN20
+5VD
C82 47μF
C83 .22μF
VROM
GND
P102
+5V
GND
GND
+12V
TO CDROM MECHANISM
P101
+5V
+5V
GND
GND
+5V
GND
+12V
-12V
C121
C122
+5V
GND
TO MAIN LOGIC
+5V
GND
TO MAIN LOGIC
C69 3300μF/10V
C73 .22μF
C68 470μF/16V
C67 .22μF
C71 .22μF
C72 100μF
T1
+5VD
C84 100μF
R71 12K
C85 10μF
RD5.1EB3 D4
1N4148C D5
VF
VPF
VF
2N3904 Q7
2SD789 Q8
C86 680pF
R72 3.3K
D3
RD33EB2 (31.5V)
POWER DISPLAY
CN29
Vcc
8,10,11
IFRST
10
WEPROM
2,6,7,8,10
RW
3
ECD
+12V