# Professional optical disc drive multi standard 22VP380

Service
Service
Service

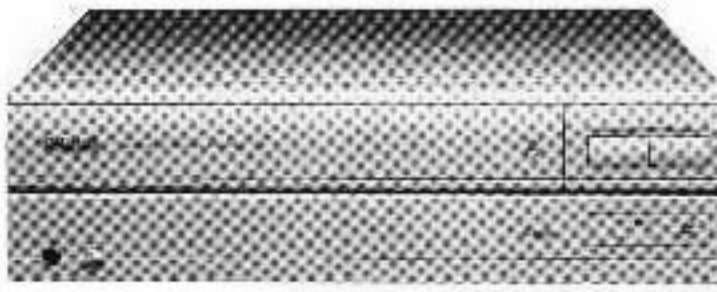

45 802

# ServiceManual

LASER DISC

In this manual only the differences between the VP310 and the VP380 are mentioned.
For repair and partslist the Service Manual of the VP310 must be used.
Differences in the VP380:


| Chapter | Page |
|---|---|
| Technical data | 2-1 |
| Control and Connection | 3-1 |
| Partslist cabinet VP380 | 5-1 |
| Blockdiagram | 6-1 |
| Wiring digrams | 7-1 |
| Multi panel diagrams | 10-1 |
| Multi panel lay-out | 10-2 |
| $\mu$ processor diagram | 11-1 |
| $\mu$ processor lay-out | 11-2 |
| Video signal path description | 12-1÷12-3 |
| Measurements and adjustments video | 12-4 ÷12-5 |
| Partslist video | 12-6 |
| Video panel lay-out chip side | 12-7 |
| Video schematic diagram | 12-8÷12-11 |
| Video panel lay-out component side | 12-12 |
| Analog audio panel lay out and partslist | 13-1 |
| Analog audio schematic diagram | 13-2 |
| List of F-codes commands | 15-2 |
| Additional information | 15-2 |


(S)
Varning!
Osynlig laserstrålning när denna del är öppnad och spärren är urkopplad. Betakta ej strålen.

(DK)
Advarsell
Usynlig laserstråling ved abning når sikkerhedsafbryde er une af funktion. Undgå udsaettelse for stråling.

(SF)
Varoitus!
Laite sisältaa laserdiodin, joka lähettää näkymätöntä silmille vaarallista lasersäteilyä.

(GB)
Safety regulations require that the set be restored to its original condition and that parts which are identical with those specified be used.

Published by IMS Printed in The Netherlands ©Copyright reserved Subject to modification

PHILIPS

PHILIPS

CS 43 83

## VP 312 VP 380 LASER DISC DRIVE

FRONT VIEW

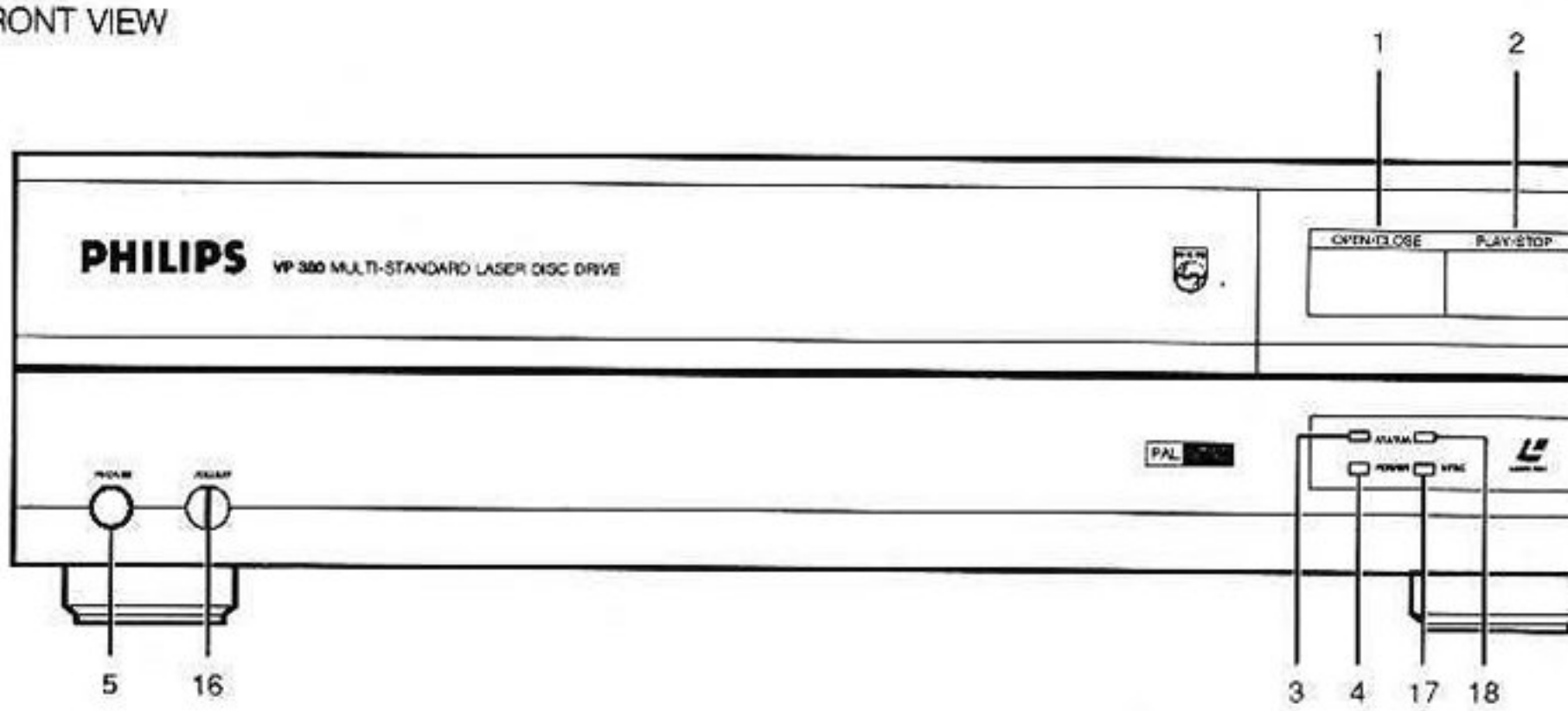


**VP 380 illustrated**

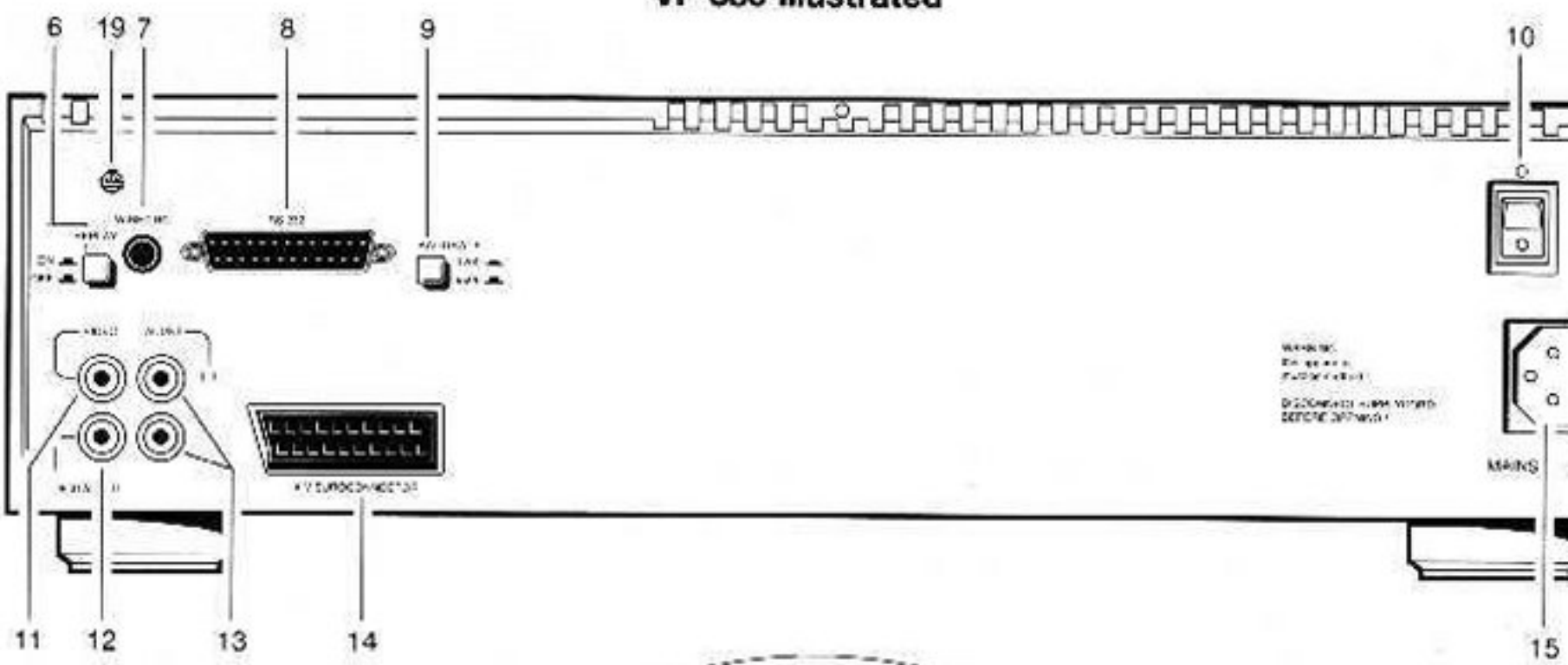


REAR VIEW

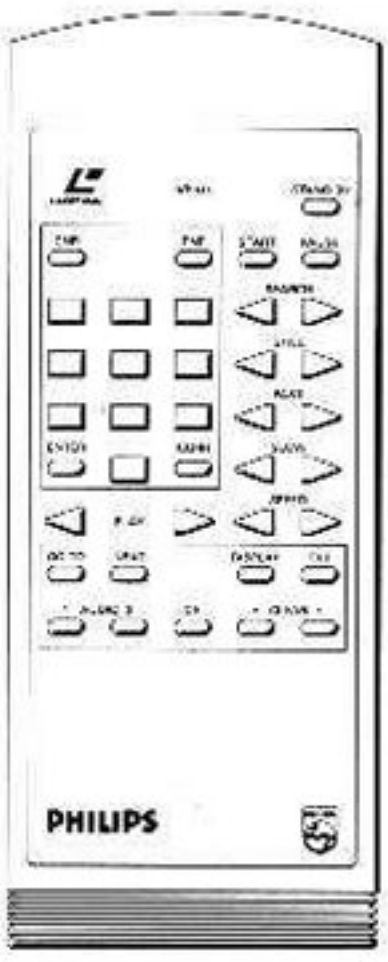

| | |
|---|---|
| Electrical safety | acc. to IEC 950 class I |
| Operational conditions | 10 to 35°C |
| Rel. humidity | 20 to 80 % |
| Storage conditions | -40 to 70°C |
| Rel. humidity | 5 to 90 % |
| Dimensions | 420 x 125 x 415 mm |
| disc-tray open | 420 x 125 x 655 mm |
| Weight | 9 kg (approx.) |
| TV system | 625/50 PAL |
| | VP380 : 625/50 PAL |
| | 525/50 NTSC |

**Video**

| | |
|---|---|
| CVBS output | |
| Cinch | 1 $V_{pp}$ ± 50 mV into 75 ohm |
| Euroconnector pin 19 | 1 $V_{pp}$ ± 50 mV into 75 ohm |
| RGB output | |
| Europconnector | |
| R (pin 15) | 0.7 V into 75 ohm |
| G (pin 11) | 0.7 V into 75 ohm |
| B (pin 7) | 0.7 V into 75 ohm |
| Video bandwidth | RGB : PAL MHz (-3 dB),3 |
| | CVBS : MHz (-3 dB),3 encoded |
| | VP380 : NTSC CVBS 4.2 MHz (-8 dB) |
| Signal-to-noise ratio | 40 dB typ. unweighted (disc dependent) |
| | 50 dB typ. weighted (disc dependent) |
| Timebase instability | less than 20 ns (normal play) |

**Audio**

**Analog**

| | |
|---|---|
| Audio output | 550 mV r.m.s./1k ohm at 100 % |
| Cinch | modulation depth |
| Audio output | |
| Euroconnector pins 1 & 3 | 275 mV r.m.s./1k ohm at 100 % modulation depth |
| Audio bandwidth | 20 - 20 000 Hz - 3 dB |
| Signal-to-noise ratio | >50 dB weighted |
| | VP380 : CX on > 62 dB |
| | (disc dependent) |
| Channel separation | >50 dB |

**Digital**

| | |
|---|---|
| Output voltage | Cinch 200 mVrms ±1.5 dB at -20 dB, 1 KHz |
| Euroconnector pins 1 x 3 | Cinch 100 mVrms ±1.5 dB at -20 dB, 1 KHz |
| Signal to noise ratio | ≥90 dB |
| Dynamic range | ≥86 dB |
| Channel separation | ≥80 dB |
| Digital out | 0.5 $V_{pp}$ ± 20 % into 75 ohm |

Y/C CONNECTOR

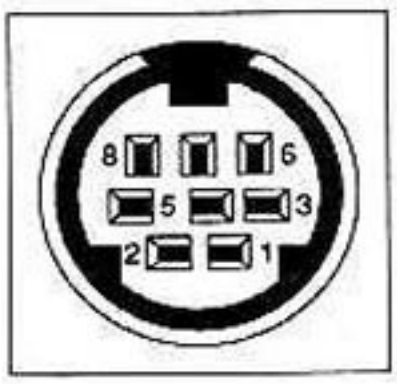


| PIN | SIGNAL |
|---|---|
| 1 | GND |
| 2 | GND |
| 3 | Y output |
| 4 | C output |

| pin | signal |
|---|---|
| 1 | audio out (right) |
| 2 | not connected |
| 3 | audio out (left) |
| 4 | audio earth |
| 5 | blue earth |
| 6 | not connected |
| 7 | blue out |
| 8 | disc drive status 12 V |
| 9 | green earth |
| 10 | not connected |
| 11 | green out |
| 12 | not connected |
| 13 | red earth |
| 14 | earth |
| 15 | red out |
| 16 | fast blanking : 2.5 V into 75 ohm (RGB status) |
| 17 | CVBS earth |
| 18 | RGB status earth |
| 19 | CVBS out (also acts as sync out when using R |
| | not connected |
| 20 | not connected |
| 21 | socket earth |

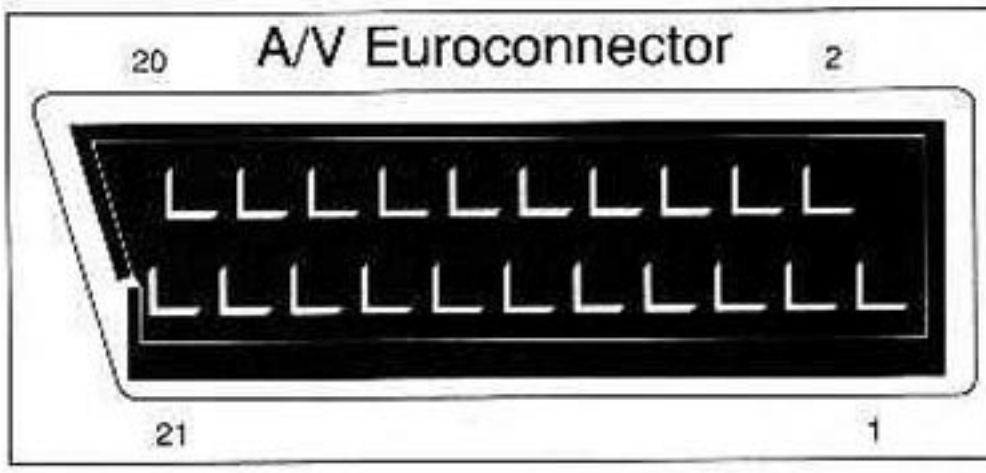


**RS232 interface**

Serial computer interface, in accordance with international commu cation standard EIA-232-D.
Full duplex
1200/9600 baud (selectable)
8 data bits, 1 stop bit, no parity

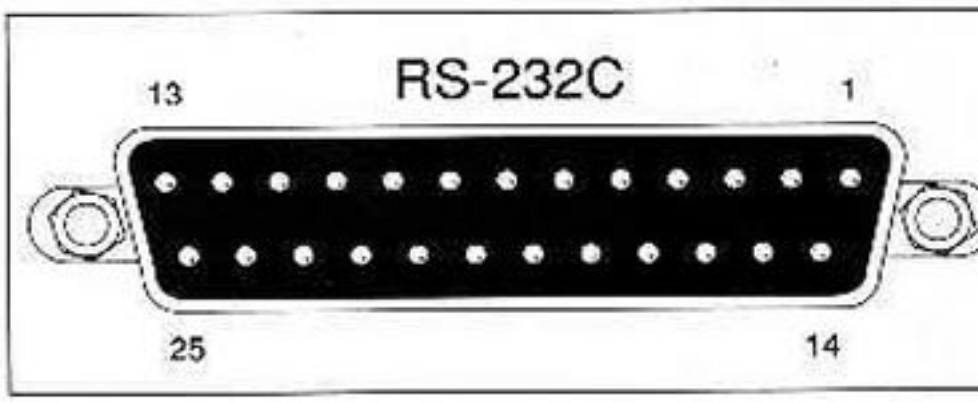


The drive is fitted with a 25-pole female D-type connector with following pin connections :

| PIN | SIGNAL |
|---|---|
| 2 | (T x D) transmitted date from drive to computer |
| 3 | (R x D) received data from computer to drive |
| 5 | (CTS) clear to send : a signal from computer to drive indicating the computer is ready to receive data |
| 7 | (GND) logic ground |
| 20 | (DTR) data terminal ready : a signal from drive to computer indicating the drive is ready to receive data. |

## Fault symptoms and possible causes

**Drive remains in standby mode**
- Check if transport locks have been removed.

**Disc does not eject**
- Check the REPLAY button.
- Check that the drive is connected to the mains supply and that the POWER indicator is lit.

**Disc does not rotate**
- Check that the drive is receiving power : the POWER indicator should be lit.
- Check that the disc-tray is properly closed.
- Check that the disc is properly loaded.

**Disc rotates but picture is weak or absent**
- Check the connection between monitor and drive.
- Check that the disc has been loaded correctly (label up) on the disc-tray. (Some discs have program content on one side only.)
- Press the [>] section of the SEARCH button.
- The drive is in the pause mode : Press the [>] section of the PLAY button.
- **VP380 only.**
  If the sound is good but picture is poor (rolling/tearing/no colour) check that the disc being played is the expected television system standard (PAL/NTSC).

**Drive sticks at particular point on disc**
- Press the [>] section of the SEARCH button momentarily to skip over the affected part.
- Remove the disc and wipe both surfaces clean with a soft, dry cloth to remove possible opaque surface marks.

**Special effects (still, slow, reverse, fast) do not function**
- Check that a CAV disc is being played; when playing CLV discs, the special-effects buttons do not function.

**Unstable still picture**
- If still pictures taken from a fast moving scene sometimes flicker, this is no fault of the drive but results from the basic program material used for disc production.

**Good picture but no sound**
- Make sure that the drive is in its forward playing mode (in all other modes there is no sound).
- Check that the sound channels AUDIO 1 (left channel) and/or AUDIO 2 (right channel) are switched on.
- If an LV-ROM disc is being played, there may be data and therefore no sound on the disc. Try a non-LV-ROM disc.

**Digit buttons are inoperative**
- Check REPLAY button.
- Check whether the picture number or chapter number is displayed on the monitor. If not, press PNR or CNR.

**Remote control does not function correctly**
- Check batteries in remote control handset.
- If the drive is in the replay mode, most controls are disabled.
- Check mini jack plug is inserted correctly in the WIRED RC socket.

**The drive fails to respond when under computer control**
- Check baud rate and parity.
- Check the connections to the relevant interface.
- Ensure that DATA IN and DATA OUT are the right way around (RS232-C).
- Check that the DTR signal from the drive is being received by the computer (RS232-C).
- Check the CTS signal of the computer.
- To reset drive, switch the power off, wait ten seconds, switch power on.

## Technical information

**Optical discs**

LaserVision/Laser Disc

| | |
|---|---|
| Disc diameter | 300 mm or 200 mm |
| Disc thickness | 2.7 mm |
| Disc speed | CAV disc : 1500 r.p.m. |
| | CLV disc : 1500-570 r.p.m. |
| Maximum capacity | |
| 300 mm - disc | CAV disc : 54 000 pictures per side |
| 200 mm - disc | CAV disc : 24 000 pictures per side |
| Max. playing time | |
| 300 mm - disc | CAV disc : 36 minutes per side |
| | CLV disc : 1 hour per side |
| 200 mm - disc | CAV disc : 16 minutes per side |
| | CLV disc : 24 minutes per side |
| Average track pitch | 1.6 - 1.8 $\mu$m |

**Compact disc**

| | |
|---|---|
| Disc diameter | 120 mm or 80 mm |
| Disc thickness | 1.2 mm |
| Disc speed | 600 - 200 r.p.m. |
| Maximum capacity | |
| 120 mm disc | 74 minutes |
| 80 mm disc | 26 minutes |
| Average track pitch | 1.6 $\mu$m |

**Drive**

Front loading motor-powered disc-tray

startup time

| | |
|---|---|
| LV 300 mm : | $\leq$ 20 sec |
| LV 200 mm : | $\leq$ 14 sec |
| CD 120 mm : | $\leq$ 10 sec |
| CD 80 mm : | $\leq$ 10 sec |
| Clip 120 mm : | $\leq$ 10 sec |

unload time
(time between Eject command and tray open)

| | |
|---|---|
| LV 300 mm : | $\leq$ 9 sec |
| LV 200 mm : | $\leq$ 4 sec |
| CD 120 mm : | $\leq$ 3 sec |
| CD 80 mm : | $\leq$ 3 sec |
| Clip 120 mm : | $\leq$ 3 sec |

SSL (solid state laser)

| | |
|---|---|
| Laser type | AlGaAs semiconductor |
| Wavelength | 780 nm |
| Aperture | 0.5 |
| Output of laser | < 5 mW |

| | |
|---|---|
| Random access time | |
| CAV, 300 mm | typically 3 sec max. |
| CLV, 300 mm | typically 12 sec max. |
| On-board programming | Up to 2 x 8 picture number/time code segment and 2 x 8 chapter segments |
| Capacity of on-board character display | 12 lines of 24 characters each (F-C code programmable) |
| Program retention (with power off) | not retained (battery - backed memory retrofittable) |
| Mains voltage | 220 to 240 V a.c. (± 10 %) |
| Mains frequency | 50 to 60 Hz (+/- 5 %) |

## µProcessor diagram

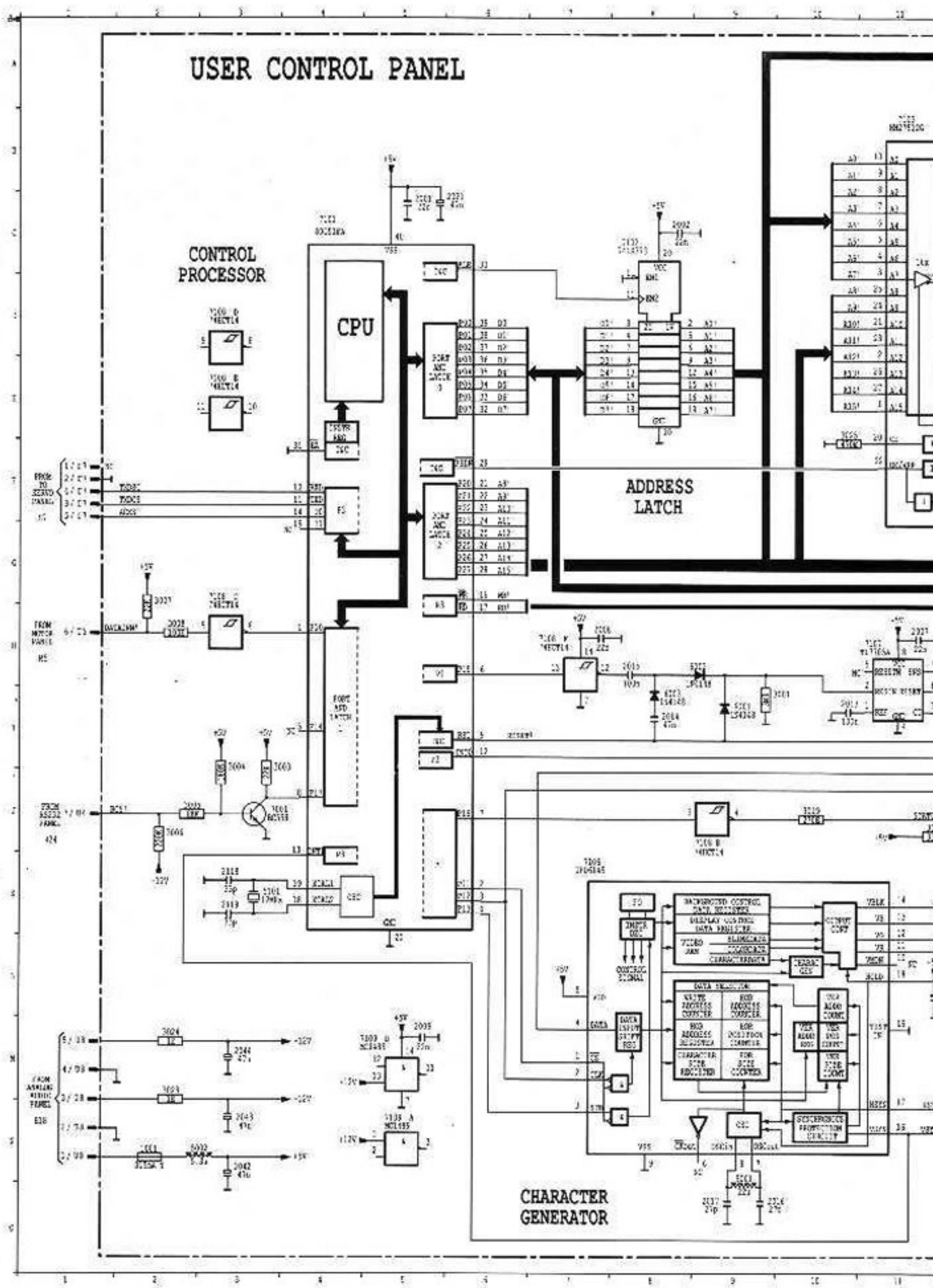

EPROM

8K RAM

DUART

## µProcessor lay-out

| | | | | | | | | | | |
|---|---|---|---|---|---|---|---|---|---|---|
| 1002 D1 | 2002 C8 | 2009 B5 | 2016 B3 | 2028 C4 | 3004 D4 | 3008 B1 | 3015 C1 | 3025 A7 | 6002 B7 | 7106 B3 |
| 1004 D1 | 2003 B7 | 2010 B4 | 2017 B3 | 2030 A4 | 3001 B8 | 3009 C1 | 3016 B1 | 6001 B3 | 7001 C2 | 7107 B4 |
| 1005 C2 | 2004 B7 | 2011 B4 | 2018 A6 | 2031 A4 | 3002 D2 | 3010 C1 | 3017 B4 | 6002 C3 | 7101 C6 | 7108 C3 |
| 1006 B1 | 2005 A5 | 2012 A8 | 2019 A7 | 2032 B4 | 3004 C1 | 3011 D1 | 3018 C1 | 6101 B7 | 7102 C6 | 7109 B3 |
| 1007 B2 | 2006 C2 | 2013 B8 | 2021 A6 | 2033 B4 | 3005 D1 | 3012 D1 | 3019 C1 | 6102 C4 | 7103 C7 | 7110 B4 |
| 1008 D2 | 2007 A8 | 2014 A8 | 2025 A5 | 2042 C4 | 3006 D1 | 3013 B1 | 3023 D3 | 6601 B7 | 7104 C7 | 9050 A5 |
| 2001 A5 | 2008 B3 | 2015 B8 | 2026 C4 | 2043 C3 | 3007 B1 | 3014 B1 | 3024 C2 | 6602 B8 | 7105 C6 | F001 D2 |

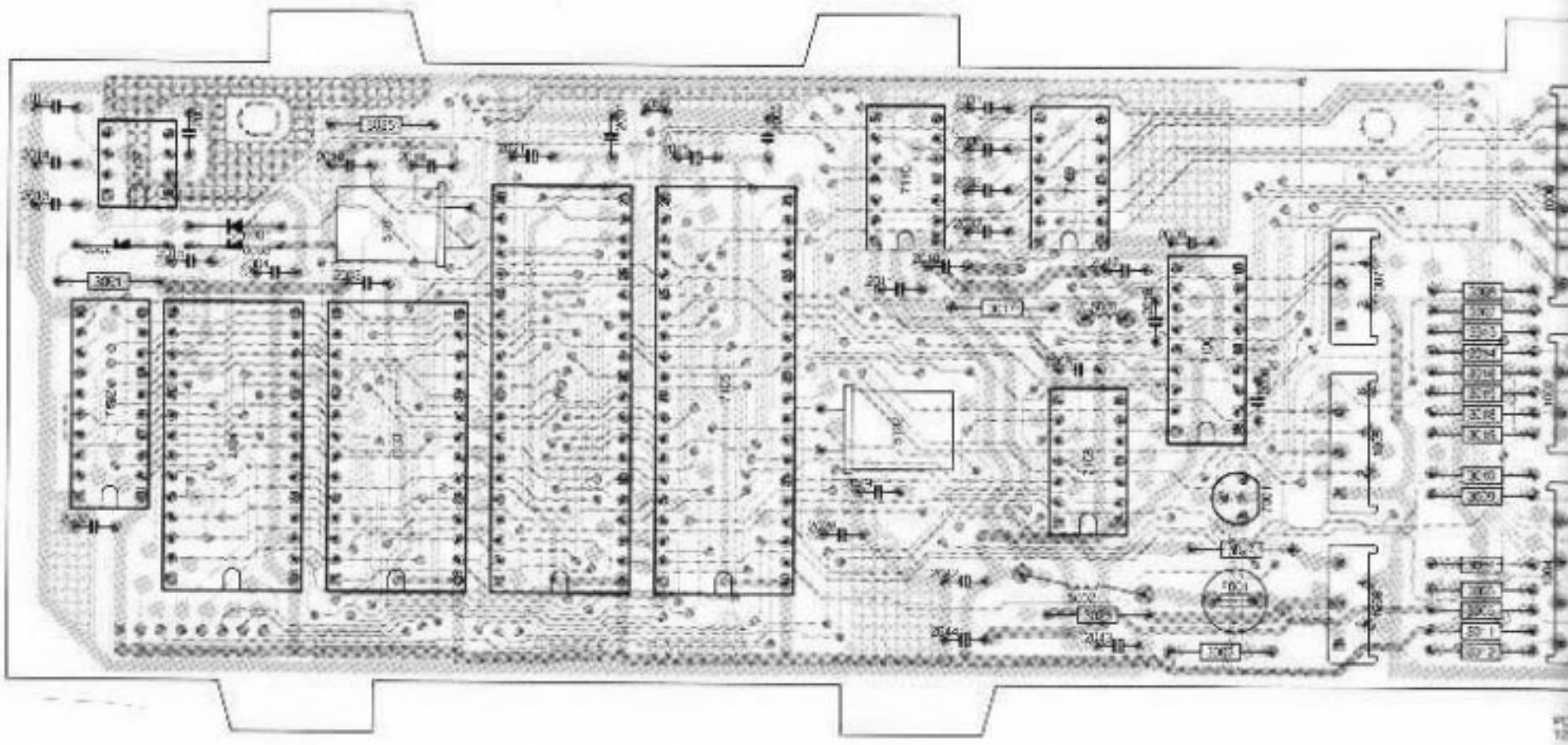

| | | | | | | | | | | |
|---|---|---|---|---|---|---|---|---|---|---|
| 1002 D1 | 2007 C8 | 2009 B3 | 2016 B3 | 2028 C4 | 3004 D4 | 3008 B1 | 3015 C1 | 3025 A7 | 6002 B7 | 7106 B3 |
| 1004 D1 | 2008 B7 | 2010 B4 | 2017 B3 | 2030 A4 | 3001 B8 | 3009 C1 | 3016 B1 | 6001 B3 | 7001 C2 | 7107 B4 |
| 1005 C2 | 2004 B7 | 2011 B4 | 2018 A6 | 2031 A4 | 3002 D2 | 3010 C1 | 3017 B4 | 6002 C3 | 7101 C6 | 7108 C3 |
| 1006 B1 | 2005 A5 | 2012 A8 | 2019 A7 | 2032 B4 | 3004 C1 | 3011 D1 | 3018 C1 | 6101 B7 | 7102 C6 | 7109 B3 |
| 1007 B2 | 2006 C2 | 2013 B8 | 2021 A6 | 2033 B4 | 3005 D1 | 3012 D1 | 3019 C1 | 6102 C4 | 7103 C7 | 7110 B4 |
| 1008 D2 | 2007 A8 | 2014 A8 | 2025 A5 | 2042 C4 | 3006 D1 | 3013 B1 | 3023 D3 | 6601 B7 | 7104 C7 | 9050 A5 |
| 2001 A5 | 2008 B3 | 2015 B8 | 2026 C4 | 2043 C3 | 3007 B1 | 3014 B1 | 3024 C2 | 6602 B8 | 7105 C6 | F001 D2 |

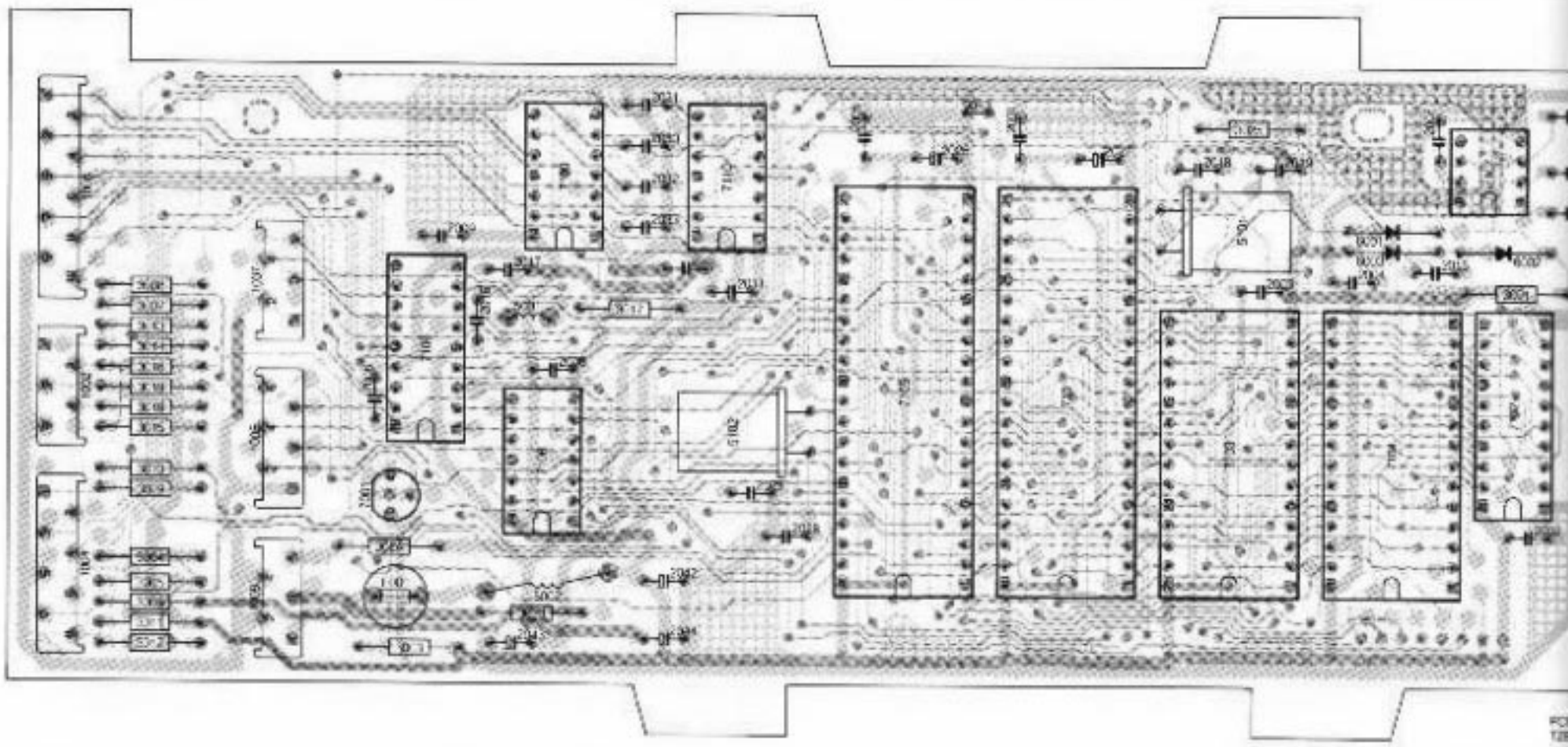

## PARTSLIST µ-PROCESSOR

### connectors

| | | |
|---|---|---|
| 1001 | 4822 071 53151 | 19372(315MA) |

### ⊣⊢

| | | |
|---|---|---|
| 2001 | 4822 122 30103 | 22NF80% 63V |
| 2002 | 4822 122 30103 | 22NF80% 63V |
| 2003 | 4822 122 30103 | 22NF80% 63V |
| 2004 | 4822 122 30103 | 22NF80% 63V |
| 2005 | 4822 122 30103 | 22NF80% 63V |
| 2006 | 4822 122 30103 | 22NF80% 63V |
| 2007 | 4822 122 30103 | 22NF80% 63V |
| 2008 | 4822 122 30103 | 22NF80% 63V |
| 2009 | 4822 122 30103 | 22NF80% 63V |
| 2010 | 4822 122 30103 | 22NF80% 63V |
| 2011 | 4822 122 30103 | 22NF80% 63V |
| 2012 | 4822 124 22799 | 1NF 5% 250V |
| 2013 | 5322 121 42386 | 100NF 5% 63V |
| 2014 | 4822 121 43526 | 47NF 5% 100V |
| 2015 | 5322 121 42386 | 100NF 5% 63V |
| 2016 | 4822 122 30045 | 27PF 2% 100V |
| 2017 | 4822 122 30045 | 27PF 2% 100V |
| 2018 | 5322 122 32072 | 33PF |
| 2019 | 5322 122 32072 | 33PF |
| 2021 | 4822 124 40433 | 47UF20% 25V |
| 2025 | 4822 124 40433 | 47UF20% 25V |
| 2028 | 4822 122 31056 | 12PF 2% 100V |
| 2029 | 4822 122 31056 | 12PF 2% 100V |
| 2030 | 4822 122 32062 | 470PF 2% 100V |
| 2031 | 4822 122 32062 | 470PF 2% 100V |
| 2032 | 4822 122 30045 | 27PF 2% 100V |
| 2033 | 4822 122 30045 | 27PF 2% 100V |
| 2042 | 4822 124 40433 | 47UF20% 25V |
| 2043 | 4822 124 40433 | 47UF20% 25V |
| 2044 | 4822 124 40433 | 47UF20% 25V |

### ⊣▭⊢

| | | |
|---|---|---|
| 3001 | 4822 050 23305 | 3M30 1% 0,6W |
| 3004 | 4822 050 21804 | 180K00 1% 0,6W |
| 3005 | 4822 050 26803 | 68K00 1% 0,6W |
| 3006 | 4822 050 22204 | 220K00 1% 0,6W |
| 3018 | 4822 050 23301 | 330R00 1% 0,6W |
| 3019 | 4822 116 52217 | 270E 5% 0,5W |
| 3023 | 4822 052 10108 | 1R00 5% 0,33W |
| 3024 | 4822 052 10108 | 1R00 5% 0,33W |
| 3025 | 4822 116 52224 | 470E 5% 0,5W |

### ⌒

| | | |
|---|---|---|
| 5001 | 4822 157 60032 | |
| 5002 | 4822 158 10101 | |
| 5101 | 4822 242 73759 | 12MHZ |

### ⊣▶

| | | |
|---|---|---|
| 5102 | 5322 242 71867 | 432214304370 |
| 6001 | 4822 130 30621 | 1N4148 (UAW) |
| 6002 | 4822 130 30621 | 1N4148 (UAW) |
| 6003 | 4822 130 30621 | 1N4148 (UAW) |

### ⊣Q

| | | |
|---|---|---|
| 7001 | 4822 130 40937 | BC548B |

### ▭

| | | |
|---|---|---|
| 7101 | 4822 209 63702 | 80C51FA |
| 7102 | 5322 209 11118 | PC74HCT373P |
| 7103 | 4822 209 63701 | EPROM |
| 7104 | 4822 209 72681 | UPD4364C-20L |
| 7105 | 4822 209 62498 | MC2681P |
| 7106 | 4822 209 60587 | UPD6145C-001 |
| 7107 | 4822 209 82386 | TL7705ACP |
| 7108 | 5322 209 11378 | PC74HCT14P |
| 7109 | 5322 209 85619 | MC1489AP |
| 7110 | 5322 209 84307 | MC1488P |

## VIDEO SIGNAL PAHT DESCRIPTION

### 1.1 High frequency input

The HF-AV signal enters the video panel on connector 2V11/.
The HF-A (analog audio) leaves the video panel via buffer 7312 on connecter 2V17. The amplitude of the HF-AV is 400 mV at the CAV disk-inside and 800 mV at the CAV disk outside.

The video HF is then split-up in a PAL- and NTSC branch.
The PAL-branch via buffer 7315 consists of a 1,7 MHz HPF-5304 and a double notch-filter 5311-684 kHz and 5313-1066 kHz to remove the analog audio carriers.
The NTSC-branche via buffer 7316 consists of a 3,22 MHz HPF-5300 and a double notch-filter 5308-2,3 MHz and 5316-2,8 MHz to remove the analog audio carriers.

After this a LPF of 14 MHz-5314 and 5315 for both the PAL and NTSC-signal.

### 1.2 Modulation transfer function

The filtered HF-video signal comes at pin 7 of 7903-A. Here the MTF takes place for PAL with 5305-8 MHz and for NTSC with 5303-10 MHz.
In 7903-B the MTF-corrected signal is amplified 8 dB.

### 1.3 Demodulation

In 7903-C the signal at pin 14 is demodulated.
Between pin 18 and 23 a separate LPF for PAL and NTSC takes place. For PAL via 5317-5 MHz and for NTSC via 53123-4,2 MHz 7901 is a video switch for PAL/NTSC.
In 7903-C pin 23 deemphasis takes place for PAL and NTSC. For NTSC 3387, 2387 and 3319 are switched parallel to 3333 and 2325. The AGC control will keep the video amplitude on pin 29 at 0,85 Vpp.

### 1.4 Drop out correction

The next part of 7903-C is the drop-out function.
Drop-outs are detected in the limiter and via block D.O.D. a DRQ (data request) on pin 17 can be blocked. The data on
pin 25 is for the 24-bit or manchester decoder.

On pin 48 chroma-signal is available not time base corrected. The chroma separator can be adjusted for 3,66 MHz this is the middle of 4,43 MHz (PAL) and 3,58 MHz (NTSC) with 5310 on
pin 1.
Pin 2 will provide the composite sync. signal from the disk-video.

Note : 3347, 3382 and 3381 are not mounted because the feed forward servo of the time base correction is not within specification for NTSC.

7902 is the drop-out delay line. the signal at pin 6 is notched at 4,43 MHz with 5302. At pin 7 the F72 clock for NTSC (7,1 MHz is double NTSC chroma carrier) is provided. For PAL an additional delay is needed of 0,5 µS with 5318 and 5306 switched via 7313 and 7321 because the NTSC delay time is 36,5 µS.
The drop-out LPF 5301-3,75 MHz is to remove the clock pulse rests. The drop-out amplitude can be adjusted with 3338 for the same amplitude as for the not drop-out signal.

### 1.5 Time base correction

Between pin 29 of 7903-C and pin 31 of 7903-D t
time base is corrected. See chapter time base correction.

5307 removes double carrier rests with a notch c
15,5 MHz.
7904 is the time base correction delay line.
5400 is a LPF of 5,9 MHz for removing the clock
pulse rests.
The time base corrected video enters the 7903-D
pin 31 (Part II video schematic) first the signal is
controlled for a constant DC-level with 2350, ther
the time fault measuring the chroma and compos
sync. signals are removed from the video signal a
available on respectively pin 44 and 46. On pin 45
chroma separation filter can be adjusted with 530
on 3,66 MHz.

### 1.6 Noise suppression

After the special burst suppression in 7903-D the r
suppression filter is located, this filter is only activ
via 7318 on high frequencies in the luminance sig
During teletext lines the noise suppression filter is
switched off with the VWIN-signal (vertical windov
on pin 36.
In NTSC the capacitor 2382 is switched to ground
2382 and 2383 are switched parallel.
The half picture part in 7903-D is not used.
Before the video signal leaves the 7903-D the signa
amplified to a level of 1 Vpp.

### 1.7 Video processing

The DC-level after amplifier 7305, 7306 is 3,4V, th
signal is split-in a video and a teletext signal line.
teletext the signal part under the black level is cut
in 6811 and 6812 and delayed in 5681 with 400 nS
and amplified in 7681 and 7682. In multiplexer 792
the teletext lines are mixed with the CVBS-signal
means of the TXT.WIN (TXT windows) and INT.VI
(Internal video) with respect that no teletext is
possible when the player is starting up.
With the SDC2 signal (sand castle 2) the CVBS ar
TXT-CVBS are clamped on the black level.

The video signal line from C-7306 is split-up in a
NTSC and PAL luminance/chrominance dividers.
PAL divider, the lower line in the schematic diagra
part II, is the same as in the VP310 also the
adjustments are the same.

In the NTSC divider first the signal is delayed one
time. At pin 2 of 5513 is 180° shifted to the signal
C-7511. These two signals are added to remove th
sub carrier of
3,58 MHz and becomes available on e-7513, no
chrominance is left here. On e-7512 only
chrominance is available because the signal on
1-5513 is in phase with the signal on e-7511. Filter
5515 removes luminance rests on 3,58 MHz.
With 5514 the group delay time is corrected
(minimum chrominance signal on e-7513). The
flatness of the full field multi burst is adjusted with
5515 (with NTSC test disc). Filter 5516 on 3,58 MH
± 600 kHz is for limiting the bandwidth.

### 1.8 RGB decoder/encoder

The RGB multi standard decoder 7922 is adjusted for PAL in the same procedure as for the VP310 after that the specific NTSC-adjustments (HEU and 7,16 MHz loopfilter). The loopfilter on pin 24 and 25 is active for NTSC when the DC-level is low, the filter is responding on the HUE-adjustment potentiometer 3580. In NTSC the H/2 demodulator is controlled with 3559 and for PAL with 3560.
SDC1 and SDC2 (sand castle) are added to the frame pulse and feed to pin 7 of 7922.

On pin 12, 14 and 16 the characters are inserted with blanking signal on pin 9.
The RGB output of 7922 on pin 13, 15 and 17 are followed by sync. removers respectively 7601, 7602 and 7610, 7611 and 7612, 7613. After these sync. removers, the filters 5601, 5611 and 5614 will filter the double subcarrier frequency of 7,78 MHz between PAL and NTSC out.

The red and green color signals are going via potmeter 3608 and 3611 for amplitude adjustment to the encoder 7925 pin 2 and 3. the blue signal is going direct to the encoder pin 4. The encoder is functioning to the PAL standards when the Q-PAL line is high the Q-NTSC line is high on pin 7 of 7925. The Q-PAL (Quasi-PAL) will switch the 4,43 MHz subcarrier frequency from X-tall 5675 to pin 6 of 7925 when the Q-PAL signal is low. The RGB output is buffered in the IC and fed to the scart connector. The Y-output on pin 16 is going via a delay line of 270 ns to pin 18 where it is added to the chrominance signal (for PAL and NTSC) chrominance coming from pin 15 is going via a switchable filter (PAL/NTSC) to the encoder pin 17.
On pin 20 the CVBS signal is coming out and goes to the multiplexer 7926 on part II for mixing with teletext lines.
Luminance and chrominance is also going via buffers 7658 and 7651 to a separate Y/C output connector.
The composite sync. (C.S.) is coming into the encoder on pin 10 for NTSC 15734 Hz and for PAL 15625 Hz.

### 1.9 The time base correction

The TBC-MD 7911 IC is in the VP380 multi standard position working with a 14,32 MHz Kristal 5700 instead of the 17,7 MHz in the VP310.

The TBC-MD is normal in master mode. When a CAV disc is started up the IC is switched for a short moment to slave-mode this is to lock the video from the disc. When the disc is locked to the Ref H (Reference signal) the TBC-MD is switch to master-mode again.

The TBC-MA 7910 is switched between PAL and NTSC via NTSC-A on pin 2.

## MEASUREMENTS AND ADJUSTMENTS VIDEO

### 1. Introduction

#### 1.1 Required measurement equipment

The required measure equipment:
- Oscilloscope 50 MHz with TV triggering
- Frequency counter
- Color monitor with RGB and CVBS and Y/C input
- HF generator multistandard 1 KHz - 10 MHz
- Multimeter
- PAL video test disc 4822 397 30207
- NTSC Video test disc 4822 397 30244

#### 1.2. Adjustment conditions

- When a video disk is required search for a colour bar and the player mode is 'STILL PICTURE' unless otherwise mentioned.
- Carry out adjustments after a warm-up time of 5 minutes

#### 1.3. Adjustments when item replaced

| Replace | Adjust |
|---|---|
| 7903 | 5303, 5303, 3338, 5309 |

### 2. DC voltages measured with the multimeter

#### 2.1. – Reference point for DC-measurements = GND on connector 1V12.

| Measurement point | designation in schematic diagram | Value |
|---|---|---|
| connector 6V12 | (+5V) | +5.30 Vdc |
| 12 7903 | TEA7650 pin 12 = +5VA | +5.18 Vdc |
| 30 7903 | TEA7650 pin 30 = +5VC | +5.13 Vdc |
| 34 7911 | TBC-MD pin 34 = +5VDD | +5.17 Vdc |
| 24 7911 | TBC-MD pin 24 = +5VE | +5.1 Vdc |
| 6 7910 | TBC-MA pin 6 = +5VH | +4.8 Vdc |
| 19 7925 | CXA1145 pin 19 = +5VH | +4.91 Vdc |
| 20 7910 | TBC-MA pin 20 = +5VN | +5.13 Vdc |
| 1 7501 | 12V regulator input | +13 Vdc |
| 3 7501 | 12V regulator output | +12 Vdc |
| 1 7922 | RGB decoder supply | +11.5 Vdc |
| 8 7913 | MC1458 - loopfilter | +12.4 Vdc |
| 4 7913 | MC1458 - loopfilter | -12.0 Vdc |
| 1 7902 | Drop out CCD | +9.1 Vdc |
| 2 1900 | TFU VCO/2 = ELCO 2805/+ | +9.25 Vdc |
| 7 1900 | TFU VCO/7 = ELCO 2806/- | -9.25 Vdc |
| 10 7904 | Video CCD pin 10 | +5.00 Vdc |
| 13 7904 | Video CCD pin 13 | +4.80 Vdc |
| D6401/cathode | Video CCD | +5.6 Vdc |
| D6402/anode | Video CCD | -3.6 Vdc |
| 1 7904 | Video CCD pin 1 | -3.0 Vdc |
| 7 7904 | Video CCD pin 7/Vref | +1.00 Vdc |
| 14 7925 | CXA1145 - Vref pin 14 | +2.00 Vdc |
| C2601/+ | Vref - sync.sep. | +2.14 Vdc |
| **HUE INPUT:** | | |
| 24 7922 | RGB decoder in PAL-mode | 9,4 Vdc |
| 24 7922 | RGB decoder in NTSC-mode | 7,5 Vdc |
| **VIDEO MUTE:** | | |
| C-7306 | Video (when INTVID is low, mute) | 3,4 Vdc |
| C-7682 | Video (mute) | 1,46 Vdc |
| **RGB DECODER** | | |
| 14 7920 | Luminance to RGB decoder in PAL-mode | 2,2 Vdc |
| 14 7920 | Luminance to RGB decoder NTSC-mode. | 2,37 Vdc |

### 3. AC voltages and signals measured with the scope

#### 3.1 – HF-AV input measure point connect 2V11.

CAV disc - inside 400 mV pp
CAV disc - outside 800 mV pp.

#### 3.2 MTF circuit

- Disconnect V11
- Apply a HF generator signal to 2V11 and GND to 3V11
- Switch the player on
- Connect 5V13 to ground (PAL-mode)
- Connect +3 volt to 6-7903
- Measure on 14 7903
- Set the HF-generator to 8 MHz/400 mV
- Adjust 5305 for max. amplitude
- Disconnect 5V13 from ground (NTSC-modè)
- Set the HF-generator to 10 MHz/400 mV
- Adjust 5303 for max. amplitude.

### 4. Drop out circuit

#### 4.1 Input CCD filter

- Power off
- Inject via a capacitor of 220 nF in serial with a resistor of 3k3 a frequency of 4,433618 MHz at 3315 and 3317
- Measure on junction 3315 and 3317
- Adjust 5302 for minimum amplitude.

#### 4.2 Drop out amplitude

- Search for drop-out on the PAL test disc
- Adjust 3338 for the drop-out amplitude has the same value as normal video
- Check on T.V. screen.

### 5. Synchronization signals (sync) and special burst separation

#### 5.1 Chroma separator

- Use the scope with a 10:1 probe
- Measure via a 10 k resistor on 10-7910
- Adjust 5309 for max. amplitude.

### 6. Time base control

#### 6.1 CCD pre filter 5307

- Player off
- Inject via a 220 nF capacitor a HF signal 15,5 MHz/1 Vpp on 29-7903
- Measure via a 10 K resistor on 5-7904 adjust 5307 for minimum frequency.

### 7. Noise filter

#### 7.1 Adjusting noise filter 5380

- Player off
- Inject via a serial circuit of a capacitor of 220 nF and a 1K resistor to junction 3389 and 5380 a HF signal of 4,43 MHz
- Measure on 35-7903
- Adjust 5380 for minimum amplitude.

### 8. Oscillators

#### 8.1. TBC MD

- Connect 5V13 to ground (PAL-mode)
- Connect 9V16 to ground (master-mode)
- Measure via a 10:1 probe on 40-7911 with a frequency counter
- Adjust 2708 for a frequency of 7.500.000 Hz ± 5 Hz
- Connect 5V13 to +5V (NTSC-mode)
- Measure via a 10:1 probe on 40-7911 with a frequency counter
- Adjust 2705 for a frequency of 7.159.000 Hz ± 5 Hz.

### 8.2. PAL-encoder
- Connect 10V16 to +5V (Q-PAL = Pal-mode)
- Measure via a 10:1 probe with a frequency counter on 8-7924
- Adjust 2675 for a frequency of 4.433.618 Hz ± 3 Hz.

## 9. Luminance/chrominance separators

### 9.1. PAL filter
- Connect 5V13 to ground and INTVID (8V16) to ground (=mute)
- Connect the cathode of 6551 to ground
- Measure on 8-7922, the luminance input of the RGB decoder
- Adjust 5532 for minimum chrominance signal
- Measure on 4-7922, the chrominance input of the RGB decoder
- Adjust 5533 for maximum chrominance signal
- Search for a CROSS-HATCH signal on the PAL test disc and measure on 8-7922 again
- Adjust 5531 for an equal amplitude of the under and over shoots.

### 9.2. NTSC-Comb filter
- Connect 5V13 to +5V (NTSC-mode)
- Inject a HF signal of 3,579545 MHz/1,5V pp to C-7306
- Measure on e-7513 (lum-out)
- Adjust 3518 to minimum amplitude
- Adjust 5514 to minimum amplitude
- Repeat adjustments 3518 and 5514 until a minimum is reached
- Disconnect HF-generator
- Inject via a capacitor of 1 µF a frequency of 3,25 MHz info e-7513
- Measure on 8-7922
- Adjust 5515 for a minim amplitude
- Disconnect HF-generator
- Inject via a capacitor of 1 µF a frequency of 3,57954 MHz into e-7512
- Measure on 4-7922
- Adjust 5516 for maximum amplitude.

## 10. RGB-decoder (PAL)

### 10.1 RGB filters
- Player off
- Inject via a resistor of 750 Ω on junction 3615 and 2615 a frequency of 7,78 MHz
- Measure on 3614
- Adjust 5614 for minimum amplitude
- Repeat this procedure for : junction 3620 and 2617 measure on 3611 and adjust 5611, junction 3609 and 2606 a measure on 3608 and adjust 5601.

### 10.2 Brightness 3542
- Use the PAL-video test disc, search for picture number 505 (black picture)
- Measure on B-out connect 5V15
- Adjust 3542 for a black level of 2-5 mVp relative to black level during CVBS sync.

### 10.3 Contrast 3545
- Use the PAL-video test disc, search for picture number 405
- Measure on B-out connector 5V15
- Adjust 3545 for an amplitude of 700 mVp relative to blanking level.

### 10.4 Minimum chroma on white colour 3611 and 3608
- Use the PAL-video test disc, search for picture number 405
- Measure on G-out on connector 4V15 and R-out on connector 3V15
- Adjust 3611 and 3608 for the same amplitude as for B-out.

### 10.5 8,86 MHz oscillator
- Use the PAL-video test disc search for picture number 10.000 (red picture)
- Play mode reverse
- Adjust 2584 until no colour disturbance is visible in the upper part of the TV-screen.

### 10.6 PAL demodulator 3626
- Use the PAL-video test disc search for picture number 1690 (DEM-pattern)
- Measure on B-out connector 5V15.
  Scope : time base 10 µsec.div. trigger on TVL on CVBS out
- Adjust 3626 for minimum amplitude jitter in the last two levels of the scope-picture.

### 10.7 PAL delay line 5623/5621
- Use the Pal video test disc search for picture number 250 (colour bar)
- Measure on B-out connector 5V15
- Adjust 5623 and/or 5621 for minimum amplitude jitter.

### 10.8 Saturation 3551
- Use Pal video test disc search for a colour bar
- Measure on B-out connector 5V15
- Adjust 3551 for equal amplitudes of the signals of the colours yellow, cyan and green.

## 11. RGB decoder (NTSC)

### 11.1 NTSC comb. filter
- Use the NTSC-video test disc search for a colour bar
- Measure on B-out connector 5V15
- Adjust 2581 for minimum jitter in the cyan and blue colour signals
- Check the TV screen for a stable picture
- Adjust 3580 (HUE) for the right colour
- Adjust 3518 for minimum amplitude jitter
- Adjust 5514 and/or 5511 for minimum jitter
- Repeat adjustment 3518.

### 11.2 NTSC decoder 2581
- Play a NTSC colour bar reverse
- Adjust 2581 for minimum colour disturbances in the upper part of the TV screen.

Name: VII  Coming from: Sigma pi panel connector 13

| Pin number | Name | IN/OUT | Level | Comment |
|---|---|---|---|---|
| 1 | N.C. | IN | +5V | Negative pulses from 70-200 $\mu$s in siuation off track in Still-mode **not used in the VP380.** |
| 2 | HF-AV | IN | 800-1100 $mV_{pp}$ on 5.5Vdc | |
| 3 | GND | IN | | |

Name: V12  Coming from: Power supply connector p4

| Pin number | Name | IN/OUT | Level | Comment |
|---|---|---|---|---|
| 1 | GND | IN | | |
| 2 | -13Vdc | IN | Ripple 150 $mV_{pp}$ | During Play CAV |
| 3 | GND | IN | | |
| 4 | +13Vdc | IN | Ripple 150 $mV_{pp}$ | During Play CAV |

Name: V13  Coming from: Servo panel connector S9

| Pin number | Name | IN/OUT | Level | Comment |
|---|---|---|---|---|
| 1 | GND | IN | | |
| 2 | DRQ | IN | +5V | Pulse during video line.<br>16-20 and 329-333.<br>Source: BC 848b open collector with a 4k7 pull-up resistor. |
| 3 | DATA | OUT | +5V | Data pulses during DRQ.<br>Load = input for the 24-bit decoder 21-7202. |
| 4 | RADSRVN | IN | +5V | During: out of radial tracking with Jump or Stop.<br>Source: 31-7201 I/O Expander. |
| 5 | NTSC | IN | +5V | With NTSC disc.<br>Source: I/O gate of the 24-bit decoder 20-7202. |
| 6 | TPI | IN | +5V | Low during off track.<br>Source: LM393 7-7300 via resistor 4k7 and diode and 4k7 pull-up resistor. |

Name: V14  Coming from: Motor panel connector M4

| Pin number | Name | IN/OUT | Level | Comment |
|---|---|---|---|---|
| 1 | PHLOCK | IN | +5V | During phase lock.<br>Source: 49-7001-4A via serie resistor 3404 (470Ω) and capacitor 2404 (100pF) to ground. |
| 2 | GND | OUT | | |
| 3 | CS1 | OUT | +5V | During sync. for time base correction.<br>Load: capacitor 2200 (100pF) to ground and via a serie resistor 3106 (470Ω) to 53-7001. |
| 4 | HREF | OUT | +5V | During reference-pulse.<br>In mid-position of active video line (CVBS-out).<br>Load: capacitor 2408 (100pF) to ground and via serie resistor 3405 (470Ω) to 52-7001. |

Name: V15 Coming from: Connector panel connector CN5

| Pin number | Name | IN/OUT | Level | Comment |
|---|---|---|---|---|
| 1 | CVBS | OUT | $2V_{pp}$ | On 2Vdc.<br>Load: approx. 2k2Ω after capacitor 2003 (47 µF). |
| 2 | GND | OUT | | |
| 3 | R0 | OUT | $700mV_{pp}$ | Load: 75Ω when monitor is connected via scart connector. |
| 4 | G0 | OUT | $700mV_{pp}$ | Load: 75Ω when monitor is connected via scart connector. |
| 5 | B0 | OUT | $700mV_{pp}$ | Load: 75Ω when monitor is connected via scart connector. |
| 6 | GND | OUT | | |

Name: V16 Coming from: µprocessor panel connector U15

| Pin number | Name | IN/OUT | Level | Comment |
|---|---|---|---|---|
| 1 | VBLANK | IN | +5V | During vertical blanking.<br>Active: during video line 58-73.<br>Source: character generator 14-7106. |
| 2 | GND | IN | | |
| 3 | Ri | IN | +5V | During white characters.<br>Source: character generator 11-7106. |
| 4 | Gi | IN | +5V | During white characters.<br>Source: character generator 12-7106. |
| 5 | Bi | IN | +5V | During white characters.<br>Source: character generator 13-7106. |
| 6 | HOR | OUT | +5V | Between horizontal sync. pulses.<br>Load: character generator 17-7106. |
| 7 | VER | OUT | +5V | Between vertical sync. pulses.<br>Load: character generator 16-7106 and 13-7101. |
| 8 | INTVID | IN | +5V | When no video mute is needed.<br>Source: DUART 13-7105. |
| 9 | SLV/MAS | IN | +5V | In slave mode when PLOCK is LOW.<br>Source: Duart 28-7105. |
| 10 | QPAL | IN | +5V | During CVBS out with PAL chrominance.<br>Source: Duart 12-7105. |

Name: V17 Coming from: Analog Audio panel connector B2

| Pin number | Name | IN/OUT | Level | Comment |
|---|---|---|---|---|
| 1 | NTSC-A | OUT | +5V | With NTSC Disc.<br>Source: collector BC 858b with 1kΩ resistor to ground. |
| 2 | HF-audio | OUT | $60mV_{pp}$ | Load: HF audio level (when HF-AV = $800mV_{pp}$).<br>DC level = 2Vdc via 68Ω resistor.<br>Load: 47Ω resistor and 470pF capacitor to ground after 22nF capacitor. |
| 3 | GND | OUT | | |
| 4 | TBC-ERR | OUT | $800mV_{pp}$ | DC level = 0V.<br>Source: via 3811 (1k) from 7-7913 (opamp).<br>Load: resistor of 15kΩ via capacitor of 22nF. |

Name: V18 Coming from: Y/C connector

| Pin number | Name | IN/OUT | Level | Comment |
|---|---|---|---|---|
| 1 | C | OUT | 300mV$_{pp}$ | Burst, when Y/C connector is terminated with 75Ω.<br>Source: e-7652 via 3648 (68Ω). |
| 2 | GND | OUT | | |
| 3 | GND | OUT | | |
| 4 | Y | OUT | 1V$_{pp}$ | Luminance, when Y/C connector is terminated with 75Ω .<br>Source: e-7659 via 3657 (68Ω). |

Name: V19 Coming from: front panel (LED's) connector K54.

| Pin number | Name | IN/OUT | Level | Comment |
|---|---|---|---|---|
| 1 | 5VL | OUT | +5Vdc | Supply via 3505 (4,7Ω.) non flamable resistor.<br>Load: 2×led via 330Ω resistor. |
| 2 | GND | OUT | | |
| 3 | NTSC-A | OUT | +5Vdc | With NTSC-disc.<br>Source: +5VA via 7319 (BC858b) and 3305 (1k) to ground.<br>Load: resistor of 33k. |

# VIDEO_VP380 PART I

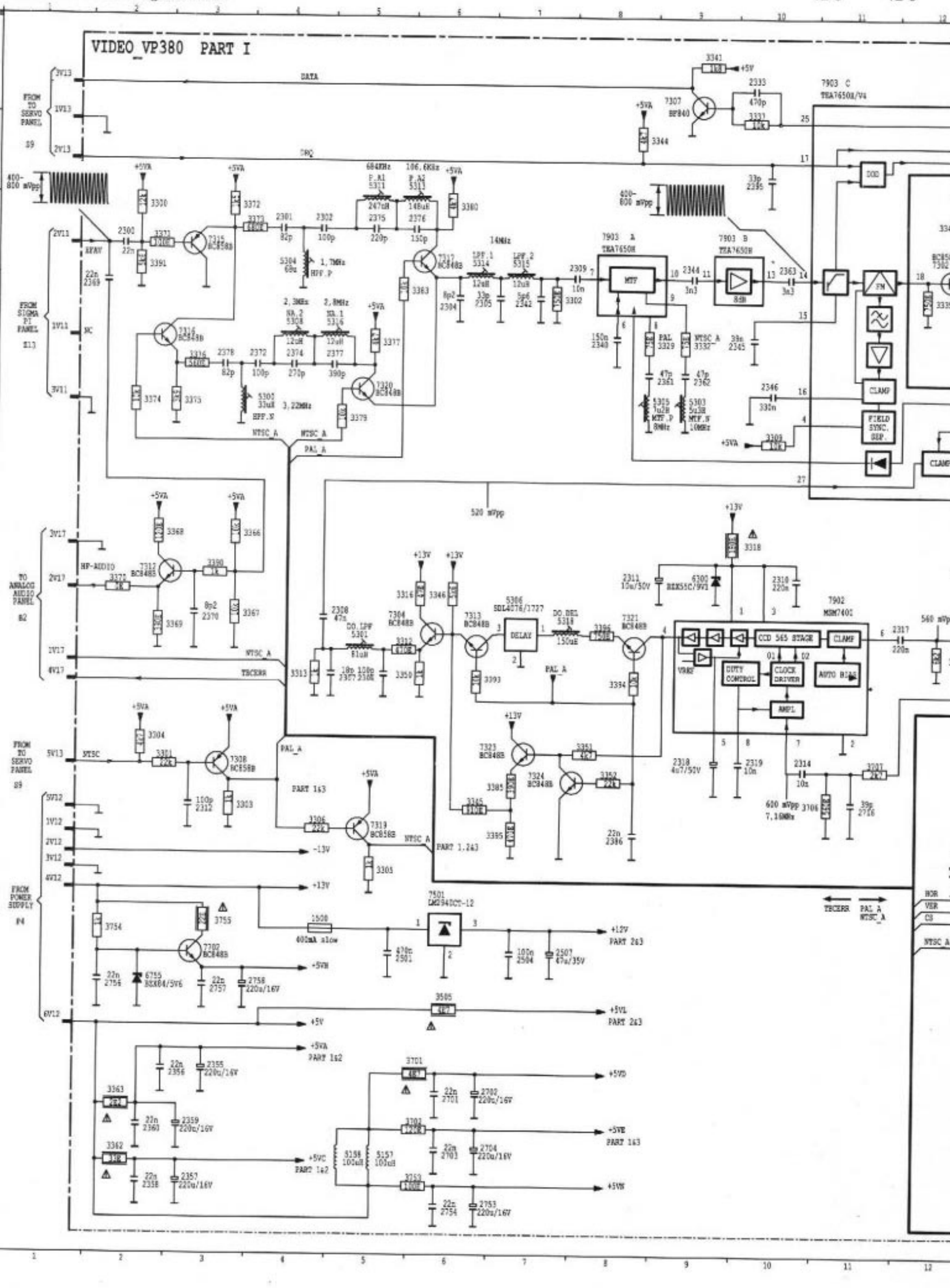

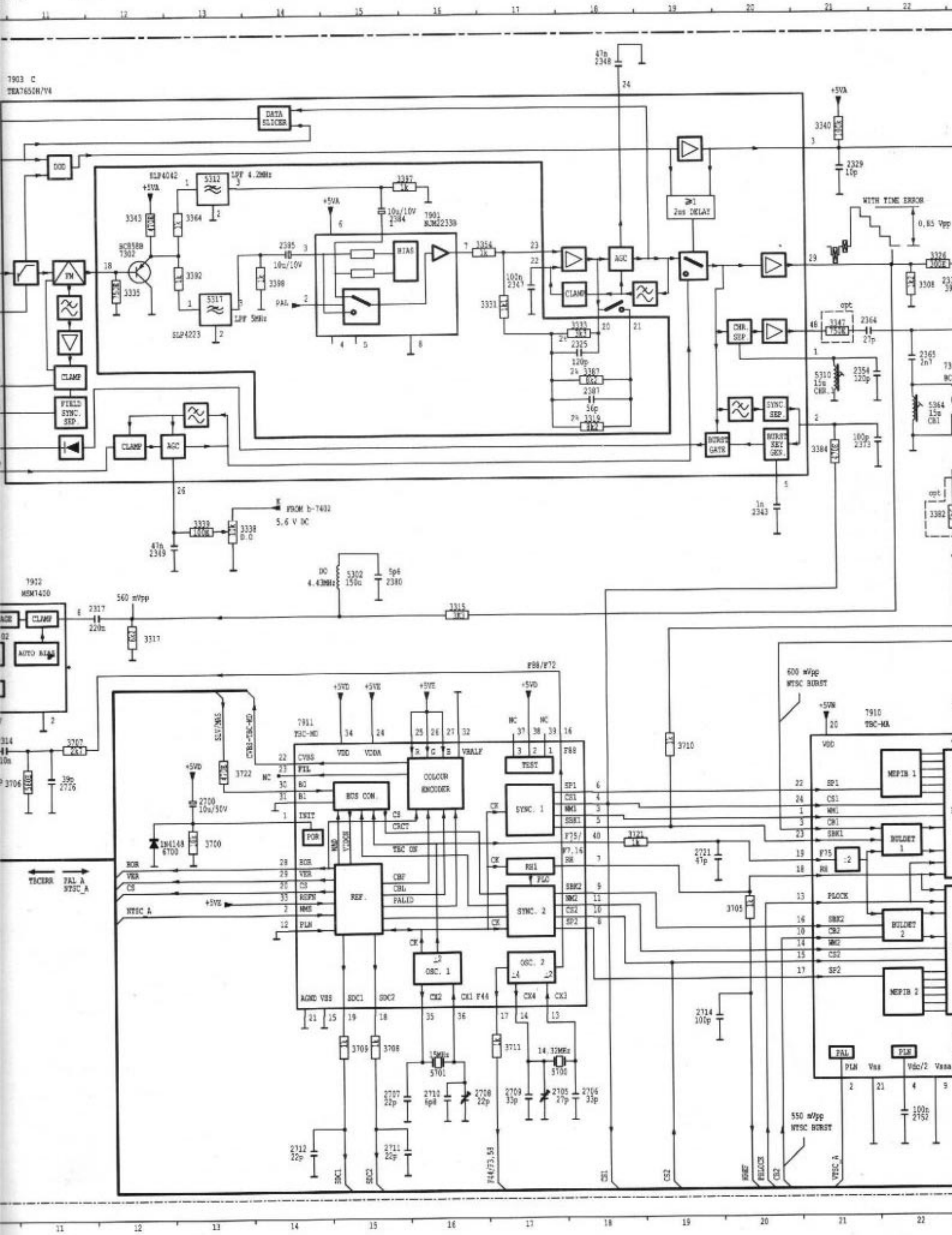
7903 C
TDA7650H/V4
DATA SLICER
DOD
SLP4042
+5VA
5312
LPF 4.2MHz
3343
3364
3392
3335
SC8588
T902
5317
LPF 5MHz
SLP4223
3397
10u/10V
2384
7901
SLM2330
2385
10u/10V
3398
PAL
BIAS
3354
23
22
103n
2347
3331
AGC
CLAMP
+5VA
3340
2329
10p
WITH TIME ERROR
0,85 Vpp
3326
100R
3308
opt
3347
150R
2364
27p
CHR. SEP.
5310
15u
CHR.
2354
220p
2365
2n7
5364
15u
CBI
SYNC SEP.
BURST GATE
BURST KEY GEN.
3384
100p
2373
1n
2343
IN
FROM b-7402
5.6 V DC
3339
100R
3338
0.0
47n
2349
DC
5302
150u
5pF
2380
7902
MSM1400
CLAMP
AUTO BIAS
560 mVpp
2317
220n
3317
3315
3207
2K2
3706
2716
39p
2700
10u/50V
3700
1N4148
6700
TECERR
PAL A
NTSC_A
F88/F72
7911
YSC-MD
+5VD
+5VE
VDD
VDDA
CVBS
FIL
BO
B1
INIT
NC
3722
47R
SYNC/AIS
CVBS-YSC-MD
COLOUR ENCODER
BUS CON.
POR
TEST
SYNC. 1
RS1
SYNC. 2
REF.
OSC. 1
OSC. 2
PLO
CBF
CBL
FALID
CSCT
YSC OE
SP1
CS1
NM1
SBK1
F75/
F7,14
SBK2
NM2
CS2
SP2
AGND VSS
SDC1
SDC2
CX2
CX1 F44
CX4
CX3
F44/73,53
3709
3708
3711
15MHz
5701
14,32MHz
5700
2707
22p
2710
6p8
2708
22p
2709
33p
2705
27p
2706
33p
2712
22p
2711
22p
3710
3705
2721
47p
2714
100p
600 mVpp
NTSC BURST
7910
YSC-MA
VDD
MEMIB 1
BUILDET 1
:2
PLOCK
BUILDET 2
MEMIB 2
PAL
PLN
Vss
Vdc/2
Vssa
100n
2152
550 mVpp
NTSC BURST
NTSC_A

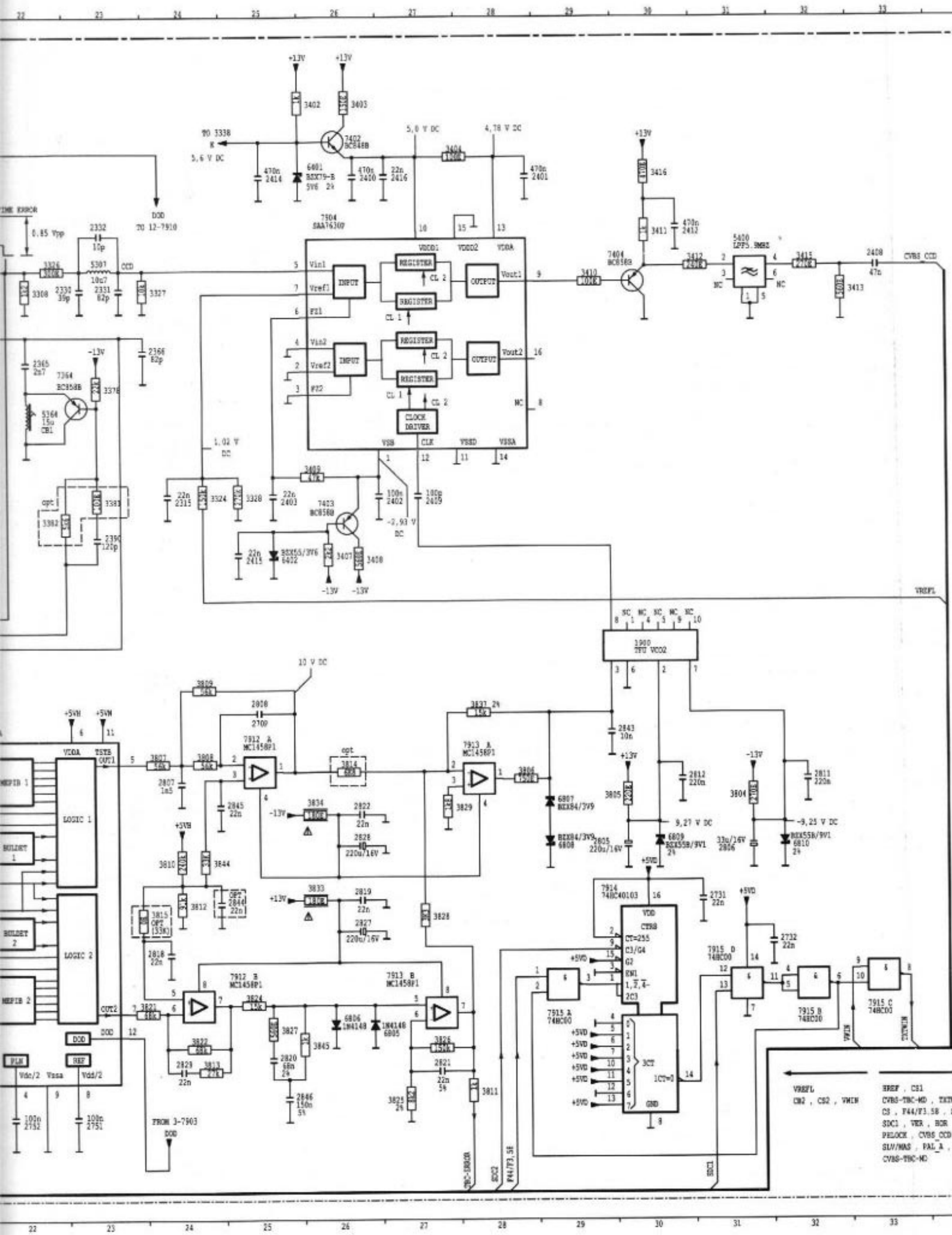
+13V
3402
3403
7402 BC848B
5,0 V DC
4,78 V DC
5,6 V DC
470n 2414
6601 BZX79-B 5V6
470n 2400
22n 2416
470n 2401
7504 SAA7630P
VDDD1
VDDD2
VDDA
INPUT
REGISTER
OUTPUT
CL 1
CL 2
Vin1
Vref1
Fil
Vout1
Vin2
Vref2
Fil2
Vout2
CLOCK DRIVER
VSSD
VSSA
CLK
NC
1,02 V DC
-2,93 V DC
7403 BC858B
3416
3411
470n 2412
5400 LPF5.5MHz
7404 BC858B
3410
3412
3415
2408
47n
CVBS CCD
3413
2332 10p
5307 10u7
2331 82p
2332 39p
3326
3308
3327
CCD
2365 2n7
2366 82p
7364 BC858B
3378
5364 15u CB1
opt
3382
3381
2390 120p
3409
22n 2315
3324
3328
22n 2403
100n 2402
100p 2409
22n 2413
BZX55/3V6 6402
3407
3408
-13V
DOD
TO 12-7910
FROM 3-7903
VREFL
1900 TFU VCO2
10 V DC
3809
2709
2808
7912 A MC1458P1
7913 A MC1458P1
7912 B MC1458P1
7913 B MC1458P1
3827 56k
3808 56k
3814 opt
2807 1n5
2845 22n
3834
2822 22n
2828 220u/16V
3833
2819 22n
2827 220u/16V
3837 2k
3806 150R
3829
2843 10n
6807 BZX84/3V9
6808 BZX84/3V9
3805 220R
3804 220R
2812 220n
2811 220n
2825 220u/16V
6809 BZX55B/9V1
33u/16V 2806
6810 BZX55B/9V1
9,27 V DC
-9,25 V DC
3810 240R
3844 3k3
3812 3k3
3815 opt (33k)
2844 opt 22n
2818 22n
3828 1k
3824 10k
3822 68k
2829 22n
3813 27k
3821 68k
6806 1N4148
6805 1N4148
2820 68n 2%
3845 1k
2846 150n 5%
3825 2%
3826 15k
2821 22n 5%
3811 1k
7914 74HC40103
2731 22n
2732 22n
7915 D 74HC00
7915 A 74HC00
7915 B 74HC00
7915 C 74HC00
3CT
1CT=0
GND
VMIN
2365 2n7
2366 82p
2752 100n
2751 100n
LOGIC 1
LOGIC 2
BUILDIT 1
BUILDIT 2
MEPIB 1
MEPIB 2
VDDA
TSTB OUT1
OUT2
PLN
REF
Vdc/2
Vssa
Vdd/2
+5VD
+5VN
VREFL
CS2 , CS2 , VMIN
HREF , CS1
CVBS-TBC-MD , TXT
CS , F44/F3.5B ,
SDC1 , VER , HOR
PELOCK , CVBS_CCD
SLV/MAS , PAL_A ,
CVBS-TBC-MD
TBC-SDA1B
SDC2
F44/F3.5E
SDC1

## Video part II

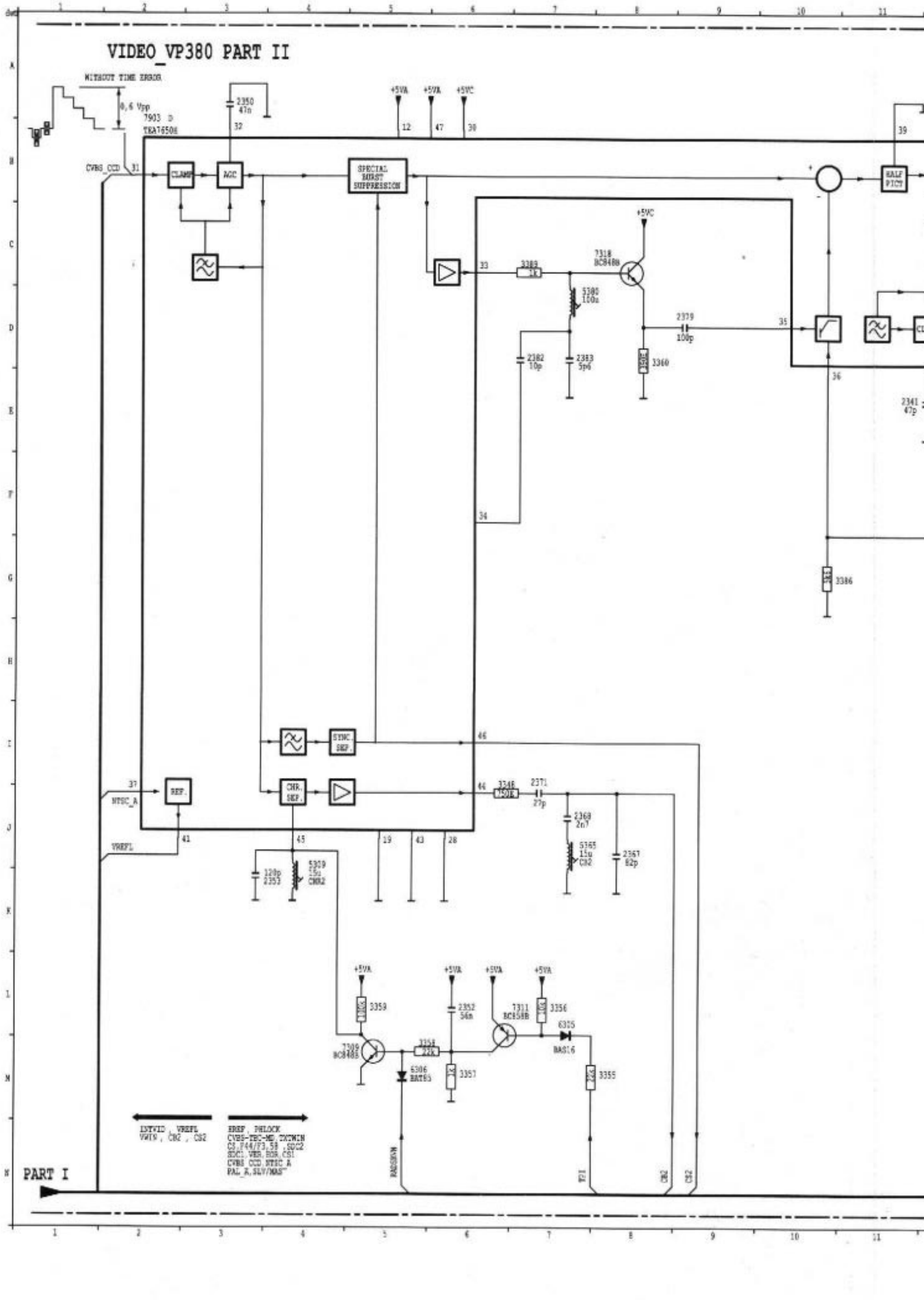

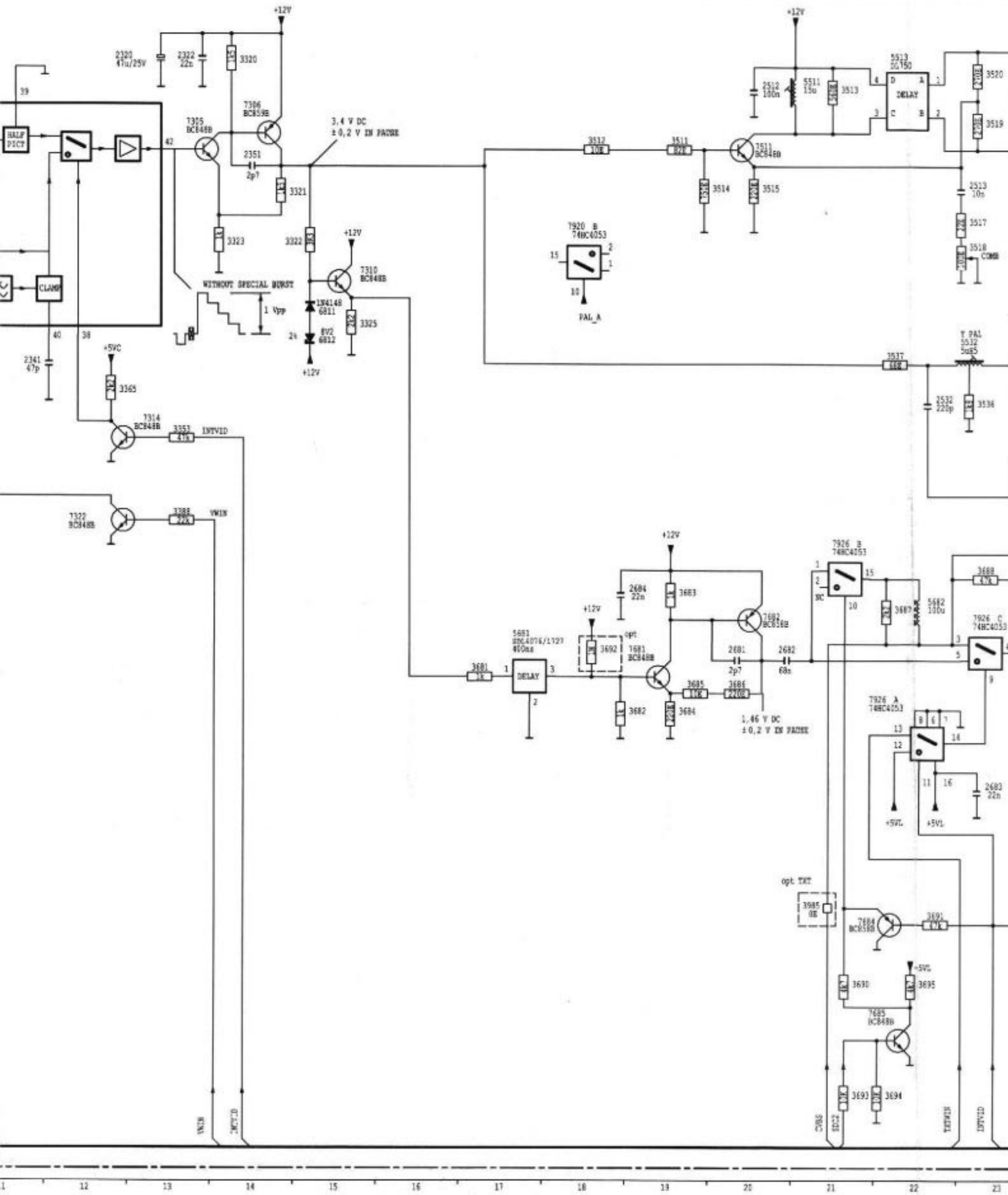
HALF PICT
CLAMP
WITHOUT SPECIAL BURST
1 Vpp
3,4 V DC
± 0,2 V IN PAUSE
1,46 V DC
± 0,2 V IN PAUSE
DELAY
7920 B
74HC4053
PAL_A
7926 B
74HC4053
7926 C
74HC4053
7926 A
74HC4053
opt TXT
INTVID
VWIN
COMB
+12V
+5VC
+5VL

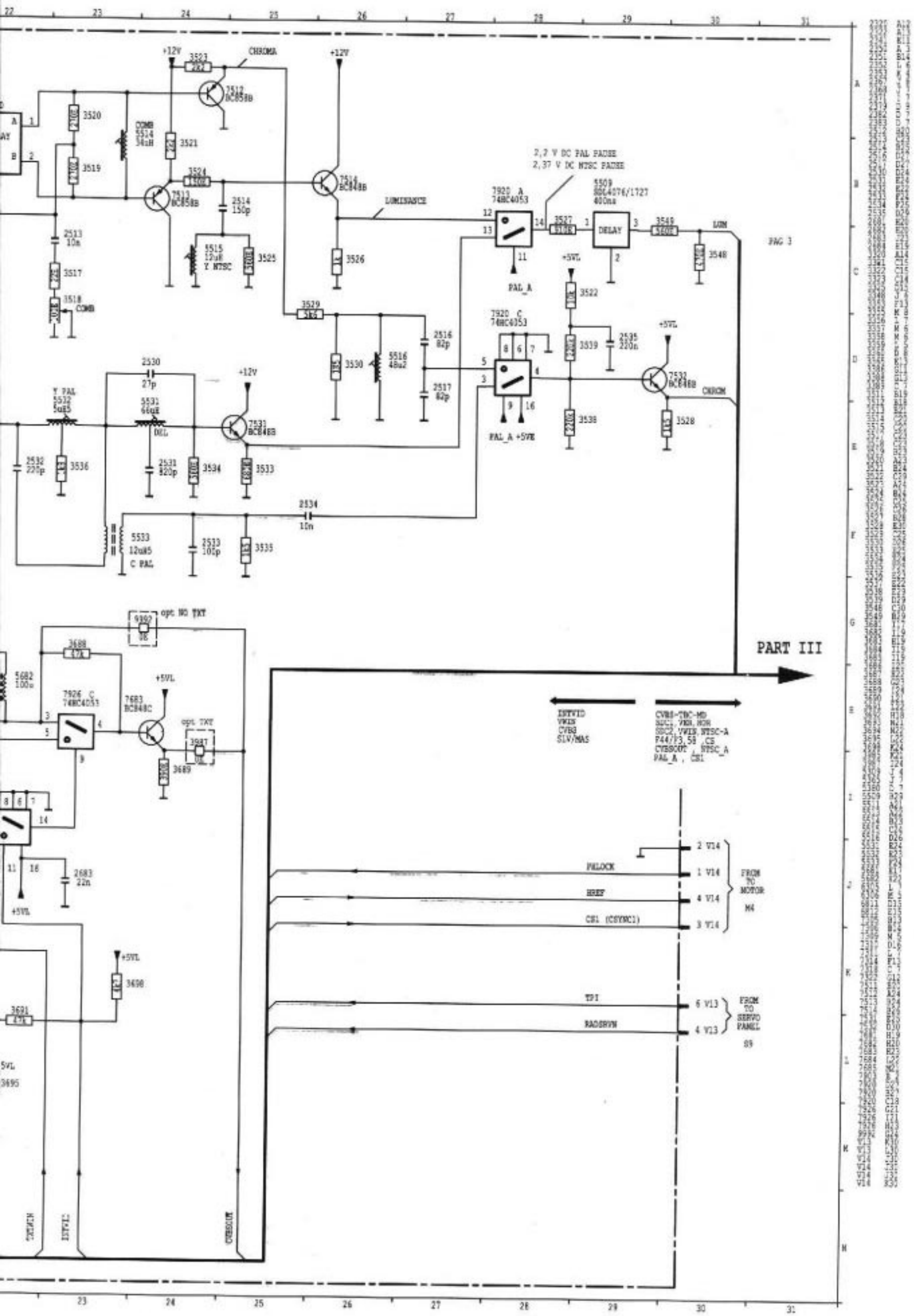
CHROMA
LUMINANCE
2,2 V DC PAL PAUSE
2,37 V DC NTSC PAUSE
7920 A
74HC4053
5509
SDL4076/1727
400ns
DELAY
LUM
PAG 3
PAL_A
7920 C
74HC4053
PAL_A +5VE
CHROM
Y PAL
5532
5uE5
5531
66uE
DEL
5533
12uE5
C PAL
opt NO TXT
opt TXT
7926 C
74HC4053
7683
BC848C
PART III
INTVID
VWIN
CVBS
SLV/MAS
CVBS-TBC-MD
SDC1, VWIN, NOR
SDC2, VWIN, NTSC-A
F44/F3,58 ,CS
CVBSOUT , NTSC_A
PAL_A , CS1
PALOCK
HREF
CS1 (CSYNC1)
FROM TO MOTOR
M4
TPI
RADSRVN
FROM TO SERVO PANEL
S9
INTWIN
INTVID
CVBSOUT

# VIDEO_VP380 PART III

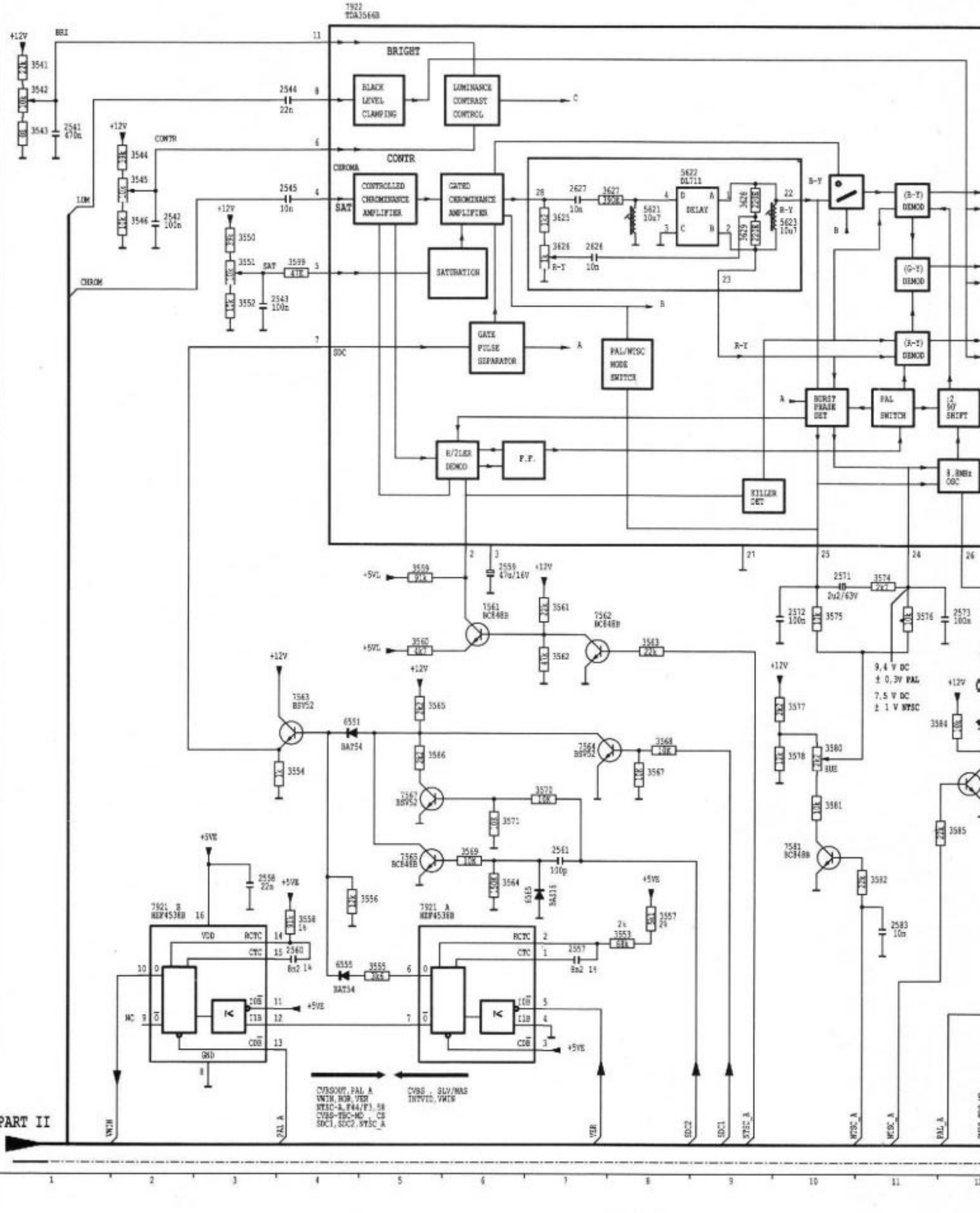

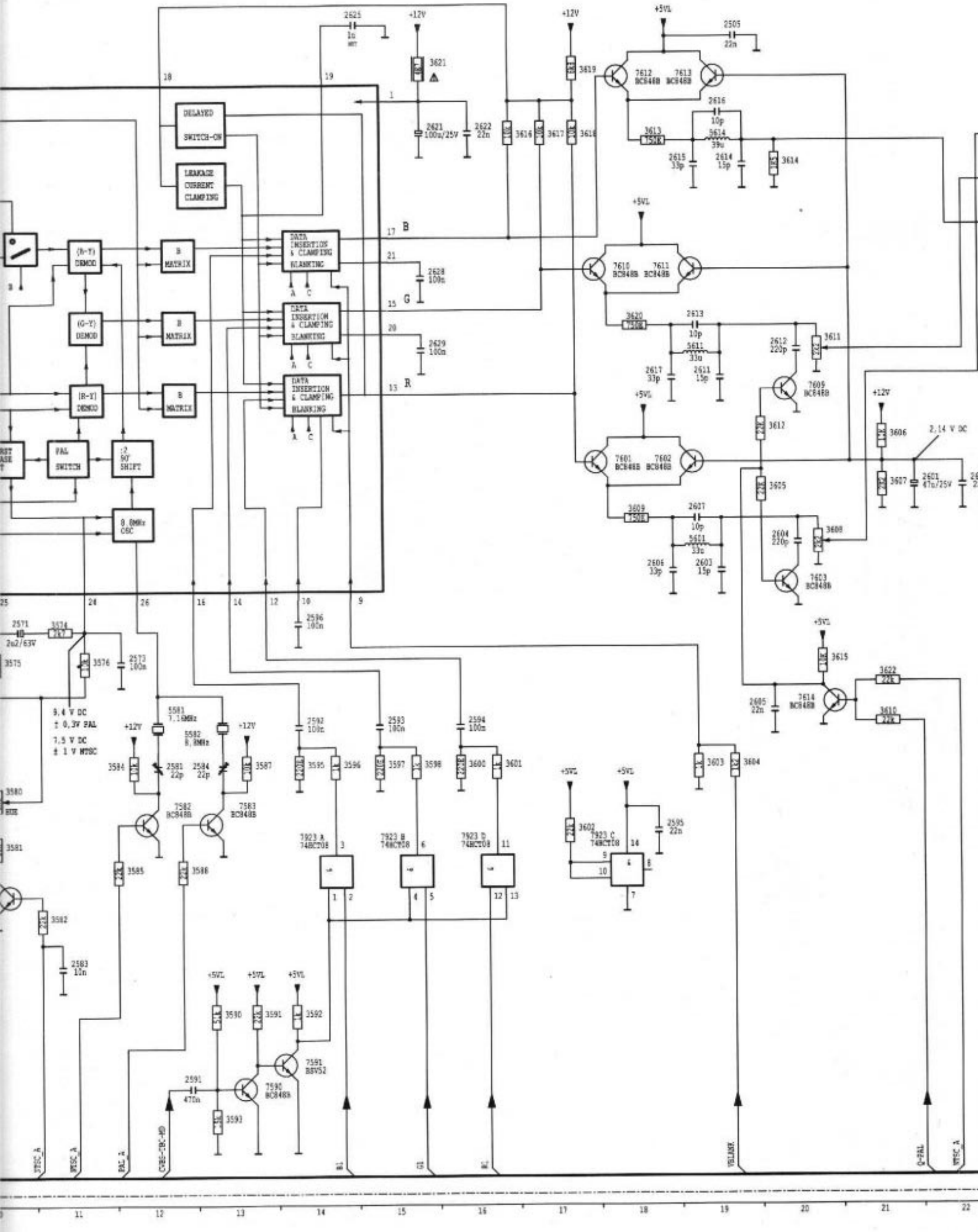
DELAYED SWITCH-ON
LEAKAGE CURRENT CLAMPING
(R-Y) DEMOD
(G-Y) DEMOD
(B-Y) DEMOD
B MATRIX
DATA INSERTION & CLAMPING BLANKING
PAL SWITCH
:2 90° SHIFT
8.8MHz OSC
9.4 V DC
± 0.3V PAL
7.5 V DC
± 1 V NTSC
2.14 V DC
7612 BC848B
7613 BC848B
7610 BC848B
7611 BC848B
7601 BC848B
7602 BC848B
7609 BC848B
7603 BC848B
7614 BC848B
7582 BC848B
7583 BC848B
7590 BC848B
7591 BSV52
7923 A 74HCT08
7923 B 74HCT08
7923 C 74HCT08
7923 D 74HCT08
+12V
+5VL
B
G
R

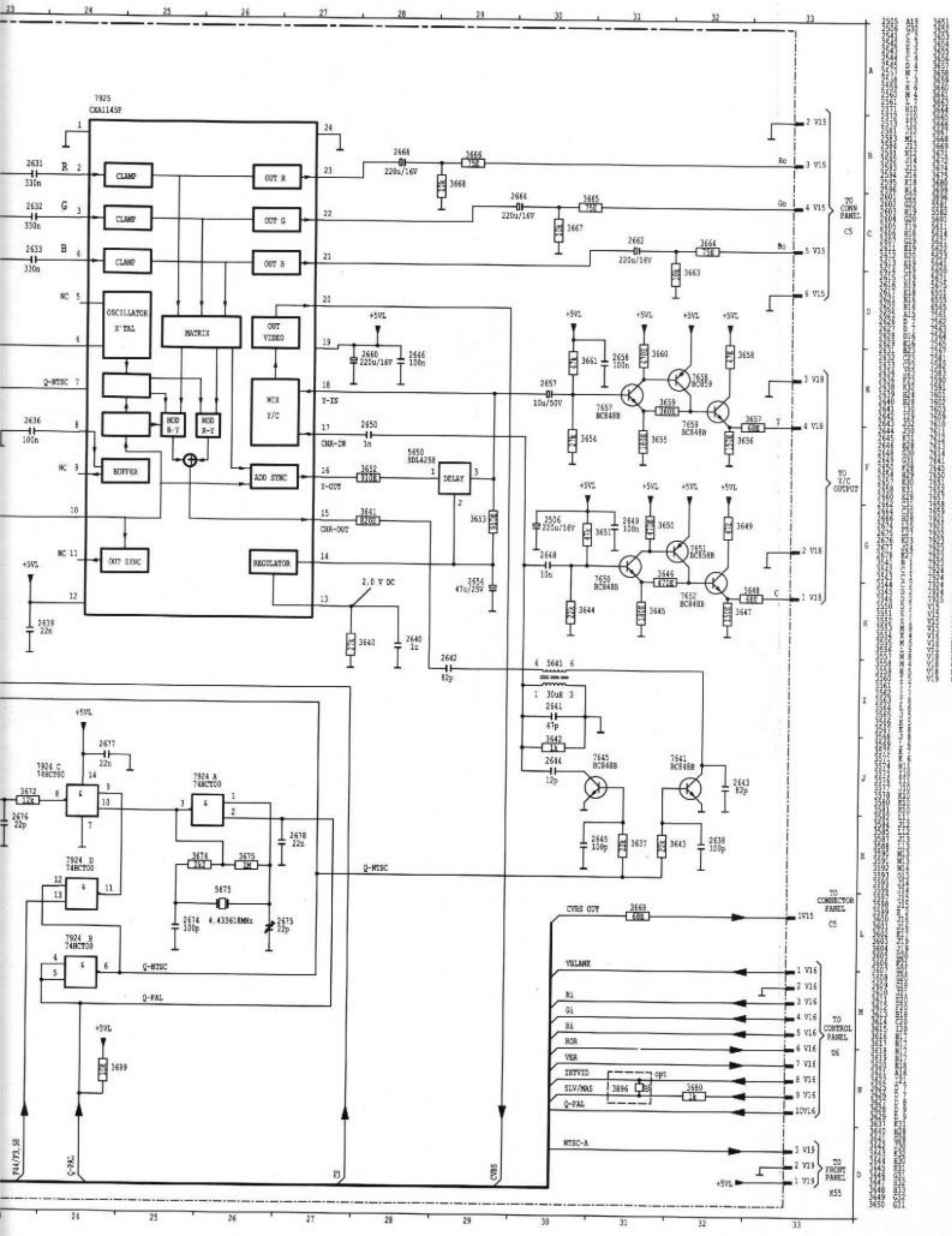
7925
CXA1145P
CLAMP
CLAMP
CLAMP
OUT R
OUT G
OUT B
OSCILLATOR
X'TAL
MATRIX
OUT
VIDEO
MIX
Y/C
MOD
B-Y
MOD
B-Y
BUFFER
ADD SYNC
OUT SYNC
REGULATOR
DELAY
BD14258
Q-NTSC
Y-IN
CHR-IN
Y-OUT
CHR-OUT
2.0 V DC
+5VL
2631 330n
2632 330n
2633 330n
2636 100n
2639 22n
2666 220u/16V
2664 220u/16V
2662 220u/16V
2660 220u/16V
2646 100n
2650 1n
2652
2641
2653
2654 47u/25V
2657 10u/50V
2656 220u/16V
2649 100n
2640 10n
2642 82p
2643 82p
2645 100p
2638 100p
2677 22n
2676 22p
2678 22n
2674 100p
2675 22p
5675 4.433618MHz
2639 22n
2640 1n
3672 12k
3674 2k2
3675 1M
3699 10K
3643 22K
3644 22K
3645 10K
3646 47KR
3647 68R
3648 68R
3649 1K
3650
3651 1K
3652 10K
3653 10K
3654 22K
3655 10K
3656 15KR
3657 68R
3658 1K
3659 100R
3660 470R
3661 1K
3663 10K
3664 75R
3665 75R
3666 75R
3667 10K
3668 10K
7924 C
74HCT00
7924 D
74HCT00
7924 A
74HCT00
7924 B
74HCT00
7657
BC848B
7658
BC848B
7650
BC848B
7651
BC858B
7652
BC848B
7645
BC848B
7641
BC848B
5641
30uH
2641 47p
3642 1K
2644 12p
3637 22K
3643 22K
3638 100p
CVBS OUT
3669 68R
VBLANK
R1
G1
B1
HOR
VER
INTVID
SLV/MAS
Q-PAL
3896
opt
3680 1K
NTSC-A
+5VL
1V15
2 V15
3 V15
4 V15
5 V15
6 V15
3 V18
4 V18
2 V18
1 V18
1 V16
2 V16
3 V16
4 V16
5 V16
6 V16
7 V16
8 V16
9 V16
10V16
3 V19
2 V19
1 V19
Ro
Go
Bo
Y
C
TO CONNECTOR PANEL C5
TO Y/C OUTPUT
TO CONTROL PANEL D6
TO FRONT PANEL H55
P44/P3,38
C-PAL
P3
CVBS

## Video panel lay-out clip side

| | | | | | | | | | | | |
|---|---|---|---|---|---|---|---|---|---|---|---|
| 1011 F1 | 1883 E7 | 1934 E6 | 1991 A12 | 2347 C4 | 2400 B1 | 2591 E14 | 2649 C14 | 2805 D7 | 3327 B2 | 3375 F1 |
| 1012 F6 | 1884 C9 | 1935 D6 | 1993 C9 | 2348 C4 | 2401 B2 | 2592 D14 | 2650 C14 | 2805 D7 | 3328 B2 | 3376 E1 |
| 1013 F2 | 1885 E8 | 1936 D7 | 1994 A9 | 2349 D4 | 2402 B2 | 2593 E15 | 2654 C14 | 2806 B3 | 3329 E2 | 3377 E2 |
| 1014 F7 | 1886 D14 | 1937 D5 | 1995 C8 | 2350 D4 | 2403 B2 | 2594 D15 | 2657 C14 | 2807 A5 | 3331 C3 | 3378 F4 |
| 1016 F15 | 1887 F8 | 1939 D7 | 1996 D12 | 2351 E4 | 2408 C5 | 2595 E15 | 2658 C14 | 2808 B4 | 3332 E3 | 3379 E1 |
| 1017 F2 | 1888 F8 | 1940 A3 | 1997 D12 | 2352 F4 | 2409 B2 | 2596 D11 | 2660 B12 | 2811 A2 | 3333 C3 | 3380 D1 |
| 1018 B15 | 1889 F8 | 1941 D6 | 1998 B11 | 2353 E4 | 2412 B3 | 2601 D12 | 2662 A14 | 2812 A2 | 3335 D3 | 3381 F5 |
| 1018 D15 | 1890 B14 | 1942 E7 | 1999 A7 | 2354 E3 | 2414 B1 | 2602 D12 | 2662 B14 | 2818 A5 | 3337 F3 | 3382 F5 |
| 1019 F12 | 1891 D15 | 1943 A1 | 2281 B10 | 2355 D3 | 2415 B1 | 2603 D13 | 2662 B14 | 2819 A3 | 3338 C4 | 3383 D2 |
| 1850 B5 | 1892 E11 | 1944 A8 | 2282 B10 | 2356 D3 | 2416 B2 | 2604 D13 | 2674 B12 | 2820 B4 | 3339 D4 | 3384 F5 |
| 1851 C1 | 1893 E11 | 1945 B8 | 2300 F1 | 2357 D4 | 2501 F9 | 2605 D13 | 2676 B13 | 2821 A3 | 3340 E3 | 3385 D2 |
| 1852 F6 | 1894 E12 | 1946 F7 | 2301 E1 | 2358 D4 | 2504 F10 | 2606 E13 | 2677 C12 | 2822 B4 | 3341 F3 | 3386 D4 |
| 1853 D4 | 1895 E14 | 1948 A7 | 2302 E1 | 2359 F4 | 2505 C13 | 2607 D12 | 2678 C12 | 2827 A3 | 3343 D3 | 3387 D3 |
| 1854 B4 | 1896 E11 | 1950 A7 | 2304 D2 | 2360 E3 | 2506 D15 | 2611 D13 | 2681 A11 | 2828 A3 | 3344 E3 | 3388 D4 |
| 1855 F2 | 1898 C15 | 1952 A8 | 2305 D2 | 2361 E2 | 2507 F9 | 2612 D12 | 2682 A11 | 2829 A4 | 3345 D2 | 3389 C4 |
| 1856 C3 | 1899 D15 | 1959 D7 | 2306 B5 | 2362 E2 | 2512 E10 | 2613 D13 | 2683 A12 | 2843 A2 | 3346 D1 | 3390 F2 |
| 1857 B4 | 1900 F12 | 1960 C5 | 2307 B4 | 2363 D3 | 2513 E10 | 2614 D13 | 2684 A9 | 2844 A5 | 3347 F4 | 3391 F1 |
| 1858 C2 | 1901 D11 | 1964 C11 | 2308 B4 | 2364 F4 | 2514 E10 | 2615 C13 | 2700 C6 | 2845 A5 | 3348 F4 | 3392 D3 |
| 1859 C3 | 1902 E8 | 1966 B12 | 2309 E2 | 2365 F5 | 2516 F7 | 2616 D13 | 2701 B7 | 2846 B4 | 3350 D2 | 3393 D1 |
| 1860 D4 | 1903 F11 | 1967 C12 | 2310 C1 | 2366 F5 | 2517 F7 | 2617 D13 | 2702 B6 | 3300 F1 | 3351 C2 | 3394 D2 |
| 1861 B1 | 1904 D15 | 1968 C12 | 2311 C2 | 2367 F5 | 2530 F6 | 2621 D9 | 2703 B8 | 3301 D2 | 3352 C2 | 3395 D1 |
| 1862 B2 | 1905 L11 | 1969 B10 | 2312 D2 | 2368 F5 | 2531 F6 | 2622 C10 | 2705 C8 | 3302 E2 | 3353 E5 | 3396 C2 |
| 1863 L1 | 1907 D14 | 1971 D9 | 2314 C1 | 2369 F2 | 2532 F6 | 2625 B11 | 2706 C7 | 3303 D2 | 3354 C3 | 3397 C3 |
| 1864 C1 | 1908 F10 | 1972 B9 | 2315 B2 | 2370 E2 | 2533 F7 | 2626 B10 | 2707 B7 | 3304 F2 | 3355 F3 | 3398 C3 |
| 1865 C4 | 1909 F8 | 1973 D9 | 2317 C1 | 2371 F4 | 2534 F7 | 2627 C9 | 2708 A7 | 3305 E1 | 3356 F4 | 3402 B1 |
| 1866 D5 | 1910 F10 | 1974 C10 | 2318 C2 | 2372 E1 | 2535 F9 | 2628 C11 | 2708 B11 | 3306 D1 | 3357 F3 | 3403 B1 |
| 1867 E2 | 1911 E9 | 1975 A9 | 2319 C1 | 2373 E5 | 2541 D11 | 2629 C11 | 2709 C8 | 3308 C3 | 3358 F4 | 3404 B2 |
| 1868 F1 | 1912 E11 | 1976 A9 | 2320 F4 | 2374 E1 | 2542 D10 | 2631 C12 | 2710 B7 | 3309 E3 | 3359 E4 | 3407 C1 |
| 1869 E4 | 1913 E14 | 1977 D8 | 2322 E5 | 2375 E1 | 2543 D10 | 2632 C12 | 2711 B8 | 3312 B4 | 3360 C4 | 3408 C1 |
| 1870 F4 | 1914 F11 | 1978 D8 | 2325 C3 | 2376 D1 | 2544 D9 | 2633 C12 | 2712 B8 | 3313 B5 | 3362 E5 | 3409 B2 |
| 1871 F5 | 1915 E6 | 1979 D7 | 2329 E3 | 2377 E1 | 2545 D9 | 2634 B12 | 2714 C7 | 3315 C2 | 3363 F4 | 3410 B2 |
| 1872 D4 | 1916 F9 | 1980 C12 | 2330 B2 | 2378 E1 | 2557 B8 | 2636 B13 | 2714 D7 | 3316 D1 | 3364 D3 | 3411 B3 |
| 1873 F4 | 1917 E8 | 1981 D6 | 2331 B2 | 2379 C4 | 2558 B9 | 2638 B15 | 2716 C7 | 3317 C2 | 3365 D4 | 3413 C5 |
| 1874 E5 | 1918 E10 | 1982 C6 | 2332 C2 | 2380 C2 | 2559 D9 | 2639 B12 | 2721 B6 | 3318 C1 | 3366 F2 | 3415 C5 |
| 1875 C5 | 1919 E8 | 1983 C5 | 2333 E3 | 2382 C4 | 2560 B9 | 2640 B14 | 2731 A6 | 3319 D3 | 3367 F1 | 3416 B1 |
| 1876 D12 | 1920 E10 | 1984 A8 | 2340 E3 | 2383 C4 | 2561 A8 | 2641 C15 | 2732 A6 | 3320 E5 | 3368 E2 | 3505 F11 |
| 1877 A11 | 1921 B5 | 1985 A8 | 2341 D4 | 2384 C2 | 2571 B11 | 2642 C14 | 2751 D7 | 3321 E5 | 3369 F2 | 3511 E9 |
| 1878 C9 | 1923 D8 | 1986 B8 | 2342 E2 | 2385 C3 | 2572 B10 | 2643 C15 | 2752 C6 | 3322 E5 | 3370 F2 | 3512 E9 |
| 1879 A9 | 1930 D6 | 1987 C6 | 2343 E3 | 2386 C2 | 2573 B11 | 2644 C15 | 2754 C7 | 3323 F4 | 3371 F1 | 3513 E9 |
| 1880 D9 | 1931 B5 | 1988 D8 | 2344 D3 | 2387 D3 | 2581 B10 | 2645 C15 | 2757 D7 | 3324 B3 | 3372 E1 | 3514 E9 |
| 1881 A10 | 1932 D5 | 1989 D12 | 2345 D2 | 2390 F5 | 2583 A9 | 2646 B12 | 2805 B3 | 3325 D5 | 3373 E1 | 3515 E9 |
| 1882 C8 | 1933 D6 | 1990 D8 | 2346 D3 | 2395 F2 | 2584 B10 | 2648 C14 | 2805 B7 | 3326 C2 | 3374 F1 | 3517 E10 |

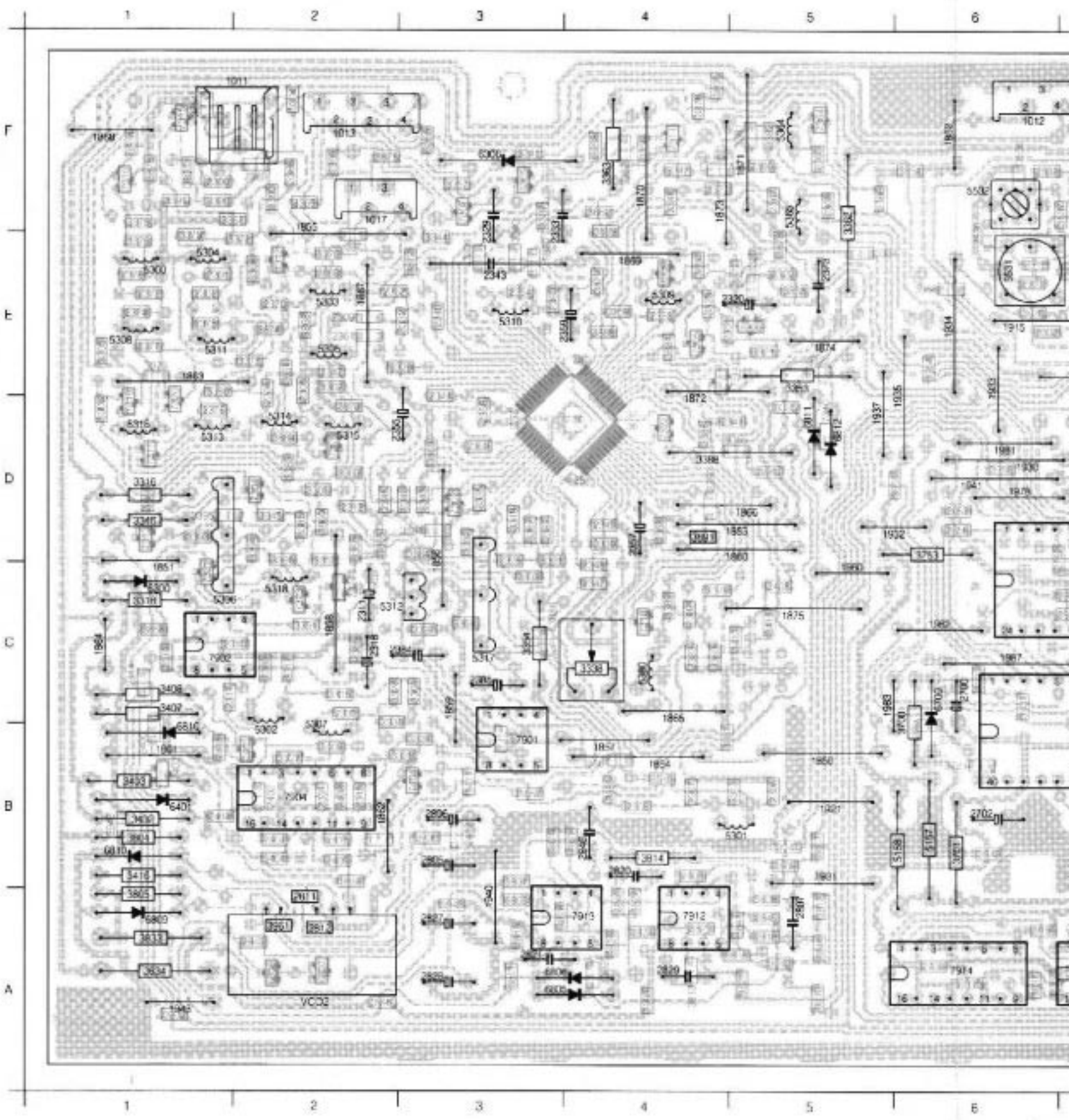

| | | | | | | | | | | | | |
|---|---|---|---|---|---|---|---|---|---|---|---|---|
| 3375 F1 | 3518 E10 | 3564 A8 | 3613 C13 | 3667 B15 | 3807 B5 | 3872 E3 | 3918 F7 | 3974 A12 | 5380 C4 | 7304 D2 | 7591 F15 |
| 3376 F1 | 3519 E10 | 3565 C9 | 3614 D13 | 3668 A15 | 3808 A5 | 3873 D2 | 3919 A6 | 3975 A8 | 5509 E9 | 7305 E4 | 7601 D12 |
| 3377 L2 | 3520 E10 | 3566 B9 | 3615 D13 | 3669 A15 | 3809 B5 | 3874 E2 | 3920 E6 | 3976 D9 | 5511 E10 | 7306 E5 | 7602 E12 |
| 3378 F4 | 3521 E10 | 3567 C9 | 3616 C11 | 3671 B13 | 3810 A5 | 3875 F2 | 3921 E8 | 3978 D10 | 5513 F10 | 7307 F3 | 7603 E13 |
| 3379 L1 | 3522 F9 | 3568 C8 | 3617 C11 | 3672 B13 | 3811 A3 | 3876 F1 | 3922 F10 | 3979 B11 | 5514 E10 | 7308 D2 | 7609 D13 |
| 3380 D1 | 3523 E10 | 3569 B8 | 3618 C11 | 3674 C12 | 3812 A5 | 3877 E5 | 3923 E7 | 3980 B9 | 5515 E10 | 7309 E4 | 7610 C12 |
| 3381 F5 | 3524 E10 | 3570 B9 | 3619 C10 | 3675 C12 | 3813 A4 | 3878 E5 | 3924 C13 | 3981 C13 | 5516 F8 | 7310 D5 | 7611 D12 |
| 3382 F5 | 3525 F11 | 3571 B9 | 3620 D12 | 3680 F15 | 3814 B4 | 3879 E4 | 3930 B3 | 3982 B9 | 5531 E6 | 7311 F4 | 7612 D13 |
| 3383 D2 | 3526 F11 | 3574 B11 | 3621 C9 | 3681 A8 | 3815 A4 | 3880 E4 | 3931 C6 | 3983 B9 | 5532 F6 | 7312 E2 | 7613 C13 |
| 3384 E5 | 3527 F8 | 3575 B11 | 3622 D14 | 3682 A10 | 3821 A5 | 3881 E4 | 3932 C6 | 3984 A11 | 5533 F7 | 7313 D1 | 7614 D13 |
| 3385 D2 | 3528 F9 | 3576 B11 | 3625 B10 | 3683 A10 | 3822 A4 | 3882 B3 | 3933 A1 | 3985 A11 | 5601 D13 | 7314 E5 | 7641 B15 |
| 3386 D4 | 3529 E9 | 3577 A11 | 3626 A10 | 3684 A10 | 3824 A4 | 3883 D5 | 3934 C8 | 3987 A12 | 5611 D13 | 7315 F1 | 7645 C15 |
| 3387 D3 | 3530 F8 | 3578 B11 | 3627 C9 | 3685 A10 | 3825 A4 | 3884 D2 | 3935 A6 | 3988 A10 | 5614 C13 | 7316 F1 | 7650 C14 |
| 3388 D4 | 3533 L6 | 3580 B11 | 3628 B11 | 3686 A11 | 3826 A4 | 3885 B4 | 3936 C6 | 3989 C13 | 5621 C9 | 7317 D1 | 7651 C15 |
| 3389 C4 | 3534 E7 | 3581 B11 | 3629 C10 | 3687 A11 | 3827 A4 | 3886 C3 | 3937 A6 | 3993 A9 | 5622 F10 | 7318 C4 | 7652 D15 |
| 3390 F2 | 3535 F7 | 3582 B11 | 3637 B15 | 3688 A11 | 3828 A3 | 3887 B4 | 3938 C6 | 3994 C13 | 5623 C11 | 7319 D1 | 7657 D14 |
| 3391 F1 | 3536 F6 | 3584 A9 | 3640 B14 | 3689 A12 | 3829 B3 | 3888 E4 | 3939 C7 | 3997 A2 | 5641 C15 | 7320 D1 | 7658 D14 |
| 3392 D3 | 3537 F7 | 3585 A10 | 3641 C14 | 3690 A12 | 3833 A1 | 3889 E4 | 3940 D8 | 3998 A4 | 5650 A14 | 7321 C1 | 7659 D14 |
| 3393 D1 | 3538 F9 | 3587 B10 | 3642 C15 | 3691 A12 | 3834 A1 | 3890 E15 | 3941 B5 | 4500 F8 | 5671 B13 | 7322 D4 | 7681 A10 |
| 3394 D2 | 3539 F9 | 3588 A9 | 3643 B15 | 3692 A10 | 3837 B3 | 3891 D4 | 3942 A5 | 5157 B6 | 5682 A11 | 7323 C2 | 7682 A11 |
| 3395 D1 | 3541 D11 | 3590 F15 | 3644 C14 | 3693 A9 | 3844 A5 | 3895 E15 | 3943 A3 | 5158 B6 | 5700 C7 | 7324 C2 | 7683 A11 |
| 3396 C2 | 3542 D11 | 3591 F14 | 3645 C14 | 3694 A9 | 3845 A4 | 3896 F15 | 3944 B8 | 5300 E1 | 5701 B7 | 7364 F5 | 7684 A12 |
| 3397 C3 | 3543 D11 | 3592 E15 | 3646 C14 | 3695 A11 | 3851 F1 | 3897 C14 | 3945 B7 | 5301 B4 | 6300 C1 | 7402 B1 | 7685 A9 |
| 3398 C3 | 3544 D10 | 3593 F15 | 3647 D14 | 3698 D14 | 3852 D12 | 3898 D15 | 3946 B1 | 5302 B2 | 6305 F3 | 7403 B2 | 7702 D7 |
| 3402 B1 | 3545 D10 | 3595 E14 | 3648 D15 | 3699 C12 | 3853 F5 | 3899 C13 | 3947 A7 | 5303 E2 | 6306 F3 | 7404 B3 | 7777 D3 |
| 3403 B1 | 3546 D10 | 3596 E14 | 3649 D15 | 3700 B6 | 3854 F6 | 3900 B13 | 3948 A7 | 5304 E1 | 6401 B1 | 7501 F9 | 7901 B3 |
| 3404 B2 | 3548 E9 | 3597 E15 | 3650 C15 | 3701 B6 | 3855 F4 | 3901 B13 | 3949 B6 | 5305 E2 | 6551 B9 | 7511 E9 | 7902 C1 |
| 3407 C1 | 3549 D9 | 3598 E15 | 3651 C14 | 3702 B7 | 3856 B4 | 3902 C14 | 3950 C8 | 5306 C1 | 6555 B10 | 7512 E10 | 7904 B2 |
| 3408 C1 | 3550 D10 | 3599 D10 | 3652 B14 | 3705 C7 | 3857 B3 | 3903 B14 | 3951 D8 | 5307 B2 | 6565 A8 | 7513 E10 | 7910 B12 |
| 3409 B2 | 3551 D9 | 3600 D15 | 3653 B13 | 3706 B7 | 3858 C1 | 3904 B13 | 3953 D7 | 5308 E1 | 6681 A10 | 7514 E11 | 7910 C7 |
| 3410 B2 | 3552 D9 | 3601 E15 | 3654 C14 | 3707 C8 | 3859 B2 | 3905 B14 | 3954 E6 | 5309 F4 | 6700 C6 | 7531 E7 | 7911 B7 |
| 3411 B3 | 3553 B9 | 3602 E14 | 3655 D14 | 3708 C8 | 3860 D2 | 3906 B14 | 3955 D6 | 5310 E3 | 6755 D7 | 7532 F9 | 7912 A4 |
| 3413 C6 | 3554 D10 | 3603 D11 | 3656 D14 | 3709 C8 | 3861 E2 | 3907 B14 | 3956 D6 | 5311 E1 | 6805 A3 | 7561 C10 | 7913 A4 |
| 3415 C6 | 3555 B10 | 3604 D11 | 3657 D14 | 3711 C8 | 3862 F4 | 3908 C13 | 3957 D6 | 5312 C2 | 6806 A3 | 7562 C9 | 7914 A6 |
| 3416 B1 | 3556 C9 | 3605 D13 | 3658 D14 | 3721 B6 | 3863 D3 | 3910 D12 | 3958 L6 | 5313 D1 | 6807 A2 | 7563 C10 | 7915 A7 |
| 3505 F11 | 3557 B9 | 3606 E12 | 3659 D14 | 3722 B7 | 3864 D2 | 3911 E8 | 3959 D6 | 5314 D2 | 6808 A2 | 7564 C9 | 7920 E7 |
| 3511 E9 | 3558 A9 | 3607 D12 | 3660 D14 | 3753 D6 | 3865 D2 | 3912 E7 | 3960 D7 | 5315 D2 | 6809 A1 | 7565 B9 | 7921 B9 |
| 3512 E9 | 3559 C10 | 3608 D13 | 3661 C14 | 3754 D7 | 3866 D1 | 3913 E6 | 3961 A2 | 5316 D1 | 6810 B1 | 7567 B9 | 7922 C11 |
| 3513 E9 | 3560 C10 | 3609 D12 | 3663 B15 | 3755 D7 | 3868 E2 | 3914 C13 | 3970 C12 | 5317 C3 | 6810 B1 | 7581 B11 | 7923 E15 |
| 3514 F9 | 3561 C9 | 3610 D14 | 3664 B15 | 3804 B1 | 3869 F2 | 3915 E11 | 3971 B11 | 5318 C2 | 6811 D5 | 7582 A10 | 7924 C12 |
| 3515 F9 | 3562 C9 | 3611 D13 | 3665 B15 | 3805 A1 | 3870 E3 | 3916 E10 | 3972 A8 | 5364 F5 | 6812 D5 | 7583 A10 | 7926 A12 |
| 3517 E10 | 3563 D9 | 3612 D13 | 3666 A15 | 3806 A3 | 3871 E2 | 3917 C13 | 3973 C10 | 5365 F5 | 7302 D3 | 7590 F15 | VCO2 A2 |

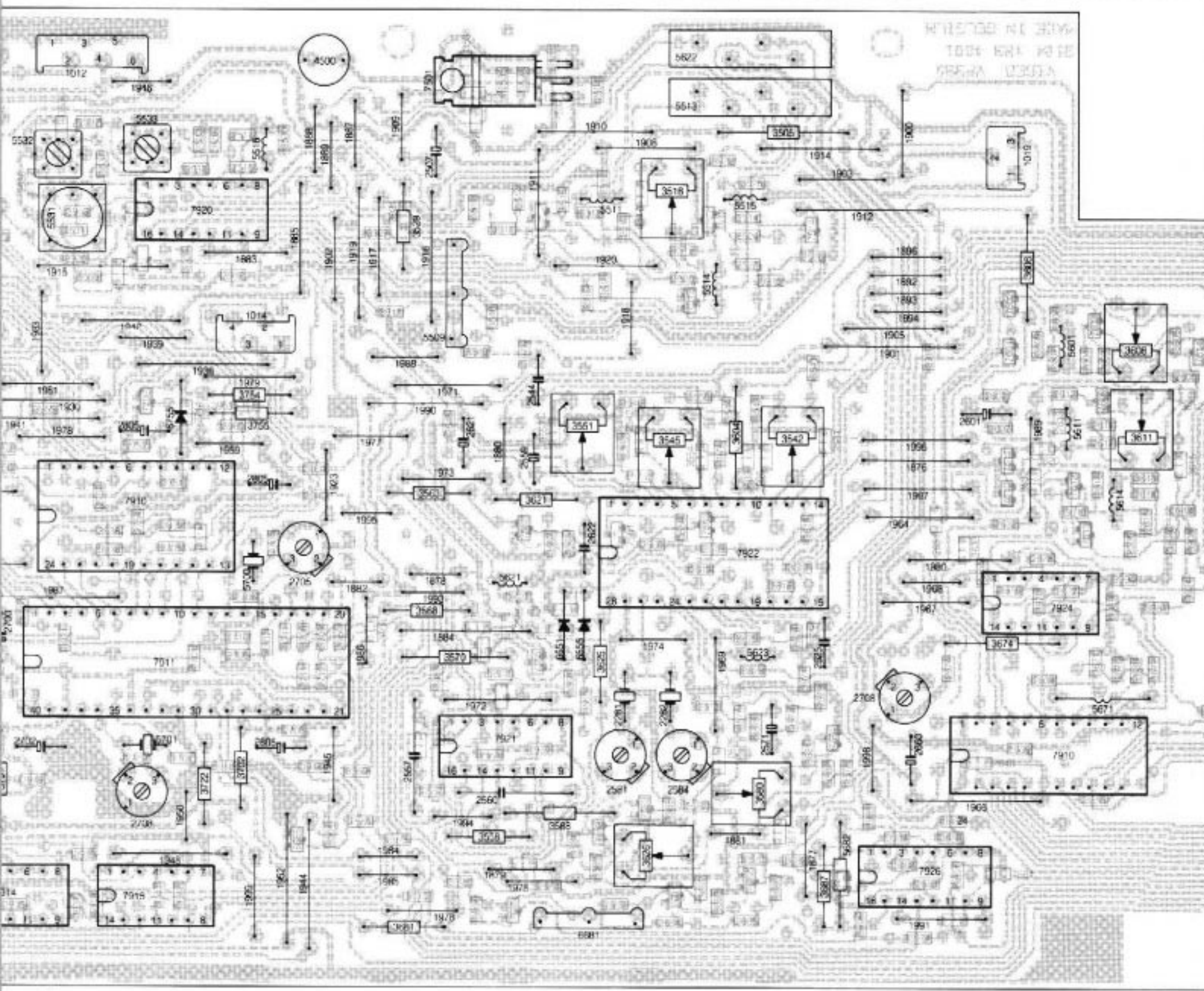

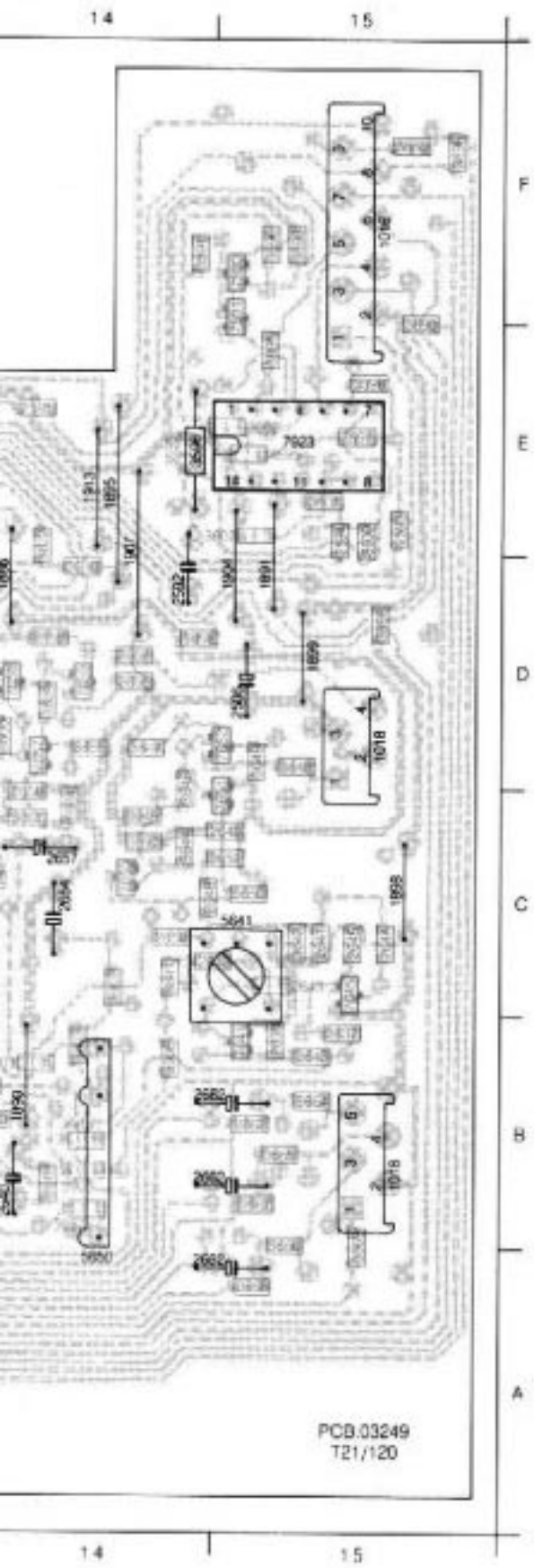
14
15
E
D
C
B
A
7923
PCB.03249
T21/120

**PARTSLIST VIDEOPANEL**

**Connectors**

| | | |
|---|---|---|
| 1011 | 4822 267 40575 | 3P MALE FOR WTB |
| 1012 | 4822 267 40722 | |
| 1014 | 4822 267 40699 | 4.FOLD |
| 1017 | 4822 265 30378 | 4P MALE FOR BTB-WTB |
| 1018 | 4822 265 30378 | 4P MALE FOR BTB-WTB |

**unit**

| | | |
|---|---|---|
| 1900 | 4822 214 51801 | |

⊣⊢

| | | |
|---|---|---|
| 2311 | 4822 124 40435 | 10UF20% 50V |
| 2318 | 4822 124 41577 | 4,7UF 20% 50V |
| 2320 | 4822 124 40433 | 47UF20% 25V |
| 2329 | 4822 122 32185 | 10PF 2% 100V |
| 2333 | 4822 122 32062 | 470PF 2% 100V |
| 2343 | 4822 121 43066 | 1NF 1% 400V |
| 2346 | 4822 122 33064 | 330NF80%Y5V 25V |
| 2352 | 4822 122 33105 | 56NF10%X7R 63V |
| 2355 | 4822 124 40196 | 220UF20% 16V |
| 2357 | 4822 124 40196 | 220UF20% 16V |
| 2359 | 4822 124 40196 | 220UF20% 16V |
| 2373 | 4822 122 31316 | 100PF 2% 100V |
| 2384 | 4822 124 40435 | 10UF20% 50V |
| 2385 | 4822 124 40435 | 10UF20% 50V |
| 2395 | 4822 122 32444 | 33PF 5% 50V |
| 2412 | 4822 122 33325 | 470NF 16V |
| 2501 | 4822 122 33325 | 470NF 16V |
| 2506 | 4822 124 40196 | 220UF20% 16V |
| 2507 | 4822 124 40433 | 47UF20% 25V |
| 2511 | 4822 124 41596 | 22UF20% 50V |
| 2544 | 5322 121 42386 | 100NF 5% 63V |
| 2557 | 4822 121 51321 | 8,2MF 1% 63V |
| 2559 | 4822 124 41577 | 4,7UF 20% 50V |
| 2560 | 4822 121 51321 | 8,2MF 1% 63V |
| 2581 | 4822 125 50045 | 20PF |
| 2584 | 4822 125 50045 | 20PF |
| 2591 | 4822 122 33325 | 470NF 16V |
| 2601 | 4822 124 40433 | 47UF20% 25V |
| 2621 | 4822 124 41525 | 100UF 20% 25V |
| 2622 | 4822 121 43867 | 22NF 5% 50V |
| 2625 | 4822 124 40242 | 1UF20% 63V |
| 2631 | 4822 122 33064 | 330NF80%Y5V 25V |
| 2632 | 4822 122 33064 | 330NF80%Y5V 25V |
| 2633 | 4822 122 33064 | 330NF80%Y5V 25V |
| 2640 | 5322 121 42114 | 1UF 5% 63V |
| 2644 | 4822 122 33205 | 12PF10%NP0 63V |
| 2654 | 4822 124 40433 | 47UF20% 25V |
| 2657 | 4822 124 40435 | 10UF20% 50V |
| 2660 | 4822 124 40196 | 220UF20% 16V |
| 2662 | 4822 124 40196 | 220UF20% 16V |
| 2664 | 4822 124 40196 | 220UF20% 16V |
| 2666 | 4822 124 40196 | 220UF20% 16V |
| 2675 | 4822 125 50045 | 20PF |
| 2700 | 4822 124 40435 | 10UF20% 50V |
| 2702 | 4822 124 40196 | 220UF20% 16V |
| 2704 | 4822 124 40196 | 220UF20% 16V |
| 2705 | 4822 125 50045 | 20PF |
| 2706 | 5322 122 32143 | 22PF 100V |
| 2708 | 4822 125 50045 | 20PF |
| 2753 | 4822 124 40196 | 220UF20% 16V |
| 2758 | 4822 124 40196 | 220UF20% 16V |
| 2805 | 4822 124 40196 | 220UF20% 16V |
| 2806 | 4822 124 40272 | 33UF20% 16V |
| 2807 | 4822 121 43868 | 1,5NF 5% 50V |

⊣⊢

| | | |
|---|---|---|
| 2820 | 4822 121 43869 | 68NF 5% 50V |
| 2821 | 4822 121 43867 | 22NF 5% 50V |
| 2827 | 4822 124 40196 | 220UF20% 16V |
| 2828 | 4822 124 40196 | 220UF20% 16V |
| 2829 | 4822 121 43867 | 22NF 5% 50V |
| 2846 | 4822 121 41854 | 150NF 5% 63V |

▭

| | | |
|---|---|---|
| 3316 | 4822 050 14709 | 47R00 1% 0,4W |
| 3318 | 4822 050 21801 | 180R00 1% 0,6W |
| 3338 | 5322 101 10372 | 10K 20% 0,5W |
| 3346 | 4822 050 15602 | 5K60 1% 0,4W |
| 3353 | 4822 050 24703 | 47K00 1% 0,6W |
| 3354 | 4822 050 21002 | 1K00 1% 0,6W |
| 3361 | 4822 052 10478 | 4R70 5% 0,33W |
| 3362 | 4822 052 10478 | 4R70 5% 0,33W |
| 3363 | 4822 052 10478 | 4R70 5% 0,33W |
| 3402 | 4822 050 21002 | 1K00 1% 0,6W |
| 3403 | 4822 050 21501 | 150R00 1% 0,6W |
| 3407 | 4822 050 22202 | 2K20 1% 0,6W |
| 3412 | 4822 050 22401 | 240R00 1% 0,6W |
| 3505 | 4822 052 10478 | 4R70 5% 0,33W |
| 3518 | 5322 101 14011 | 100E CERM LIN 0,5W |
| 3527 | 4822 050 29101 | 910R00 1% 0,6W |
| 3529 | 4822 050 15602 | 5K60 1% 0,4W |
| 3542 | 5322 101 10372 | 10K 20% 0,5W |
| 3545 | 5322 101 10372 | 10K 20% 0,5W |
| 3551 | 5322 101 10372 | 10K 20% 0,5W |
| 3558 | 4822 050 29103 | 91K00 1% 0,6W |
| 3562 | 4822 051 10473 | 47K00 2% 0,25W |
| 3568 | 4822 050 23302 | 3K30 1% 0,6W |
| 3570 | 4822 050 23302 | 3K30 1% 0,6W |
| 3580 | 5322 101 14008 | 2K2 CERM LIN 0,5W |
| 3596 | 4822 050 21002 | 1K00 1% 0,6W |
| 3608 | 5322 101 14008 | 2K2 CERM LIN 0,5W |
| 3611 | 5322 101 14008 | 2K2 CERM LIN 0,5W |
| 3621 | 4822 052 10478 | 4R70 5% 0,33W |
| 3626 | 4822 100 10254 | 1K CERM LIN 0,5W |
| 3674 | 4822 050 22202 | 2K20 1% 0,6W |
| 3681 | 4822 050 21002 | 1K00 1% 0,6W |
| 3683 | 4822 051 10102 | 1K00 2% 0,25W |
| 3687 | 4822 050 22202 | 2K20 1% 0,6W |
| 3701 | 4822 052 10478 | 4R70 5% 0,33W |
| 3702 | 4822 052 10121 | 120R00 5% 0,33W |
| 3710 | 4822 050 21002 | 1K00 1% 0,6W |
| 3722 | 4822 116 52224 | 470E 5% 0,5W |
| 3754 | 4822 050 21002 | 1K00 1% 0,6W |
| 3755 | 4822 050 23309 | 33R00 1% 0,6W |
| 3804 | 4822 116 52217 | 270E 5% 0,5W |
| 3814 | 4822 050 24122 | 4K12 1% 0,6W |
| 3833 | 4822 052 10109 | 10R00 5% 0,33W |
| 3834 | 4822 052 10109 | 10R00 5% 0,33W |
| 5158 | 4822 156 21452 | 100UH |

⌐⌐

| | |
|---|---|
| 5300 | 4822 157 63052 |
| 5301 | 4822 157 53137 |
| 5302 | 4822 157 60017 |
| 5303 | 4822 156 11001 |
| 5304 | 4822 157 53132 |
| 5305 | 4822 156 21147 |
| 5306 | 4822 320 40229 |
| 5307 | 4822 156 10995 |
| 5308 | 4822 156 11003 |

| | | |
|---|---|---|
| 5309 | 4822 157 60032 | |
| 5310 | 4822 157 60032 | |
| 5311 | 4822 157 63058 | |
| 5312 | 4822 242 73978 | SLP4042 |
| 5313 | 4822 157 53134 | |
| 5314 | 4822 156 11003 | |
| 5315 | 4822 156 11003 | |
| 5316 | 4822 156 11003 | |
| 5317 | 4822 157 53267 | SLP102535C3C-4223-01 |
| 5318 | 4822 157 53134 | |
| 5364 | 4822 156 10996 | |
| 5365 | 4822 156 10996 | |
| 5380 | 4822 157 53134 | |
| 5400 | 4822 242 73555 | 5,900 000 MC |
| 5509 | 4822 320 40229 | |
| 5511 | 4822 157 52473 | 19UH |
| 5513 | 5322 320 40099 | |
| 5514 | 4822 156 21026 | 34 UH |
| 5515 | 4822 157 52473 | 19UH |
| 5516 | 4822 157 63057 | |
| 5531 | 4822 157 52875 | |
| 5532 | 4822 157 52873 | |
| 5533 | 4822 157 52874 | |
| 5581 | 4822 242 71284 | 7,159 090 MC RW43 |
| 5582 | 4822 242 80001 | |
| 5601 | 4822 156 11001 | |
| 5611 | 4822 156 11001 | |
| 5614 | 4822 156 11001 | |
| 5621 | 4822 156 10995 | |
| 5622 | 4822 320 40051 | CHROMINANCE |
| 5623 | 4822 157 53258 | |
| 5641 | 4822 157 53259 | 166NNF10264AG |
| 5650 | 4822 320 40247 | |
| 5671 | 4822 156 20966 | 47 MUH |
| 5675 | 4822 242 70933 | 4,433 619 MC RW43 |
| 5681 | 4822 320 40229 | |
| 5682 | 4822 156 21452 | 100UH |

X-tal

| | | |
|---|---|---|
| 5700 | 4822 242 71861 | 14,300 000 MC |
| 5701 | 4822 242 72514 | 15,000 000 MC |

| | | |
|---|---|---|
| 6300 | 4822 130 30862 | BZX55-C9V1 |
| 6305 | 5322 130 31928 | BAS16 |
| 6306 | 4822 130 31983 | BAT85 |
| 6401 | 4822 130 34173 | BZX55-C5V6 |
| 6402 | 5322 130 34834 | BZX55-C3V6 |
| 6551 | 4822 130 30621 | 1N4148 (UAW) |
| 6555 | 4822 130 30621 | 1N4148 (UAW) |
| 6625 | 4822 130 30621 | 1N4148 (UAW) |
| 6700 | 4822 130 30621 | 1N4148 (UAW) |
| 6755 | 4822 130 34173 | BZX55-C5V6 |
| 6805 | 4822 130 30621 | 1N4148 (UAW) |
| 6806 | 4822 130 30621 | 1N4148 (UAW) |
| 6807 | 4822 130 81375 | BZX84-C3V9 |
| 6808 | 4822 130 81375 | BZX84-C3V9 |
| 6809 | 4822 130 33668 | BZX55-B9V1 |
| 6810 | 4822 130 33668 | BZX55-B9V1 |

| | | |
|---|---|---|
| 7302 | 5322 130 41983 | BC858BT |
| 7304 | 5322 130 41982 | BC848BT |
| 7305 | 5322 130 41982 | BC848BT |
| 7306 | 4822 130 60514 | BC859B |
| 7307 | 4822 130 60887 | BF840 |
| 7308 | 5322 130 41983 | BC858BT |
| 7309 | 5322 130 41982 | BC848BT |
| 7310 | 5322 130 41982 | BC848BT |
| 7311 | 5322 130 41983 | BC858BT |
| 7312 | 5322 130 41982 | BC848BT |
| 7313 | 5322 130 41982 | BC848BT |
| 7314 | 5322 130 41982 | BC848BT |
| 7315 | 5322 130 41983 | BC858BT |
| 7316 | 5322 130 41982 | BC848BT |
| 7317 | 5322 130 41982 | BC848BT |
| 7318 | 5322 130 41982 | BC848BT |
| 7319 | 5322 130 41983 | BC858BT |
| 7320 | 5322 130 41982 | BC848BT |
| 7321 | 5322 130 41982 | BC848BT |
| 7322 | 5322 130 41982 | BC848BT |
| 7323 | 5322 130 41982 | BC848BT |
| 7324 | 5322 130 41982 | BC848BT |
| 7364 | 5322 130 41983 | BC858BT |
| 7402 | 5322 130 41982 | BC848BT |
| 7403 | 5322 130 41983 | BC858BT |
| 7404 | 5322 130 41983 | BC858BT |
| 7501 | 4822 209 62085 | LM2940CT-12 |
| 7511 | 5322 130 41982 | BC848BT |
| 7512 | 5322 130 41983 | BC858BT |
| 7513 | 5322 130 41983 | BC858BT |
| 7514 | 5322 130 41982 | BC848BT |
| 7531 | 5322 130 41982 | BC848BT |
| 7532 | 5322 130 41982 | BC848BT |
| 7561 | 5322 130 41982 | BC848BT |
| 7562 | 5322 130 41982 | BC848BT |
| 7563 | 5322 130 44336 | BSV52 |
| 7564 | 5322 130 44336 | BSV52 |
| 7567 | 5322 130 41982 | BC848BT |
| 7581 | 5322 130 41982 | BC848BT |
| 7582 | 5322 130 41982 | BC848BT |
| 7583 | 5322 130 41982 | BC848BT |
| 7590 | 5322 130 41982 | BC848BT |
| 7591 | 5322 130 44336 | BSV52 |
| 7601 | 5322 130 41982 | BC848BT |
| 7602 | 5322 130 41982 | BC848BT |
| 7603 | 5322 130 41982 | BC848BT |
| 7609 | 5322 130 41982 | BC848BT |
| 7610 | 5322 130 41982 | BC848BT |
| 7611 | 5322 130 41982 | BC848BT |
| 7612 | 5322 130 41982 | BC848BT |
| 7613 | 5322 130 41982 | BC848BT |
| 7614 | 5322 130 41982 | BC848BT |
| 7641 | 5322 130 41982 | BC848BT |
| 7645 | 5322 130 41982 | BC848BT |
| 7650 | 5322 130 41982 | BC848BT |
| 7651 | 5322 130 41983 | BC858BT |
| 7652 | 5322 130 41982 | BC848BT |
| 7657 | 5322 130 41982 | BC848BT |
| 7658 | 4822 130 60514 | BC859B |
| 7659 | 5322 130 41982 | BC848BT |
| 7662 | 5322 130 41982 | BC848BT |
| 7681 | 5322 130 41982 | BC848BT |
| 7682 | 5322 130 41983 | BC858BT |
| 7683 | 5322 130 42136 | BC848CT |
| 7684 | 5322 130 41982 | BC848BT |
| 7685 | 5322 130 41982 | BC848BT |
| 7702 | 5322 130 41982 | BC848BT |

| | | |
|---|---|---|
| 7901 | 4822 209 63716 | NJM2233BD |
| 7902 | 4822 209 63704 | MSM7400 |
| 7903 | 4822 209 30216 | TEA7650H/V4 |
| 7904 | 4822 209 62877 | SAA7630P |
| 7910 | 4822 209 63703 | TBC-MA3 |
| 7911 | 4822 209 60753 | TBC M-D |
| 7912 | 4822 209 81349 | MC1458P1 |
| 7913 | 4822 209 81349 | MC1458P1 |
| 7914 | 4822 209 63505 | PC74HC40103P |
| 7915 | 5322 209 83218 | PC74HC00P |
| 7920 | 4822 209 71584 | PC74HCT4053P |
| 7921 | 5322 209 10422 | HEF4538BP |
| 7922 | 4822 209 61689 | TDA3566/N5 |
| 7923 | 5322 209 11265 | PC74HCT08P |
| 7924 | 5322 209 83218 | PC74HC00P |
| 7925 | 4822 209 63497 | CXA1145P |
| 7926 | 4822 209 71584 | PC74HCT4053P |

## DIGITAL AUDIO PRINT LAY-OUT

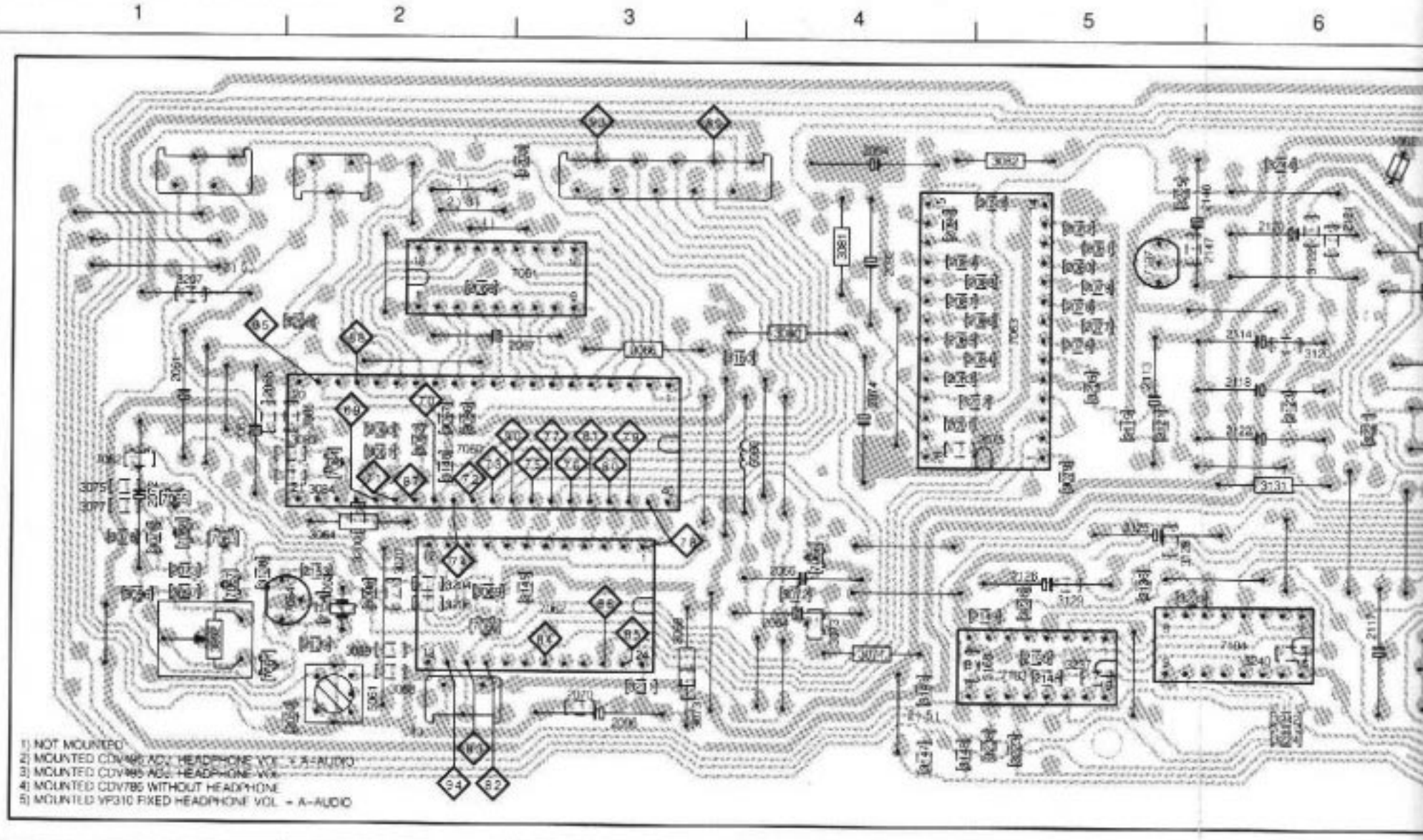


| | | | | | | | | | | | | | | | |
|---|---|---|---|---|---|---|---|---|---|---|---|---|---|---|---|
| 1002 A6 | 2067 B2 | 2078 A5 | 2087 A4 | 2097 C8 | 2108 C7 | 2122 B6 | 2140 C10 | 2150 B8 | 3068 C3 | 3077 B1 | 3086 B2 | 3098 C2 | 3110 C7 | 3121 B5 | 3131 B |
| 1063 C2 | 2068 A2 | 2079 A5 | 2088 A4 | 2098 C8 | 2109 B7 | 2123 B6 | 2142 C9 | 2151 B8 | 3069 C2 | 3078 B1 | 3088 C2 | 3102 C7 | 3111 B7 | 3122 A6 | 3132 A |
| 2050 C2 | 2070 C3 | 2080 A5 | 2089 A4 | 2099 A6 | 2110 C7 | 2125 B5 | 2143 C9 | 2153 C2 | 3070 C2 | 3079 B5 | 3089 C2 | 3103 B7 | 3112 C7 | 3123 A9 | 3138 C |
| 2060 B2 | 2072 B1 | 2081 A5 | 2090 A4 | 2101 B7 | 2113 B5 | 2126 C5 | 2144 C10 | 2154 C2 | 3071 C4 | 3080 B4 | 3092 C1 | 3104 C7 | 3113 B7 | 3124 A9 | 3139 C |
| 2061 B1 | 2073 C1 | 2082 A5 | 2091 B4 | 2102 C7 | 2114 B6 | 2129 B10 | 2145 C9 | 3061 B2 | 3072 C4 | 3081 A4 | 3093 B9 | 3105 B7 | 3114 C7 | 3125 A9 | 3141 B |
| 2063 B1 | 2074 B4 | 2083 B4 | 2092 A4 | 2103 B7 | 2117 C6 | 2130 B10 | 2146 A6 | 3062 B2 | 3073 C3 | 3082 A5 | 3094 B9 | 3106 C7 | 3115 B8 | 3126 A9 | 3142 B |
| 2064 C4 | 2075 B5 | 2084 B4 | 2093 A5 | 2104 C8 | 2118 B6 | 2135 C5 | 2147 A8 | 3064 B2 | 3073 C4 | 3083 B2 | 3095 B9 | 3107 B7 | 3116 C8 | 3128 C5 | 3143 A |
| 2065 B1 | 2076 B5 | 2085 B4 | 2094 A4 | 2105 B7 | 2120 A6 | 2136 C5 | 2148 C5 | 3066 B3 | 3075 B1 | 3084 B2 | 3096 C1 | 3108 C7 | 3119 B5 | 3129 C5 | 3144 B |
| 2066 C4 | 2077 A5 | 2086 A4 | 2098 C3 | 2107 B7 | 2121 A6 | 2137 C7 | 2149 C5 | 3067 B2 | 3076 B1 | 3085 B2 | 3097 C1 | 3109 B7 | 3120 B6 | 3130 A6 | 3145 C |

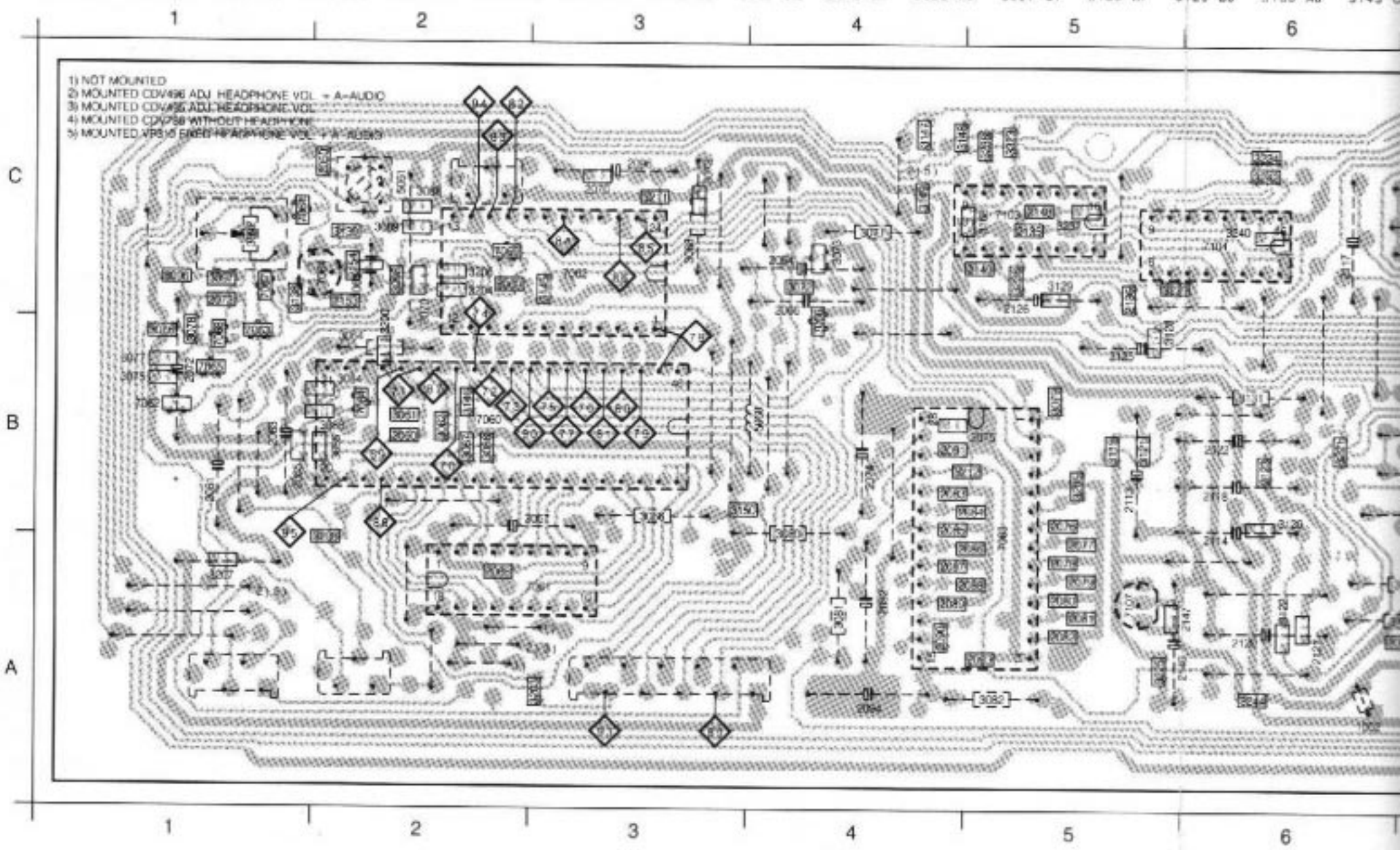

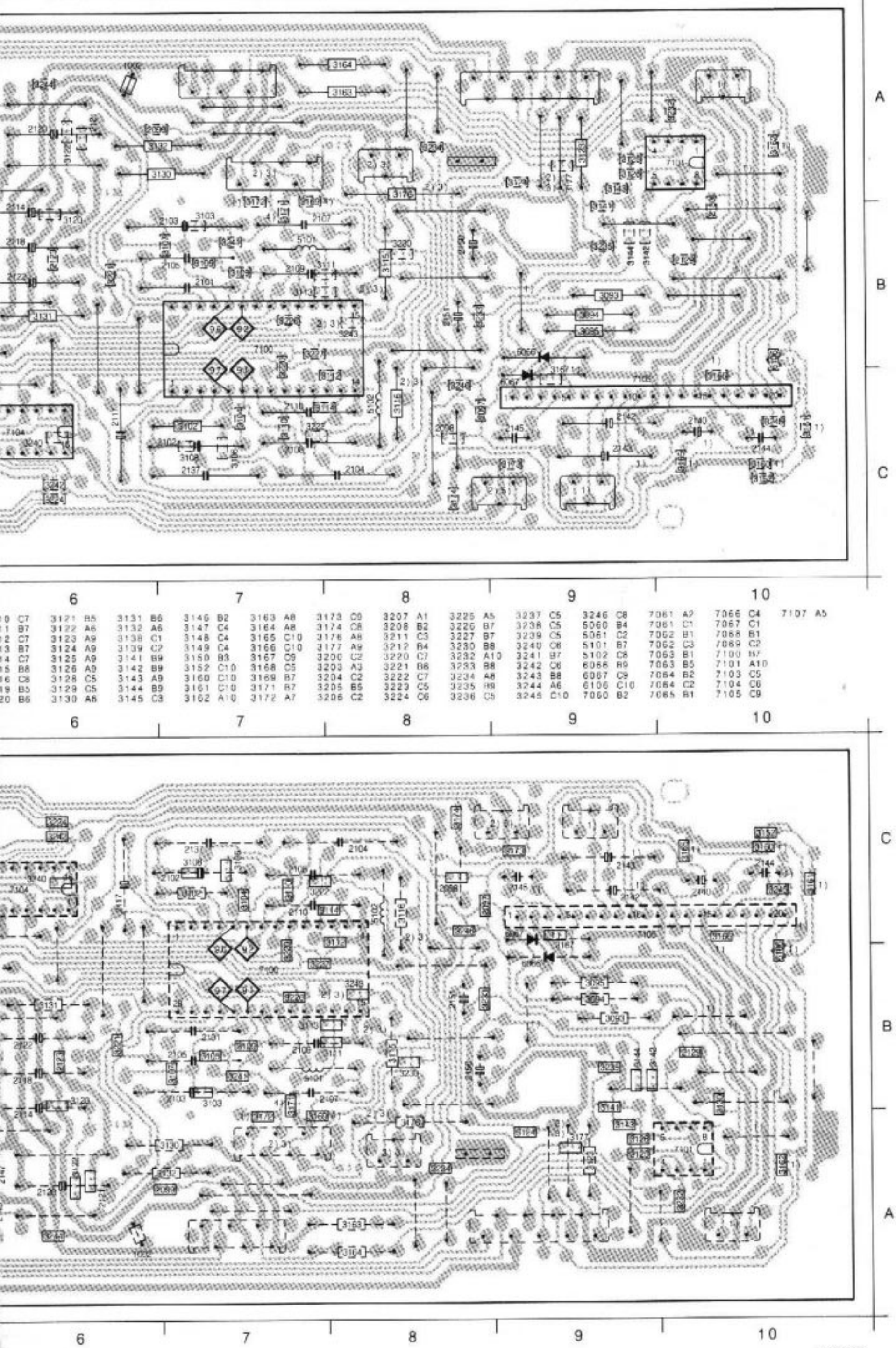

| | | | | | | | | | | | | | | |
|---|---|---|---|---|---|---|---|---|---|---|---|---|---|---|
| 2120 C7 | 3121 B5 | 3131 B6 | 3146 B2 | 3163 A8 | 3173 C9 | 3207 A1 | 3225 A5 | 3237 C5 | 3246 C8 | 7061 A2 | 7066 C4 | 7107 A5 | | |
| 2121 B7 | 3122 A6 | 3132 A6 | 3147 C4 | 3164 A8 | 3174 C8 | 3208 B2 | 3226 B7 | 3238 C5 | 5060 B4 | 7061 C1 | 7067 C1 | | | |
| 2122 C7 | 3123 A9 | 3138 C1 | 3148 C4 | 3165 C10 | 3176 A8 | 3211 C3 | 3227 B7 | 3239 C5 | 5061 C2 | 7062 B1 | 7068 B1 | | | |
| 2123 B7 | 3124 A9 | 3139 C2 | 3149 C4 | 3166 C10 | 3177 A9 | 3212 B4 | 3230 B8 | 3240 C6 | 5101 B7 | 7062 C3 | 7069 C2 | | | |
| 2124 C7 | 3125 A9 | 3141 B9 | 3150 B3 | 3167 C9 | 3200 C2 | 3220 C7 | 3232 A10 | 3241 B7 | 5102 C8 | 7063 B1 | 7100 B7 | | | |
| 2125 B8 | 3126 A9 | 3142 B9 | 3152 C10 | 3168 C5 | 3203 A3 | 3221 B6 | 3233 B8 | 3242 C6 | 6066 B9 | 7063 B5 | 7101 A10 | | | |
| 2126 C8 | 3128 C5 | 3143 A9 | 3160 C10 | 3169 B7 | 3204 C2 | 3222 C7 | 3234 A8 | 3243 B8 | 6067 C9 | 7064 B2 | 7103 C5 | | | |
| 2129 B5 | 3129 C5 | 3144 B9 | 3161 C10 | 3171 B7 | 3205 B5 | 3223 C5 | 3235 B9 | 3244 A6 | 6106 C10 | 7064 C2 | 7104 C6 | | | |
| 2220 B6 | 3130 A6 | 3145 C3 | 3162 A10 | 3172 A7 | 3206 C2 | 3224 C6 | 3236 C5 | 3245 C10 | 7060 B2 | 7065 B1 | 7105 C9 | | | |



PCB 01819
03/945

| | | | | | | | | | | | | | | | | | | | | | | | | |
|---|---|---|---|---|---|---|---|---|---|---|---|---|---|---|---|---|---|---|---|---|---|---|---|---|
| 7 | 2108 J 4 | 2115 C 9 | 2121 D12 | 2127 B14 | 2133 G11 | 2139 I16 | 2145 F14 | 2152 C20 | 2159 A20 | 2222 F 3 | 3104 B 8 | 3110 D13 | 3116 B11 | 3122 G11 | 3128 H11 | 3134 F13 | 3145 B21 | | | | | | | |
| 7 | 2110 J 4 | 2116 C 9 | 2122 F13 | 2128 A16 | 2134 G13 | 2140 H13 | 2146 B18 | 2154 B19 | 2161 C20 | 2224 E 6 | 3100 E 6 | 3105 H 8 | 3111 A13 | 3117 B 9 | 3123 H12 | 3129 E14 | 3135 H16 | 3146 H12 | | | | | | | |
| 7 | 2111 A 8 | 2117 B 9 | 2123 D14 | 2129 B13 | 2135 I11 | 2141 H14 | 2147 H18 | 2155 H19 | 2162 I20 | 3101 F 6 | 3106 B11 | 3112 B13 | 3118 A14 | 3124 H11 | 3130 I15 | 3136 E18 | 3150 J 4 | | | | | | | |
| 7 | 2112 A 7 | 2118 B11 | 2124 D14 | 2130 H 9 | 2136 E15 | 2142 I12 | 2148 G20 | 2156 L 4 | 2218 E 5 | 3102 B 7 | 3107 D12 | 3113 B12 | 3119 C11 | 3125 G14 | 3131 F12 | 3138 B18 | 3152 G19 | | | | | | | |
| 8 | 2113 G 7 | 2119 B13 | 2125 B13 | 2131 H 9 | 2137 H13 | 2143 G13 | 2149 B20 | 2157 L 5 | 2219 E 3 | 3103 H 7 | 3108 D13 | 3114 B12 | 3120 A16 | 3126 G14 | 3132 F13 | 3139 H18 | 3153 L 4 | | | | | | | |
| 8 | 2114 G 8 | 2120 C11 | 2126 B14 | 2132 H 9 | 2138 H14 | 2144 F14 | 2150 H20 | 2158 L 5 | 2221 E 3 | | 3109 D13 | 3115 A14 | 3121 G 9 | 3127 H15 | 3133 F13 | 3143 H20 | 3154 L 4 | | | | | | | |

1 2 3 4 5 6 7 8 9 10 11 12

# A AUDIO PANEL

AUDIO L

AUDIO R

LV ONLY

ADJ DISTORSION LEFT

ADJ DISTORSION RIGHT

ADJ WITH PM6008 TEST DISC 1kHz 0dB

MP ◇ 7 ≥ 0.8% DISTORSION

MP ◇ 7 ≥ 0.6% DISTORSION

ADJ LPF 2.85MHz

ADJ 1.37MHz

ADJ 2.13MHz

1kHz 0dB-ADJ FOR 625mV RMS ON CINCH FOR 310mV RMS ON SCART

1kHz 0dB-ADJ: FOR 625mV RM ON CINCH FOR 310mV RM ON SCART

ADJ D.C. LEFT

ADJ D.C. RIGHT

ADJ AMP. LEFT

ADJ AMP. RIGHT

+5A +12V -12V +5V -10V +5B

| | | | | | | | | | | | | | | | |
|---|---|---|---|---|---|---|---|---|---|---|---|---|---|---|---|
| 3128 H11 | 3134 F13 | 3145 B21 | 3155 L 4 | 3162 B19 | 3223 E 2 | 3229 F 3 | 5100 B 9 | 5204 E 3 | 7105 E 2 | 7152 B1 | | | | | |
| 3129 E14 | 3135 H16 | 3146 H12 | 3156 L 5 | 3163 E19 | 3224 F 2 | 3230 E 4 | 5101 H 9 | 7100 D12 | 7106 K 4 | 7154 A19 | | | | | |
| 3130 E15 | 3136 E19 | 3150 J 4 | 3157 L 5 | 3165 B21 | 3225 E 2 | 3231 D 4 | 5102 D13 | 7101 B12 | 7107 E 4 | 7154 Q19 | | | | | |
| 3131 F12 | 3138 B18 | 3152 G19 | 3158 H20 | 3166 Q21 | 3226 F 2 | 3232 E 5 | 5103 B13 | 7102 G12 | 7108 E 5 | | | | | | |
| 3132 F13 | 3139 H18 | 3153 L 4 | 3160 C20 | 3220 F 2 | 3227 E 4 | 3233 F 5 | 5104 G13 | 7103 E12 | 7152 A10 | | | | | | |
| 3133 F13 | 3143 H20 | 3154 L 4 | 3161 E19 | 3221 F 2 | 3228 E 4 | 3234 E 5 | 5105 F13 | 7104 E18 | 7152 G10 | | | | | | |

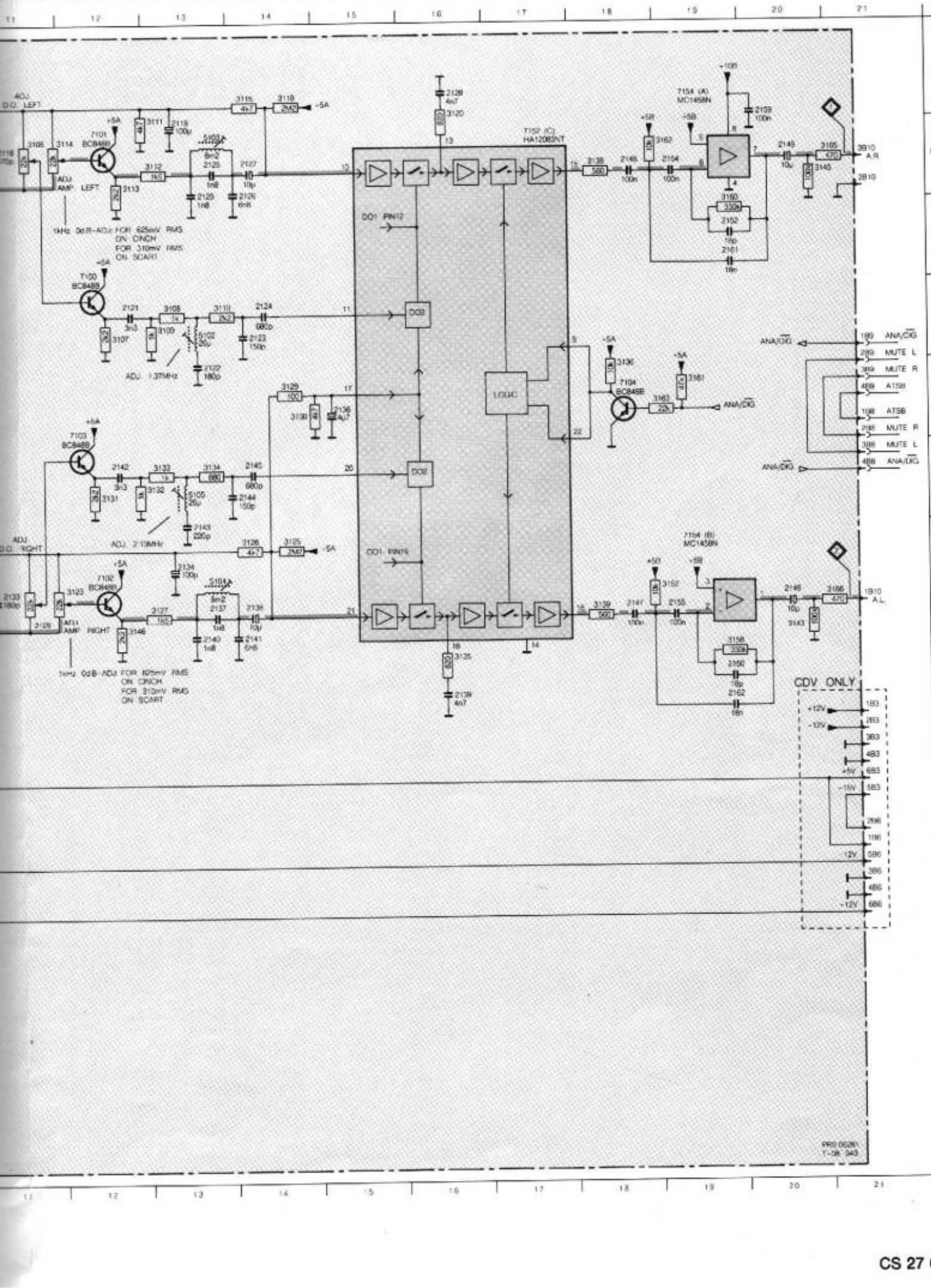

## 6.12 TRAYMOTOR CIRCUITDIAGRAM
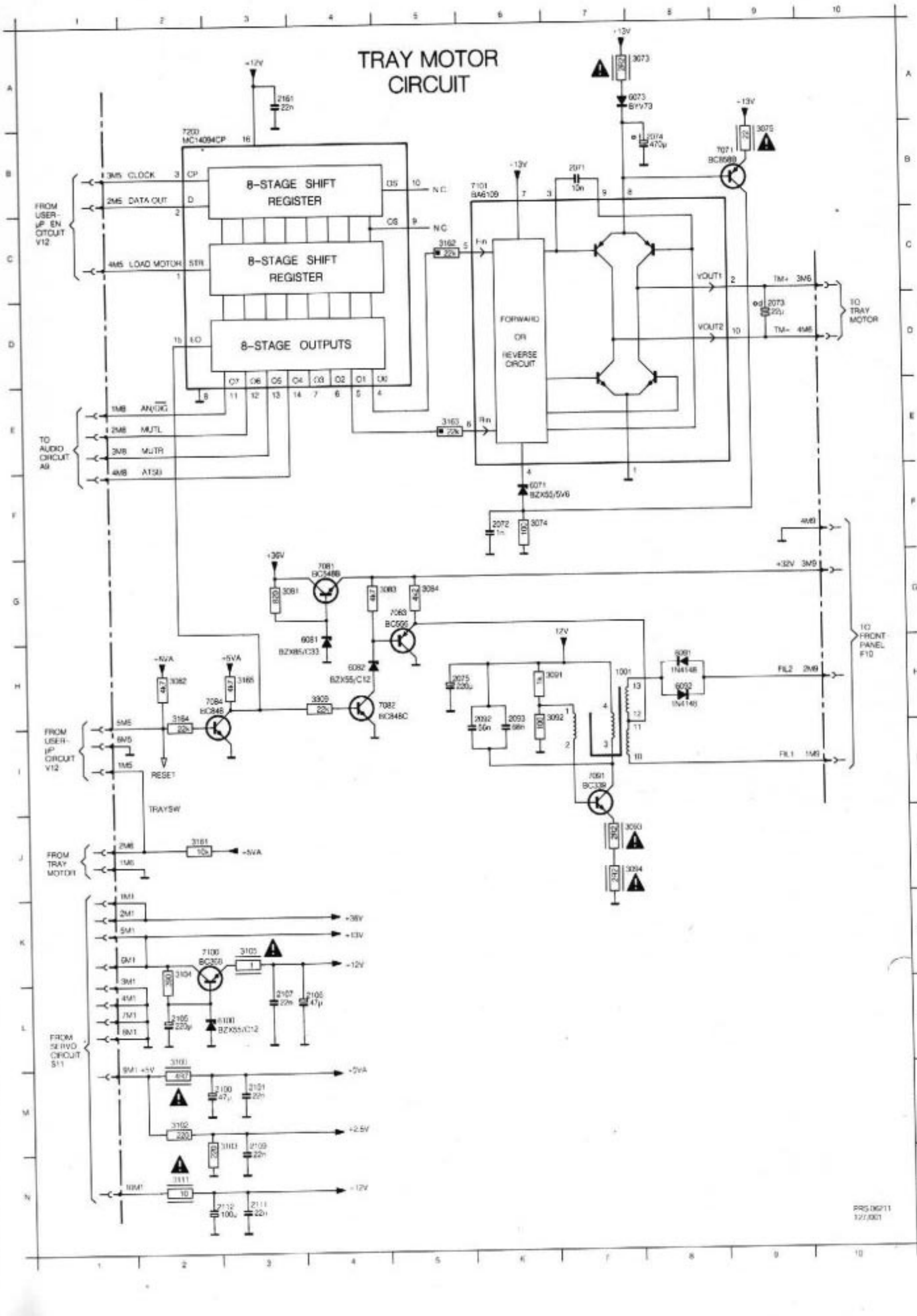
| | | | | | | | | | | | | | | | | | | | | | | | |
|---|---|---|---|---|---|---|---|---|---|---|---|---|---|---|---|---|---|---|---|---|---|---|---|
| 1001 | G 7 | 2075 | G 5 | 2105 | L 2 | 2112 | N 3 | 3081 | F 3 | 3092 | H 7 | 3103 | M 3 | 3162 | C 5 | 6071 | F 6 | 6092 | G 8 | 7084 | H 3 |
| 2071 | H 7 | 2092 | H 6 | 2106 | L 4 | 2161 | A 4 | 3082 | G 2 | 3093 | I 7 | 3104 | K 2 | 3163 | E 5 | 6073 | A 8 | 6100 | L 3 | 7091 | I 7 |
| 2072 | F 6 | 2093 | H 6 | 2107 | L 3 | 3073 | A 8 | 3083 | F 5 | 3094 | J 7 | 3105 | K 3 | 3164 | H 2 | 6081 | G 4 | 7071 | B 9 | 7100 | K 2 |
| 2073 | D 9 | 2100 | M 3 | 2108 | M 3 | 3074 | F 6 | 3084 | F 5 | 3100 | L 2 | 3111 | N 2 | 3165 | G 3 | 6082 | G 4 | 7081 | F 4 | 7101 | B 6 |
| 2074 | B 8 | 2101 | M 3 | 2111 | N 3 | 3075 | B 9 | 3091 | G 7 | 3102 | M 2 | 3161 | J 2 | 3309 | H 4 | 6091 | G 8 | 7082 | H 5 | 7200 | B 2 |