MADE IN THE U.S.A.

TAITO®

DARIUS™

OPERATING MANUAL

MADE IN THE U.S.A.

TAITO®

TAITO AMERICA CORPORATION
660 S. Wheeling Road, Wheeling, IL 60090
Telephone (312) 520-9280 Telex 253290

WARRANTY

TAITO AMERICA CORPORATION warrants that its printed circuit boards and parts are free from defects in material and workmanship under nomal use and service for a period of ninety (90) days from the date of shipment. Seller warrants that its monitors are free from defects in material and workmanship under normal use for a period of thirty (30) days from the date of shipment.
The factory also warrants all socketed parts for a period of ninety (90) days when furnished with the game serial number.
If the above products fail to conform to this Warranty Taito America Corporation has the option to repair, replace, or credit the Buyer's account.
The Buyer must notify Taito America Corporation in writing upon finding the defective product. Buyer must also return the defective product prepaid to Taito America Corporation's factory located in Elk Grove Village, Illinois.
If Taito America Corporation determines upon examining the returned product that damage was caused by accident, misuse, neglect, modification, or improper repair or testing, this Warranty will be void.
In no event will Taito America Corporation be held for loss of profits to Buyer.

CHARACTERISTICS/FEATURES:

* Wide screen:
  The play-field is 3 times larger than that of conventional video games! It presents authentic space fighting that has never been experienced in other games.

* A variety of unique enemy characters:
  25 different enemy characters in the air.
  25 different enemy characters on the ground.
  26 different huge fish-like battleships awaits the player at the end of each pattern.

* New power-up systems:
  There are 24 steps to increase your power (each of air-to-air and air-to-ground attacks and defense).

* Different options present a maltitude of variations during the game:
  After the player destroys a huge battleship, the choice of the next course is his discretion.

HOW TO PLAY:

* The first player controls a red battleplane (PROCO).
  The second player controls a blue battleplane (TIAT).

* 8 way joystick — controls the movements of the player's battleplane
  Missile button — for mid-air combat
  Bomb button — for on-land combat

* A power-up-unit emerges when certain enemies are destroyed. Pick up the power-up-unit. The type of power-up varies according to the color of the power-up-unit.
  red power-up-unit — increases the destructiveness of player's missiles
  green power-up-unit — increases the destructiveness of player's bombs
  blue power-up-unit — increases the player's defensive strength
  (Note: There are 24 levels for each type power-up. The effect lasts until the game-over.)

* When the player advances to certain points in the game, a huge fish-like enemy battleship appears. There are 26 types of battleships and each type has its own weak points.

* Whenever a huge enemy battleship is destroyed, the player can choose the next zone.

* Basically there are 5 types of zones: (1) space cave, (2) city, (3) mountains, (4) Van Allen radiation belt, (5) under ocean water base.

* The player loses a battleplane when hitting an (1) enemy, (2) rock, or (3) building.

* When all battleplanes are lost or the final zone is cleared, the game is over.

* If the player's score ranks within the top 100, he can register his initials.

* When 2 players are playing and one player ends his game he can continue by inserting another coin and pressing the start button.

ADJUSTMENT ON GAME PC BOARD

(NOTE) BEFORE CHANGING THE SETTINGS OF THE DIP SWITCH, TURN THE POWER OFF.

SETTING OF DIP SWITCH A

SETTING		1	2	3	4	5	6	7	8
TURBO (RAPID FIRE)	*WITHOUT WITH		OFF ON						
TEST MODE	*NORMAL GAME TEST MODE			OFF ON					
ATTRACT SOUND	*PRODUCED NOT PRODUCED				OFF ON				
PLAY PRICING (COIN A)	* I COIN I PLAY I COIN 2 PLAYS 2 COINS I PLAY 2 COINS 2 PLAYS	OFF				OFF ON OFF ON	OFF ON		
PLAY PRICING (COIN B)	* I COIN I PLAY I COIN 2 PLAYS 2 COINS I PLAY 2 COINS 3 PLAYS							OFF ON OFF ON	OFF ON

SETTING OF DIP SWITCH B

SETTING		1	2	3	4	5	6	7	8
GAME DIFFICULTY Easy A Difficult D	*RANK B RANK A RANK C RANK D	OFF ON OFF ON	OFF ON						
BONUS POINTS 1st &2nd every	*600,000 Pts. (600,000)Pts. 800,000 Pts. NO BONUS			OFF ON OFF ON	OFF ON			OFF	
NUMBER OF PLAYERS	*3 4 5 6					OFF ON OFF ON	OFF ON		
CONTINUED PLAY	*WITH WITHOUT								OFF ON

GAME INSPECTION

Examine external cabinet for chips, dents or broken parts.

Open rear access door and check:
- Plug-in connectors to see that they are firmly seated.
- Speaker connections.
- All player control connections.
- For loose components on P.C. boards.
- Fuses, making sure they are firmly in holders.
- Coin mechanisms.
- For loose foreign objects, especially metal,screws or parts which might cause electrical problems.

If problems occur or technical assistance is required, contact our customer service department at (312) 520-9280.

POWER REQUIREMENTS

The game is shipped ready for operation at 120VAC,60Hz with a power consumption of approximately 250 watts, foreign shipped games operate at 220VAC 50Hz.

CAUTION

FOR SAFE OPERATION IT IS RECOMMENDED THE CABINET BE GROUNDED. THIS GAME IS EQUIPPED WITH A THREE CONDUCTOR POWER CABLE. THE THIRD CONDUCTOR IS THE GROUND CONDUCTOR AND WHEN THE CABLE IS PLUGGED INTO AN APPROPRIATE RECEPTABLE, THE GAME IS GROUNDED. THE OFFSET PIN ON THE POWER CABLE'S THREE-PRONG CONNECTOR IS THE GROUND CONNECTION

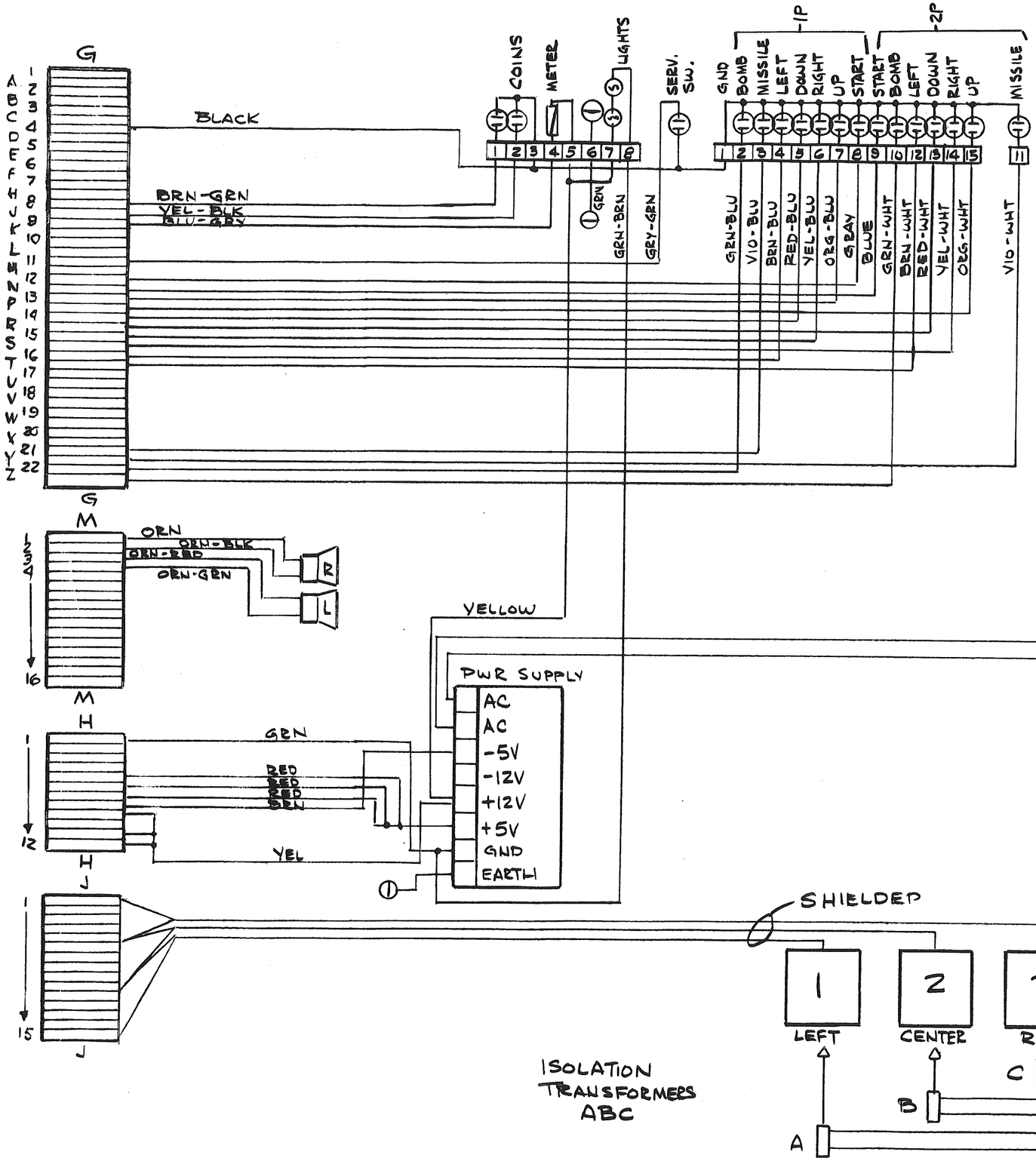

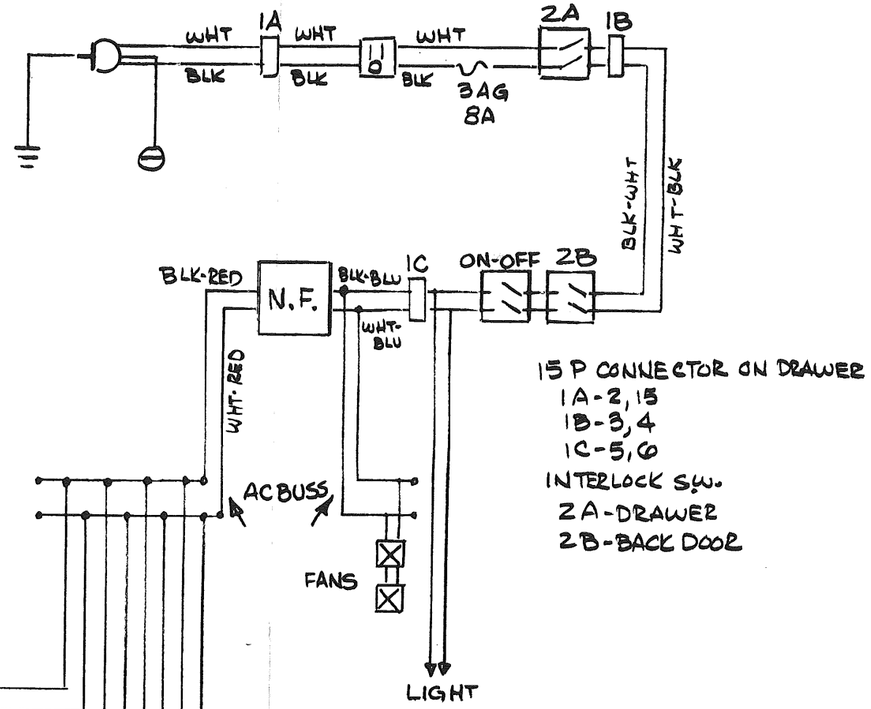

WIRING DIAGRAM

CPU SCHEMATIC

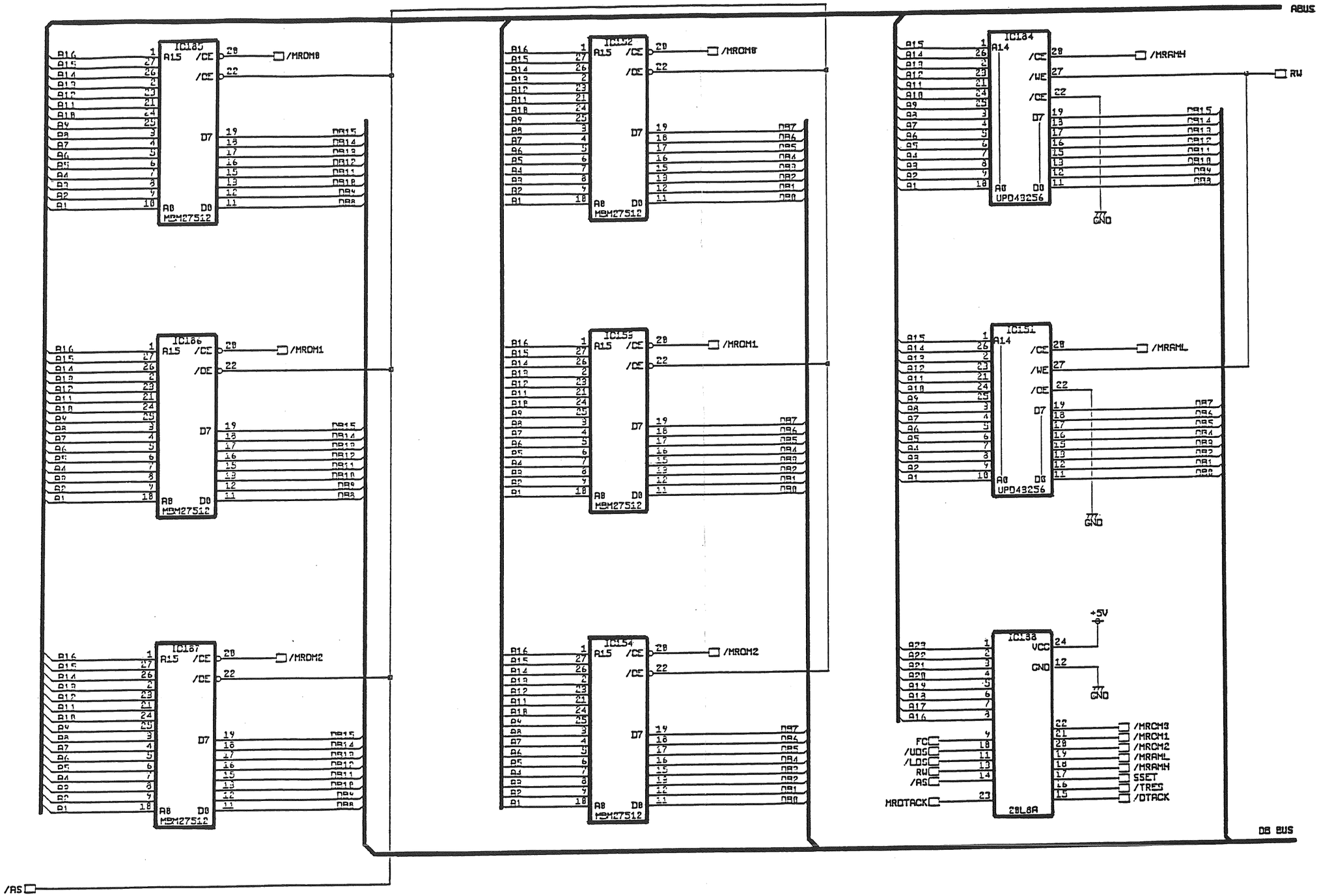

CPU SCHEMATIC

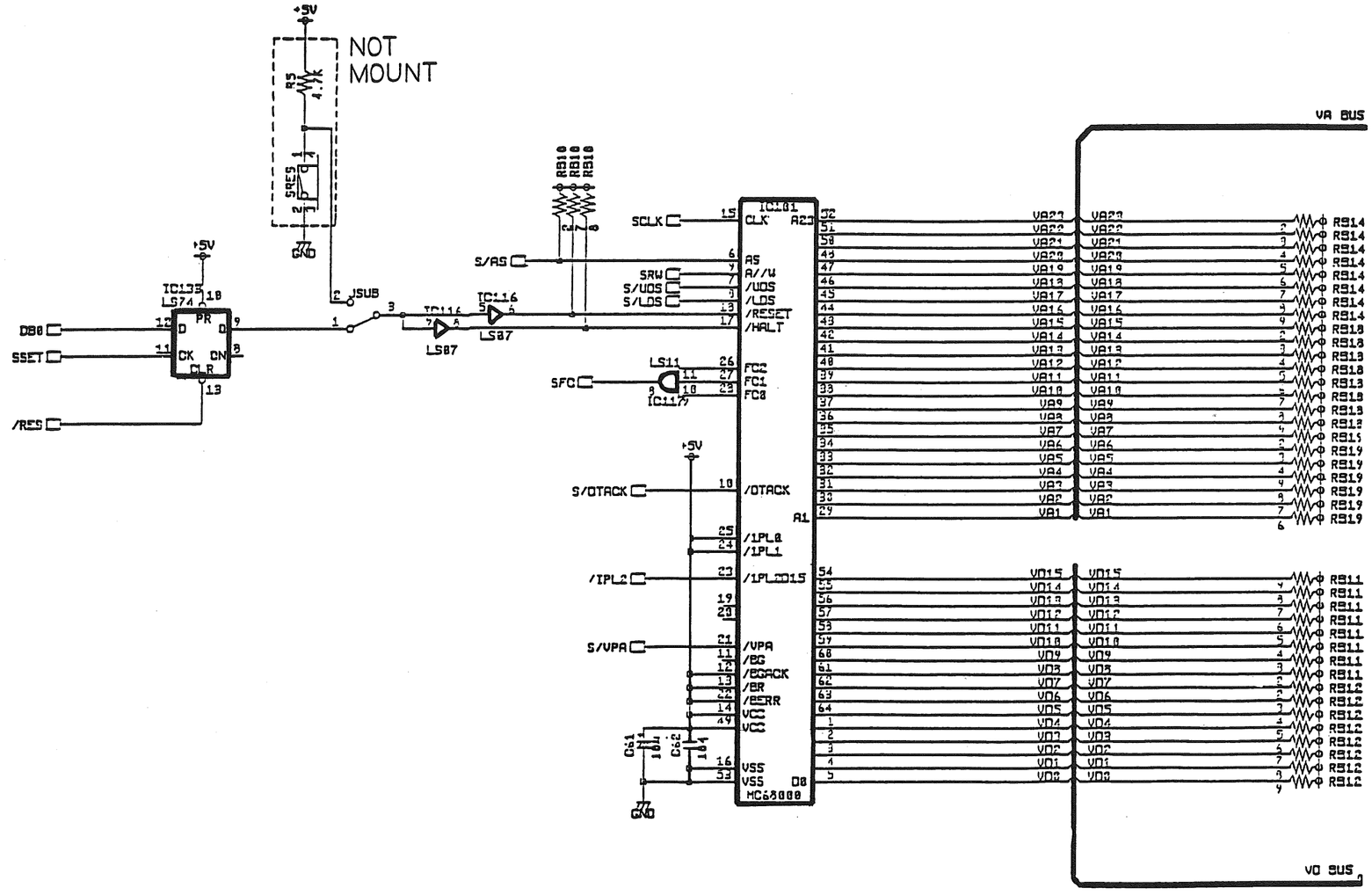

CPU SCHEMATIC

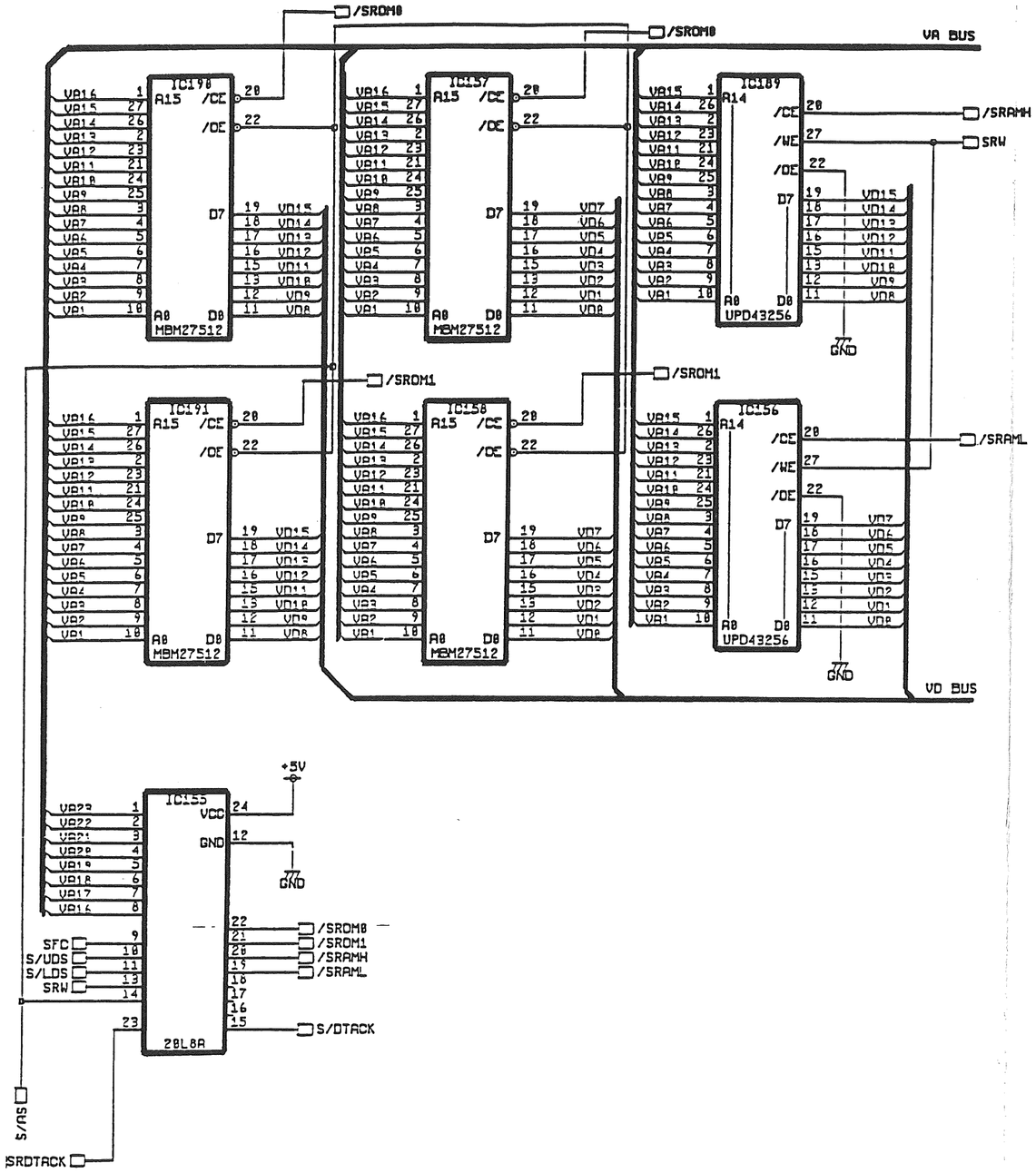

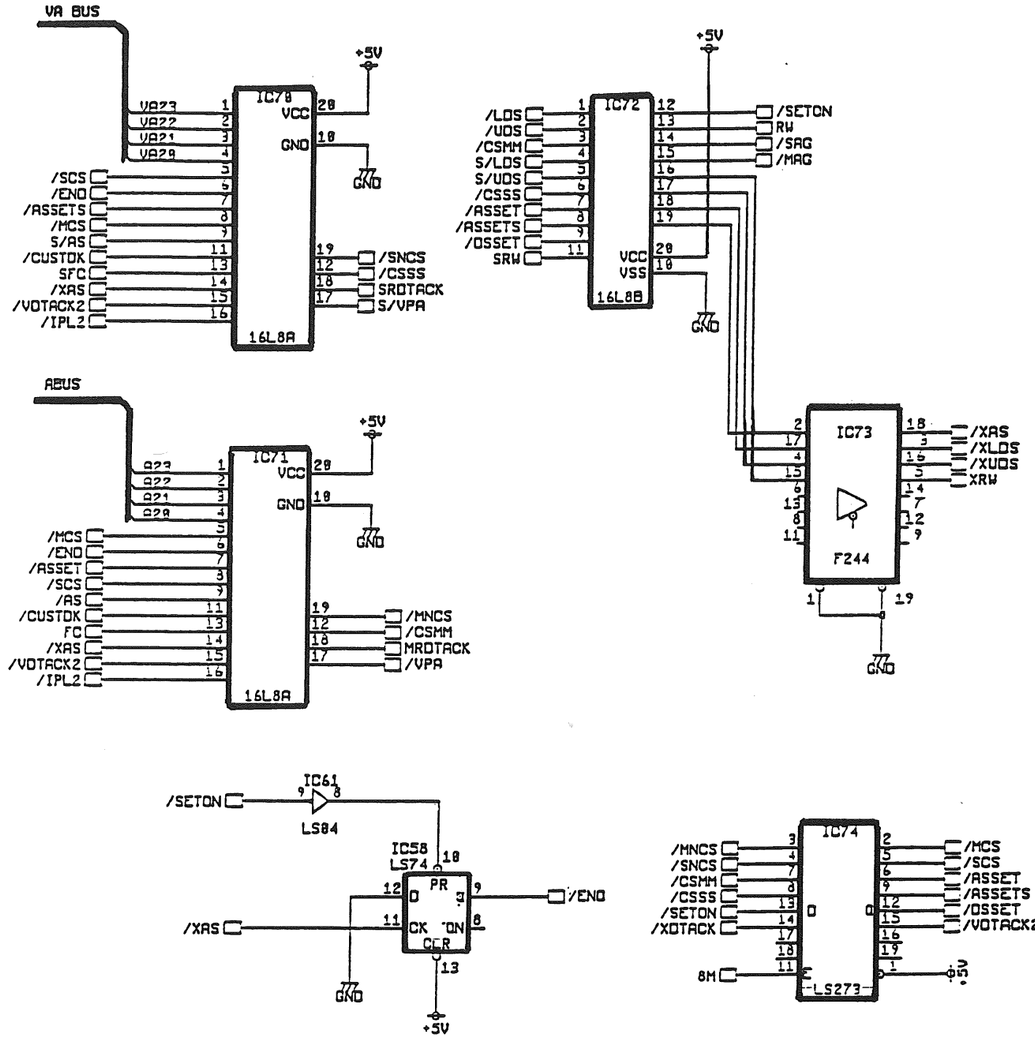

CPU SCHEMATIC

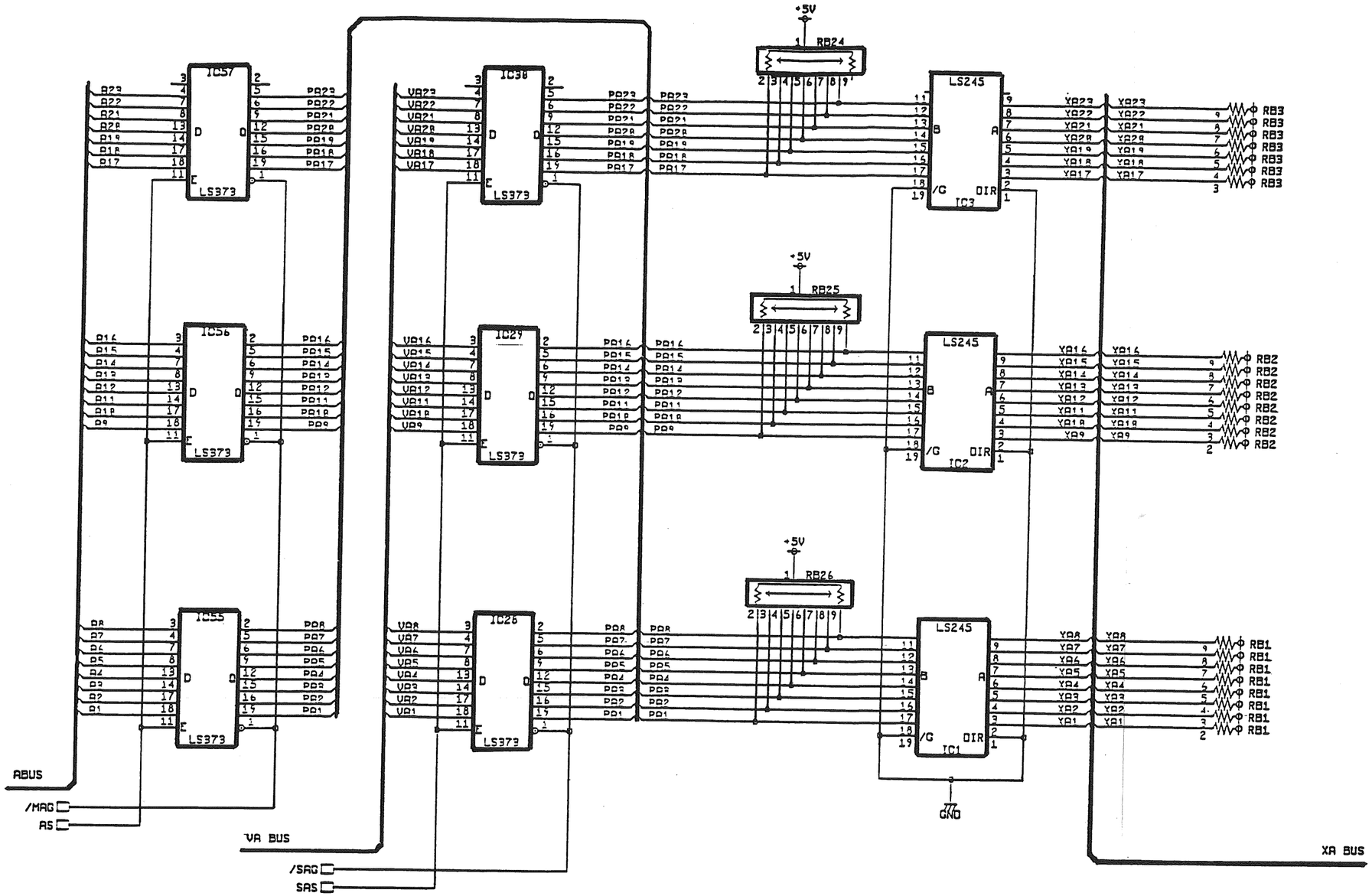

CPU SCHEMATIC

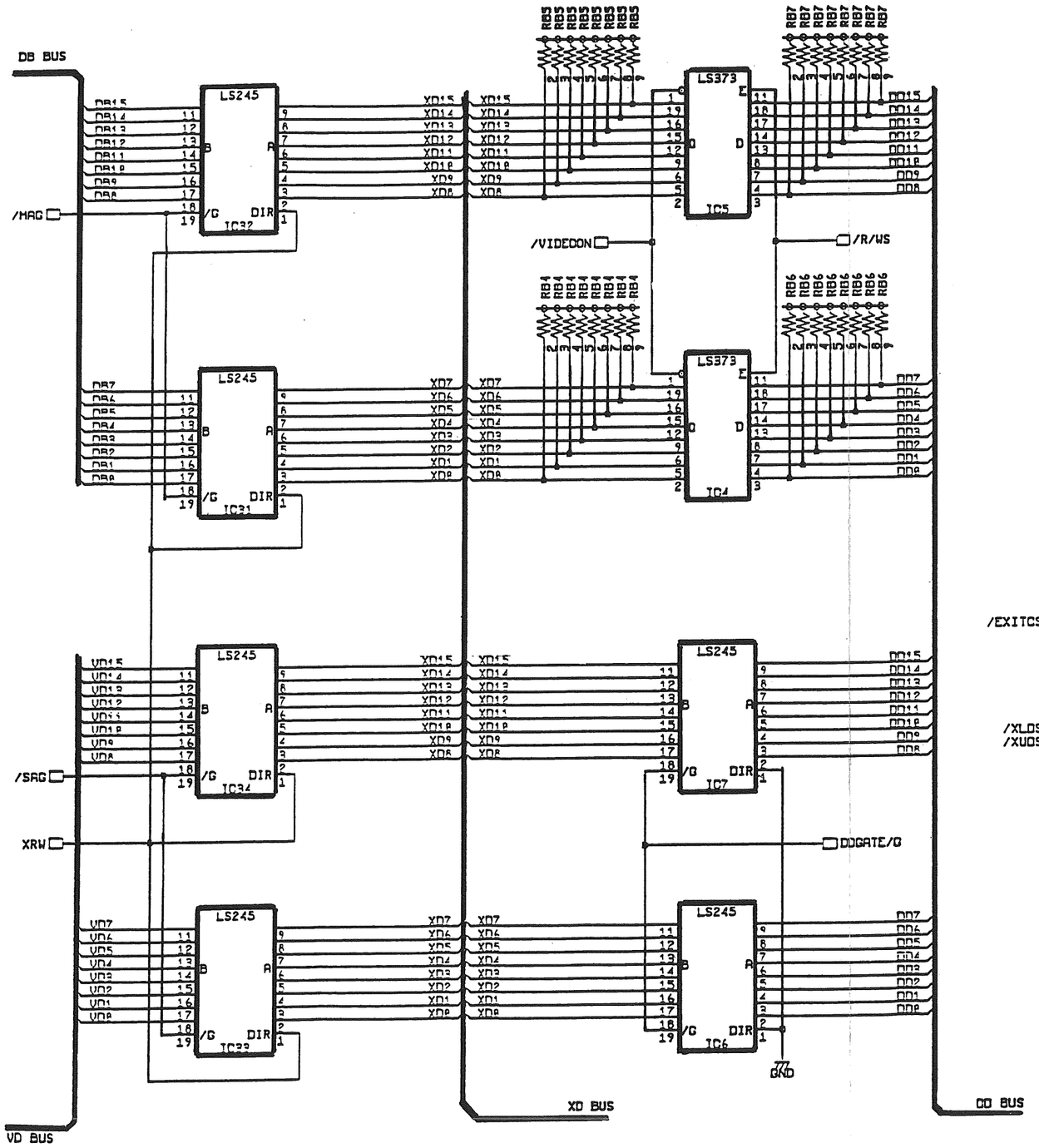

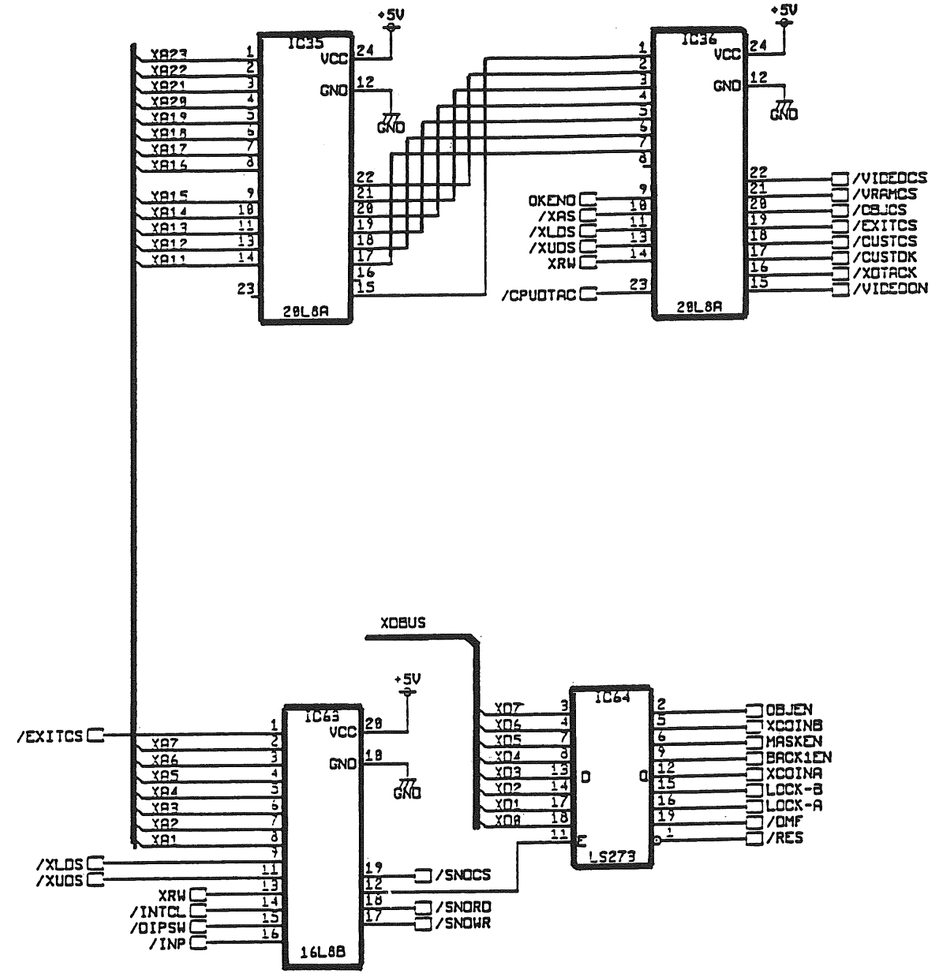

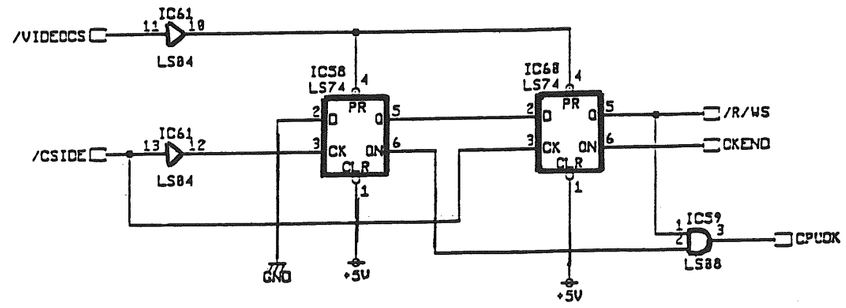

CPU SCHEMATIC

CPU SCHEMATIC

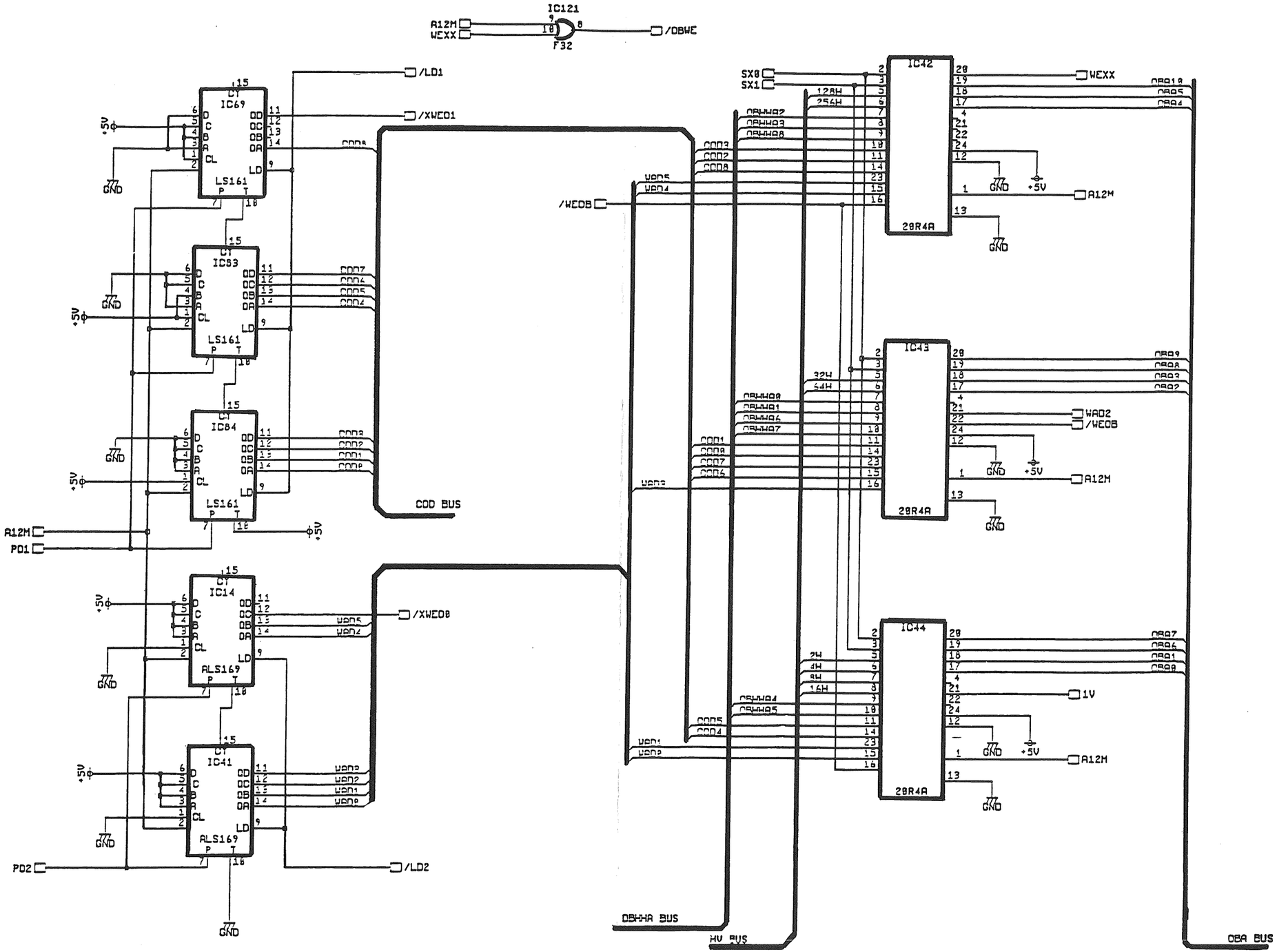

CPU SCHEMATIC

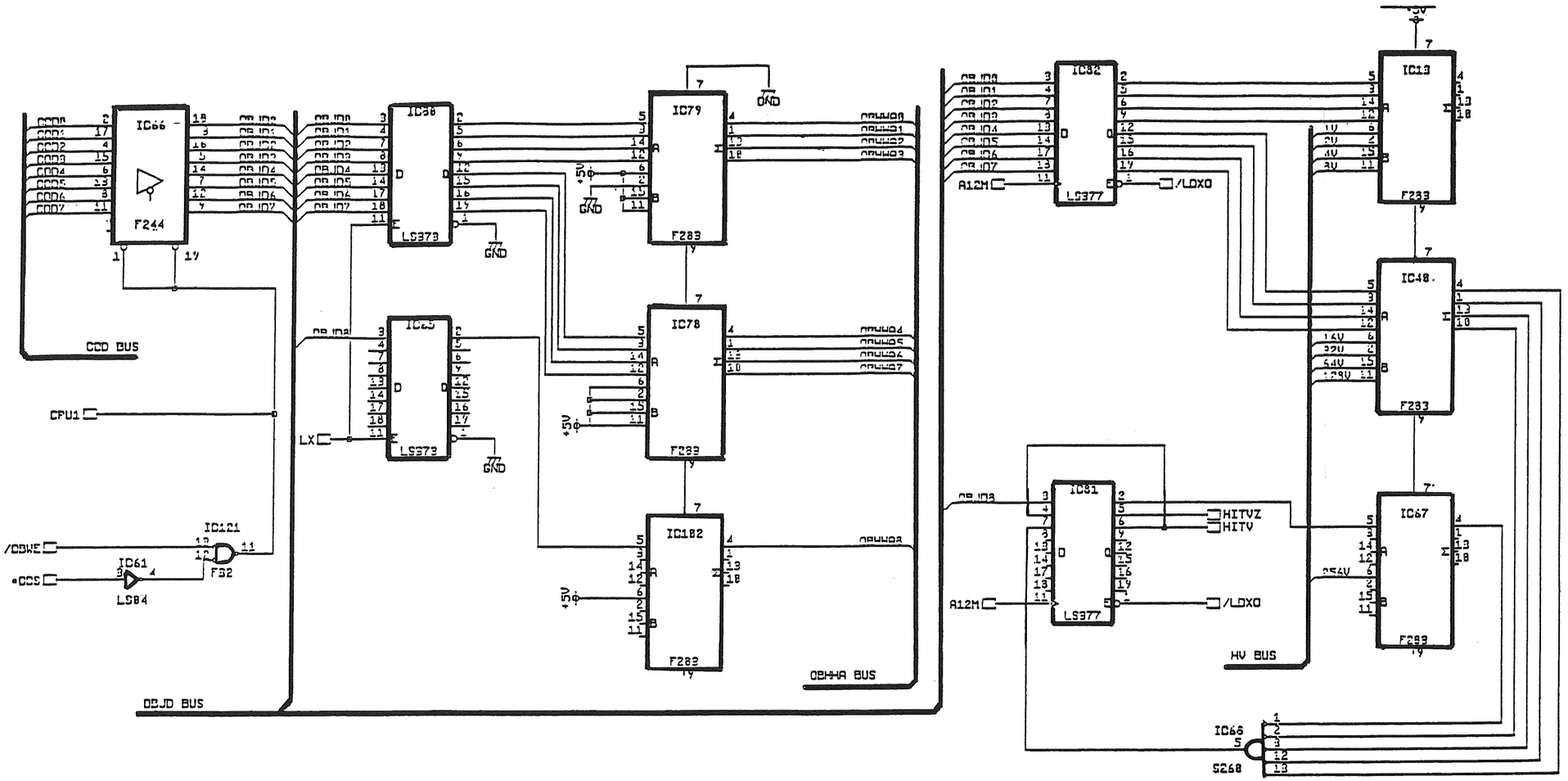

CPU SCHEMATIC

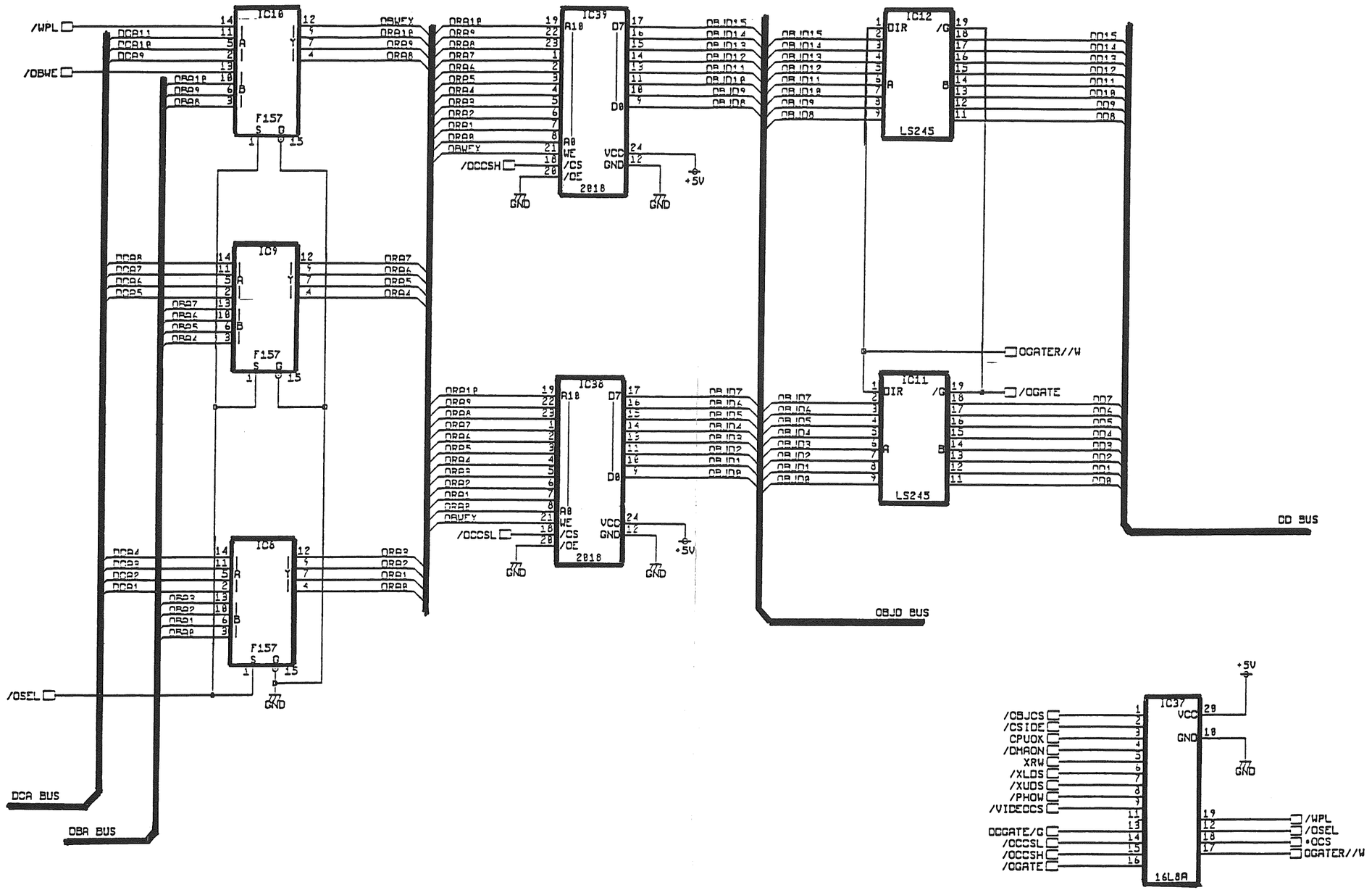

CPU SCHEMATIC

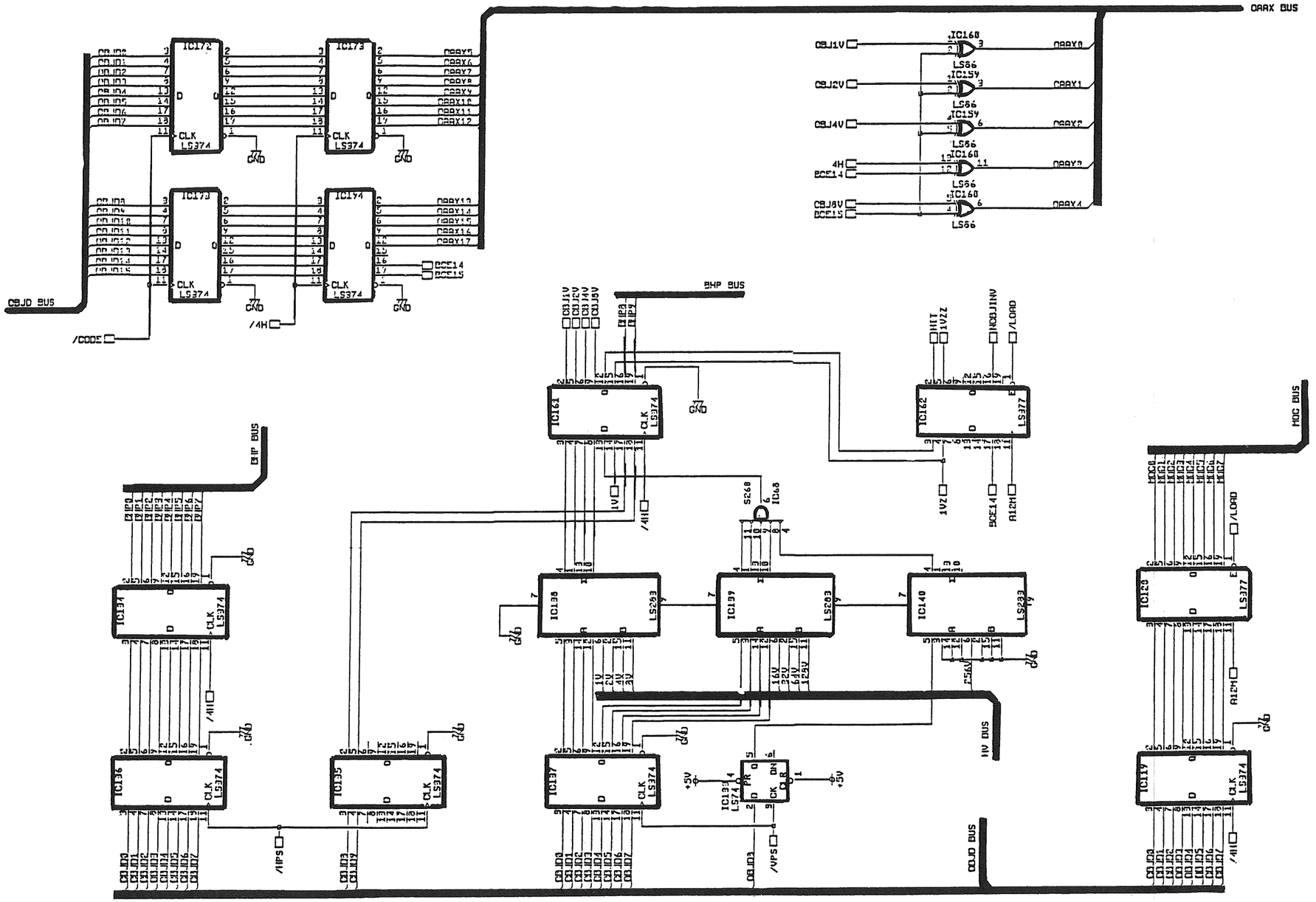

CPU SCHEMATIC

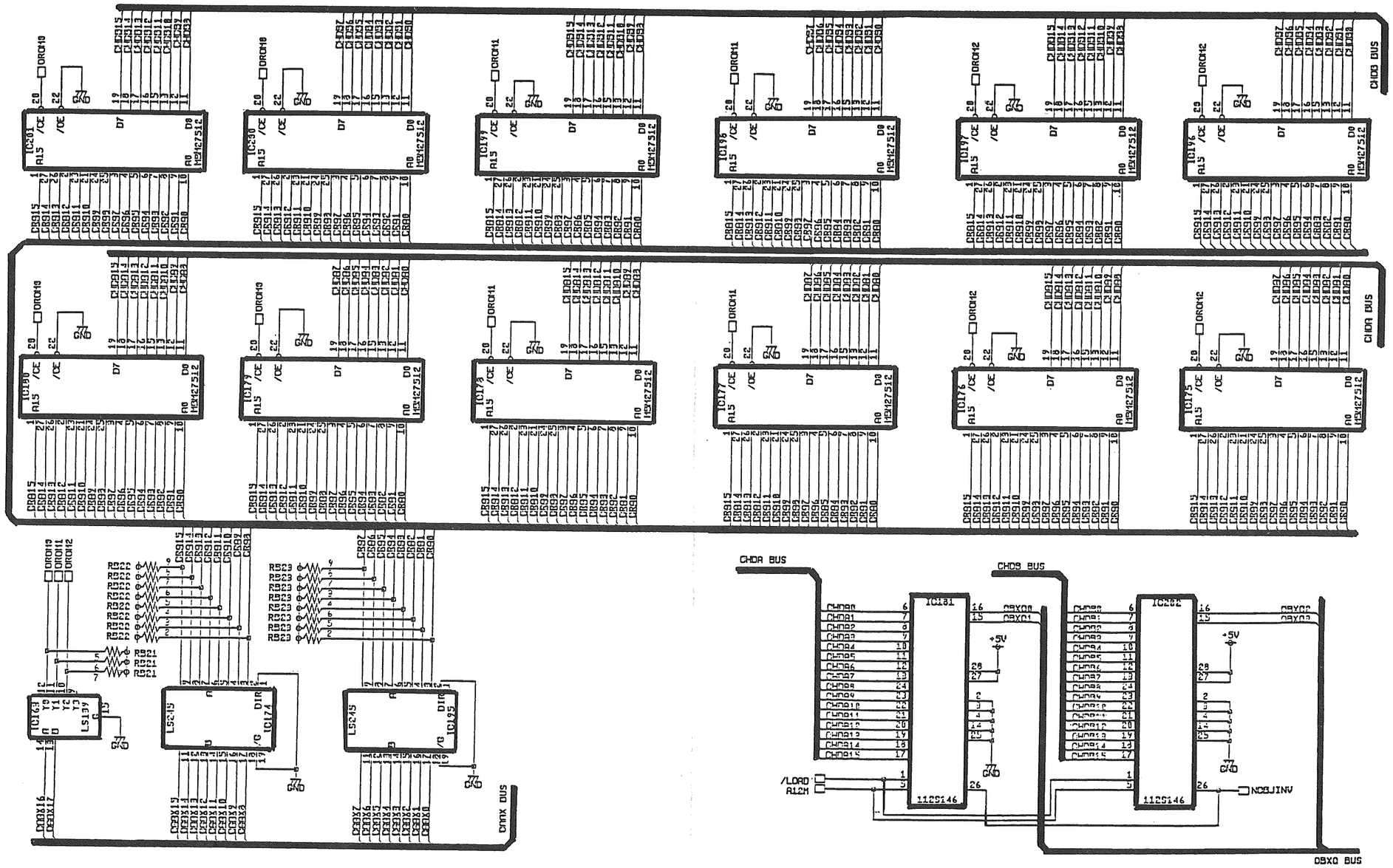

CPU SCHEMATIC

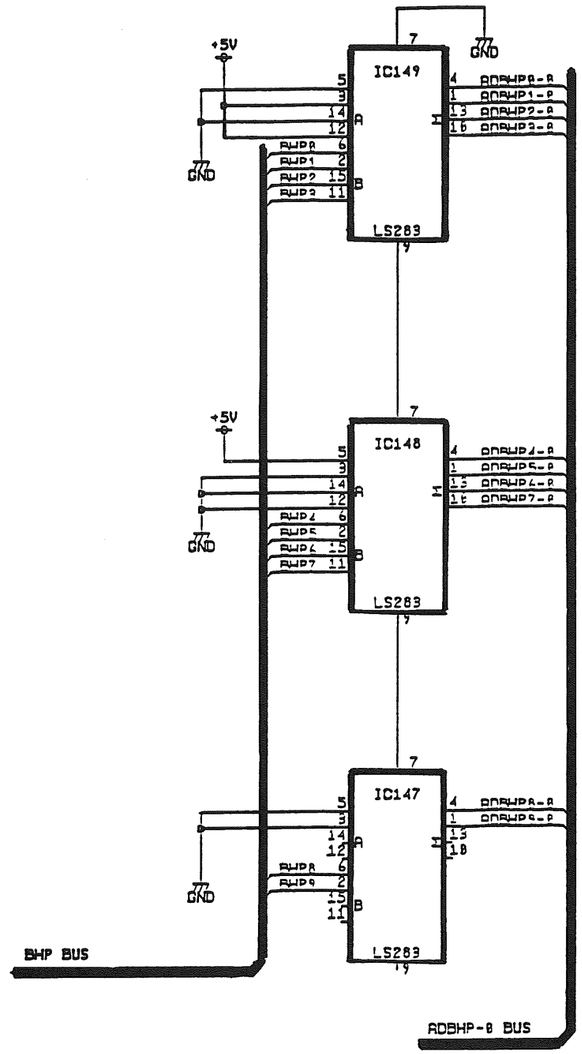

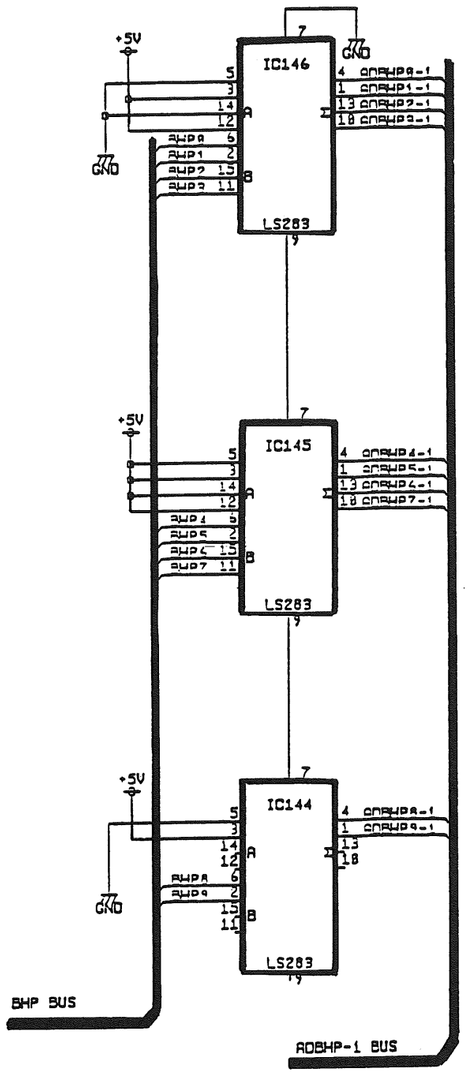

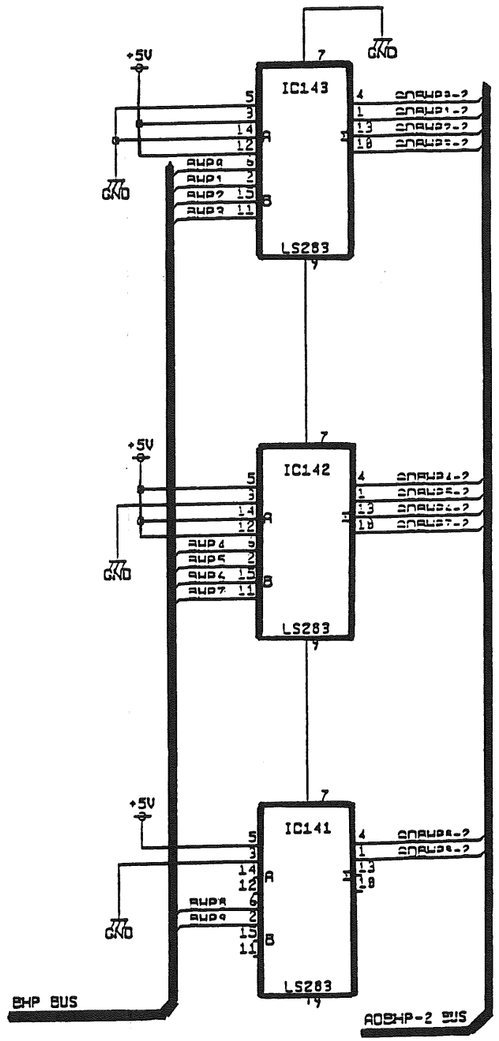

CPU SCHEMATIC

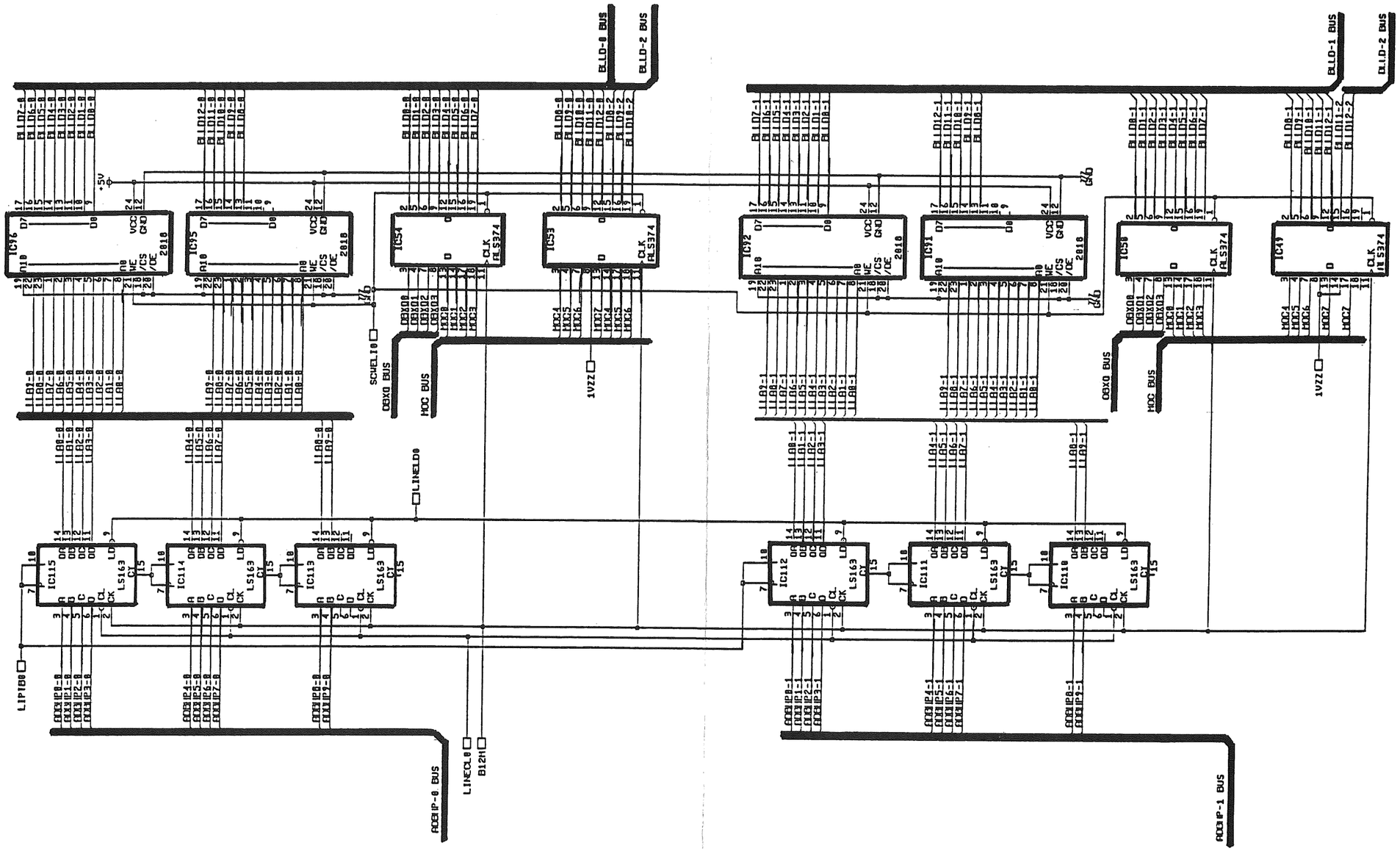

CPU SCHEMATIC

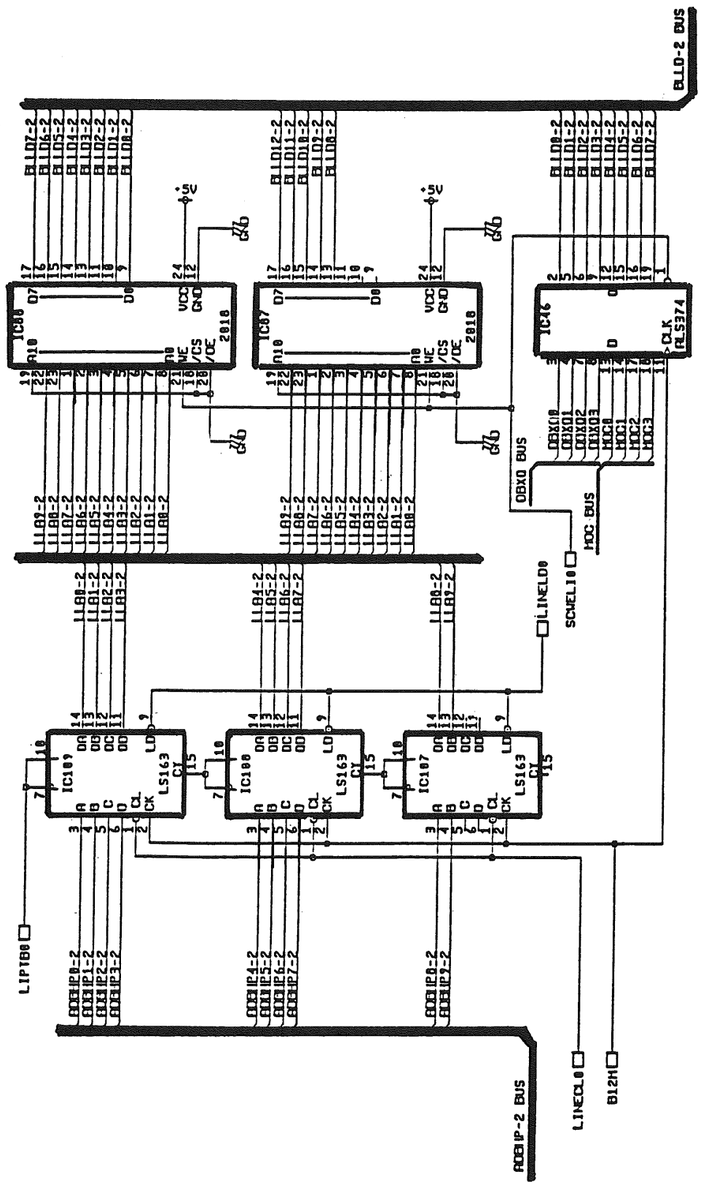

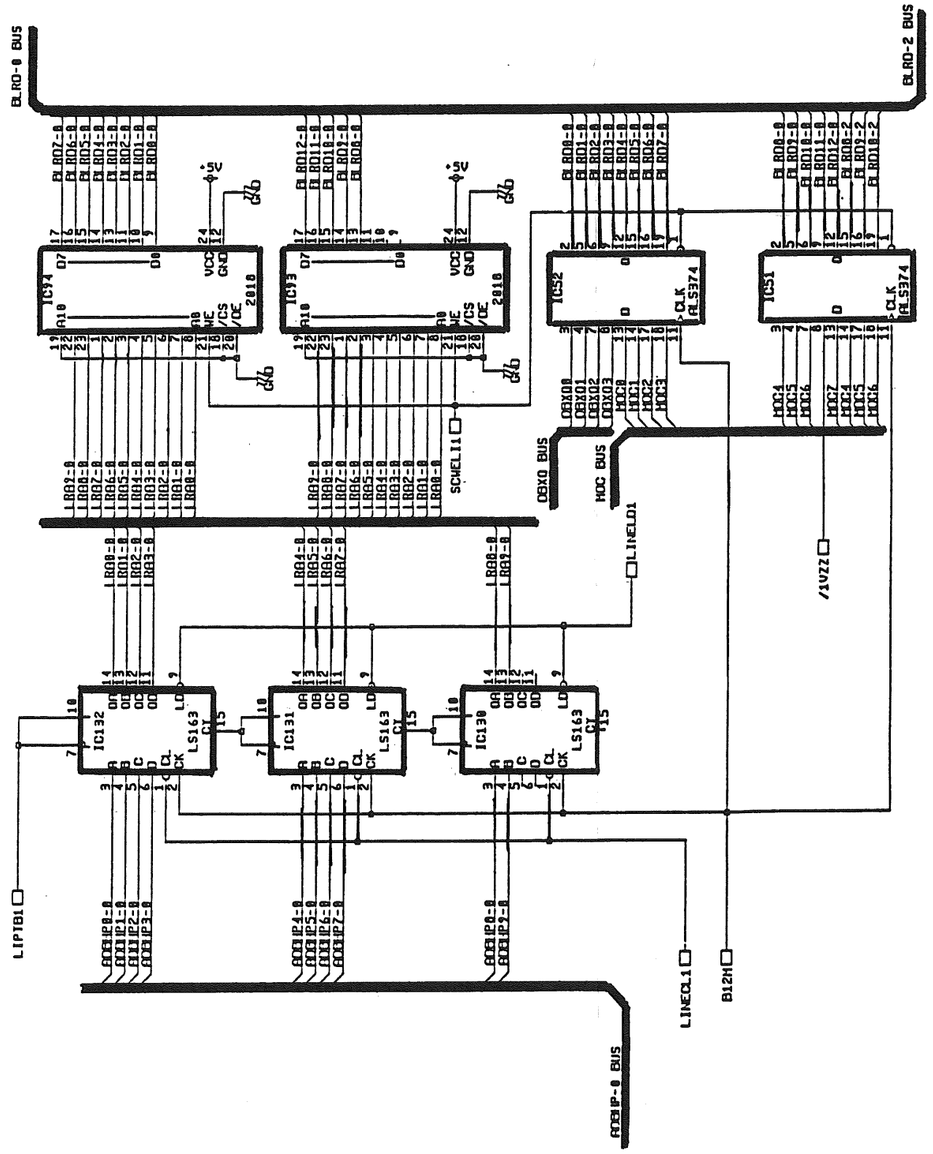

CPU SCHEMATIC

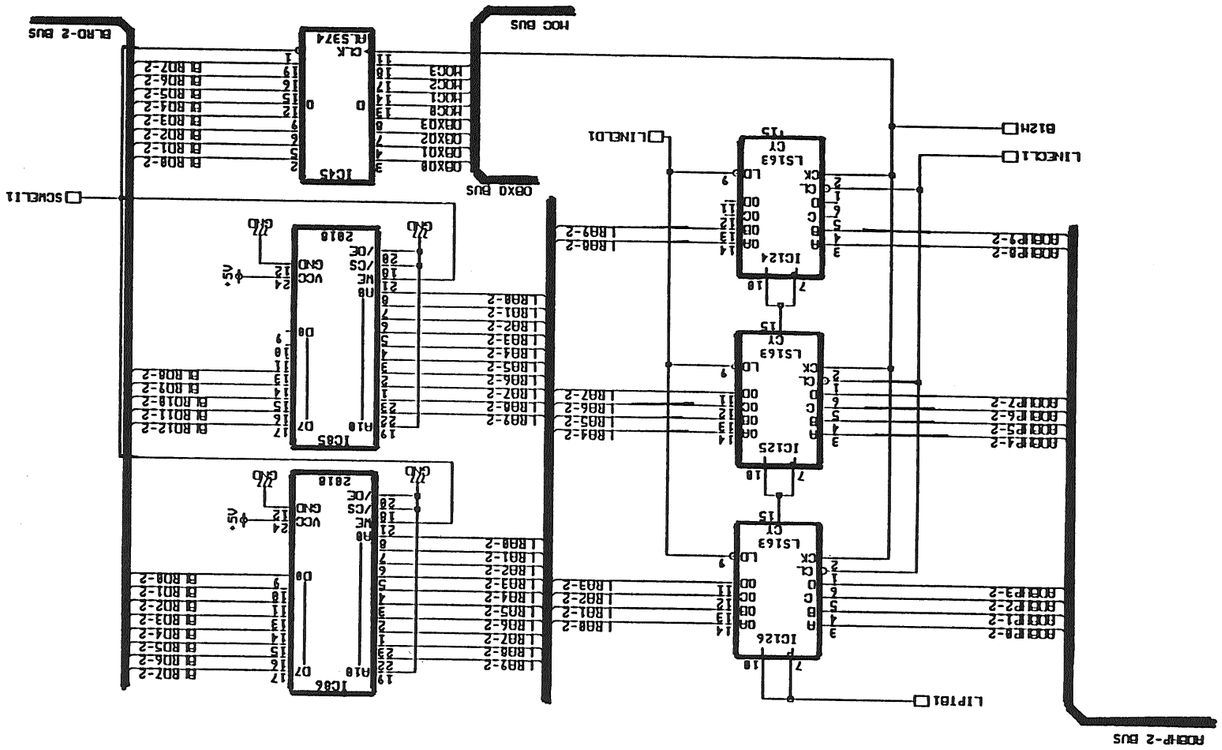

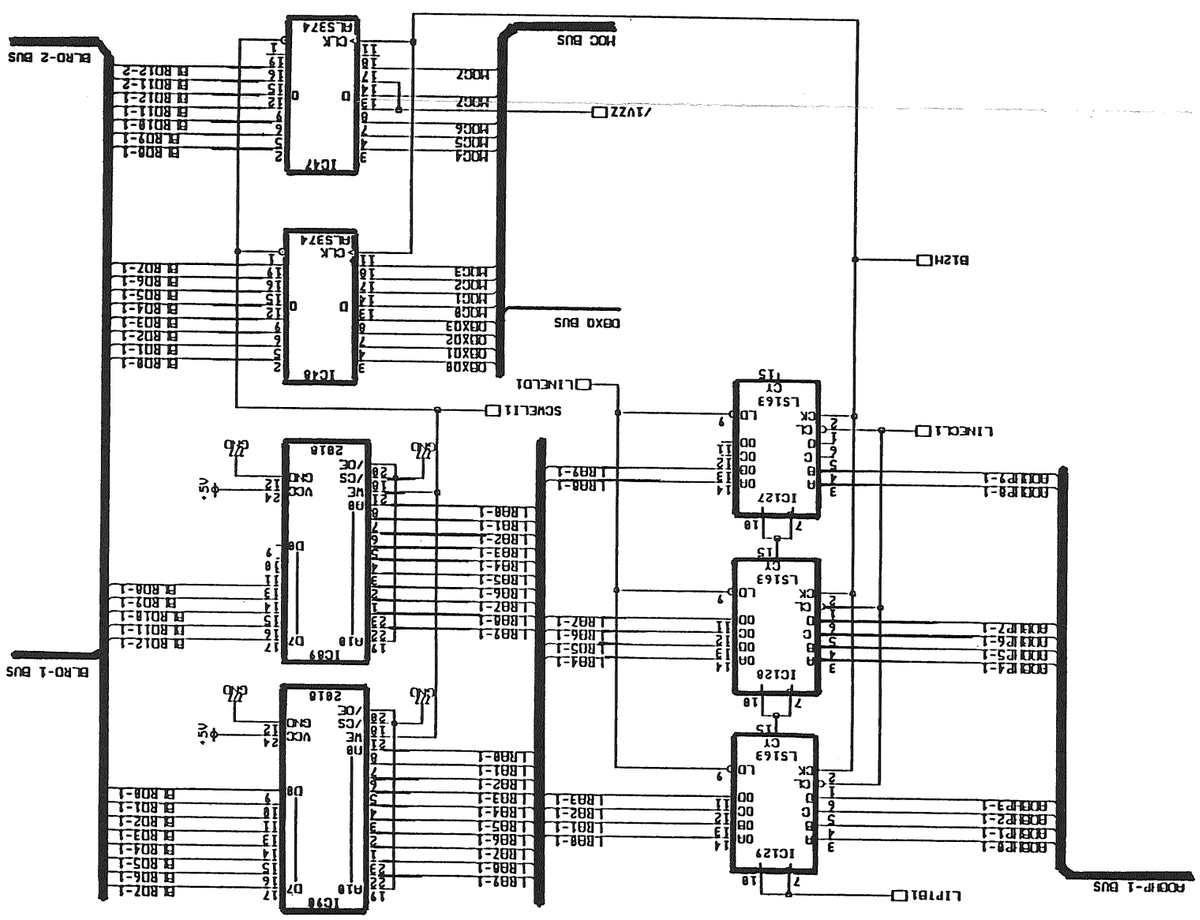

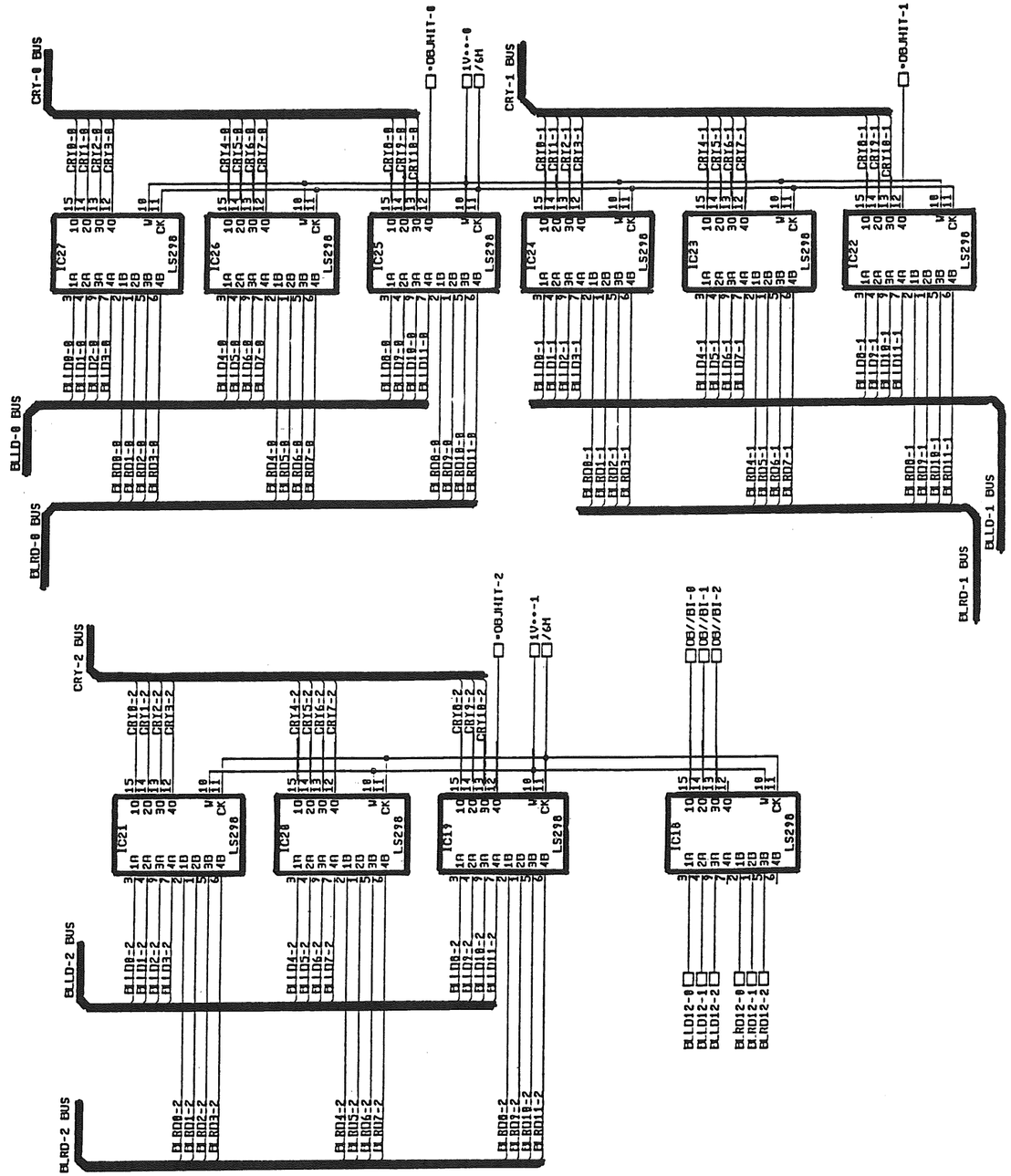

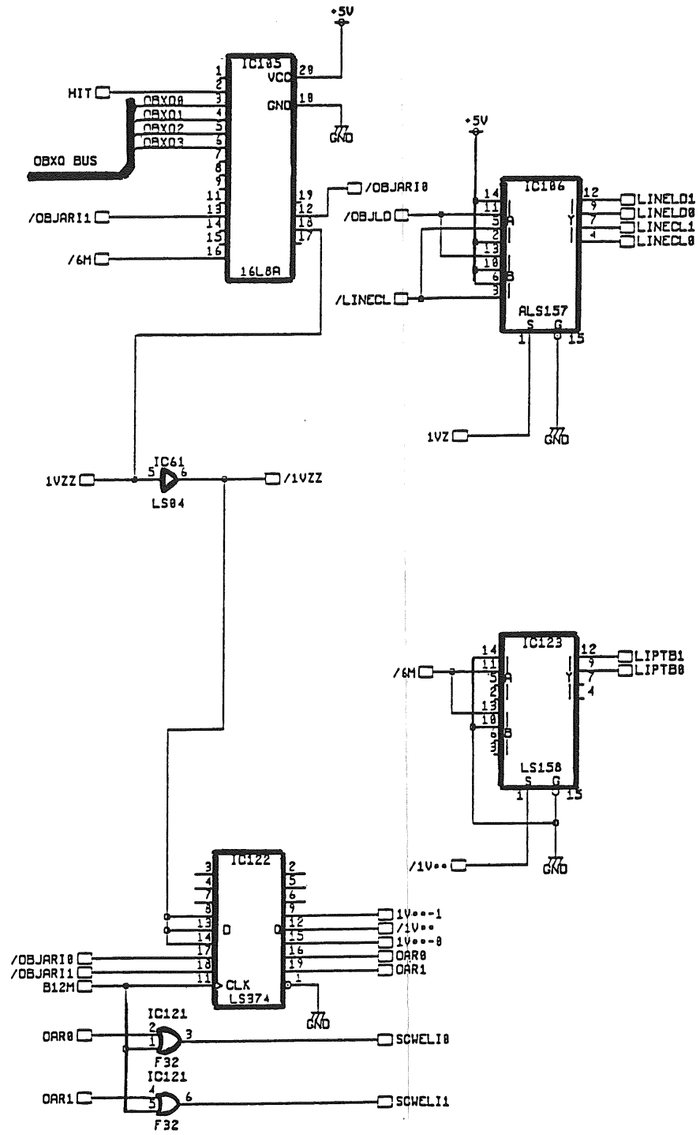

CPU SCHEMATIC

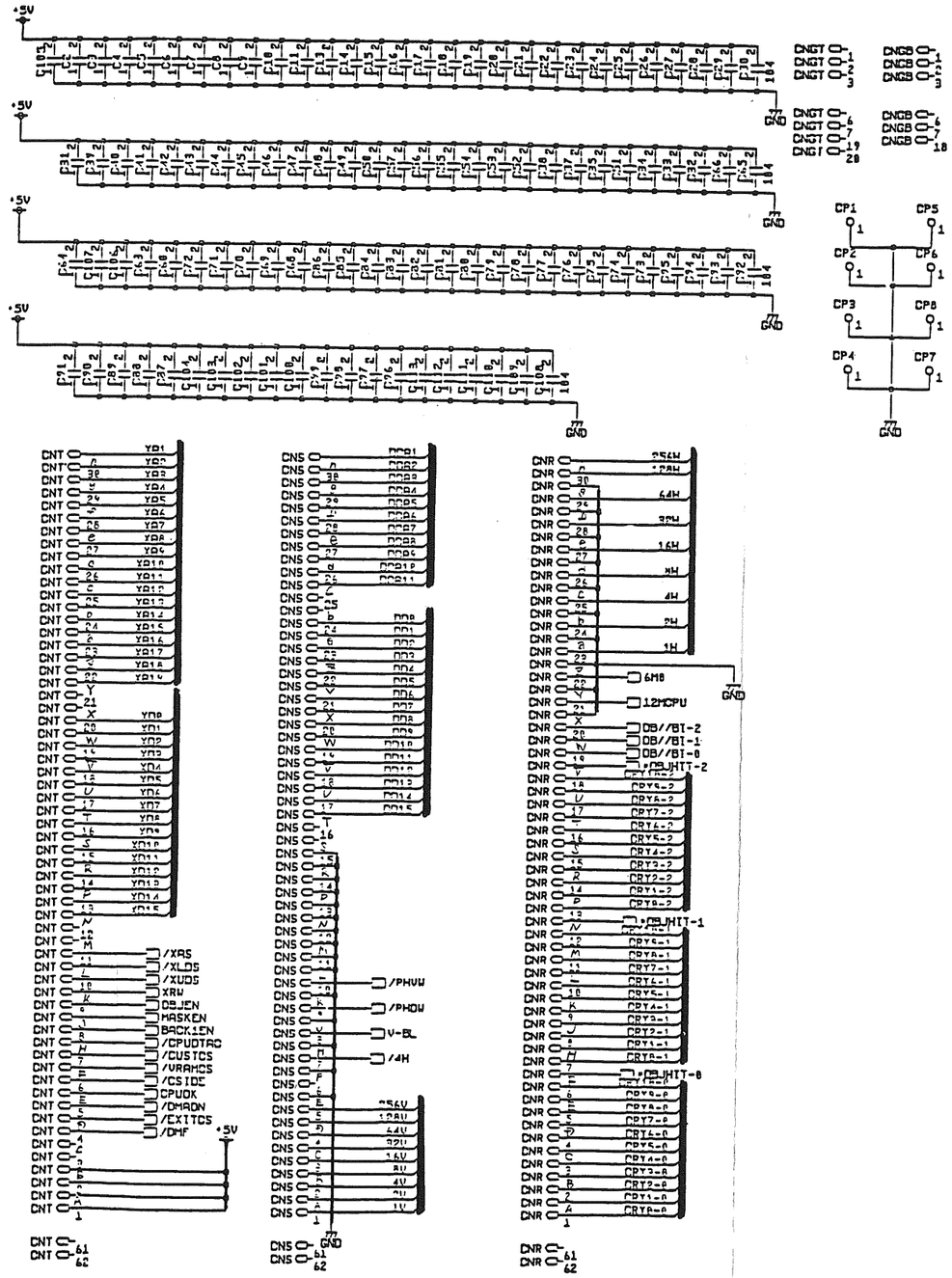

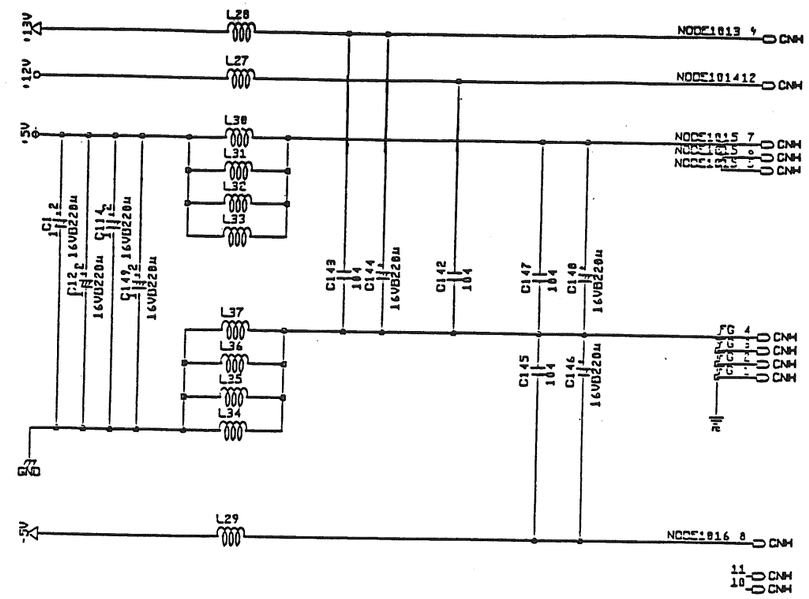

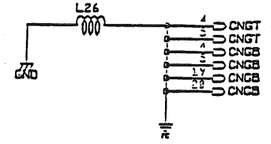

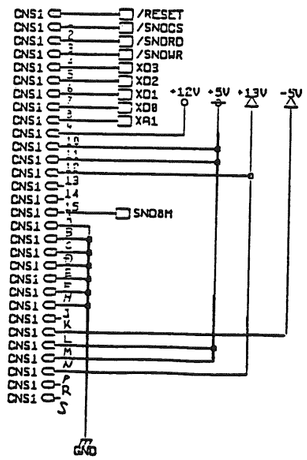

CPU SCHEMATIC

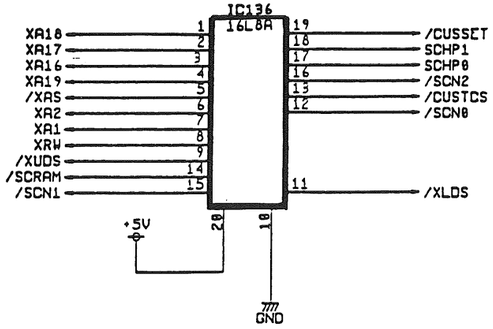
IC136
16L8A
XA18
XA17
XA16
XA19
/XAS
XA2
XA1
XRW
/XUDS
/SCRAM
/SCN1
/CUSSET
SCHP1
SCHP0
/SCN2
/CUSTCS
/SCN0
/XLDS
+5V
GND

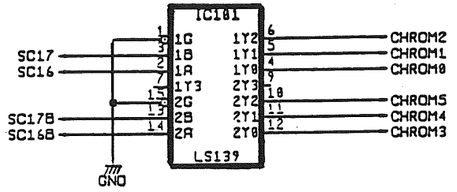
IC101
SC17
SC16
SC17B
SC16B
CHROM2
CHROM1
CHROM0
CHROM5
CHROM4
CHROM3
LS139
GND

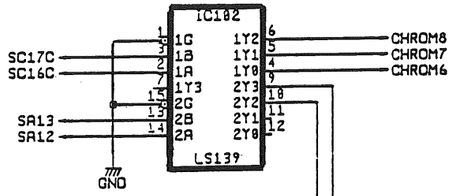
IC102
SC17C
SC16C
SA13
SA12
CHROM8
CHROM7
CHROM6
LS139
GND

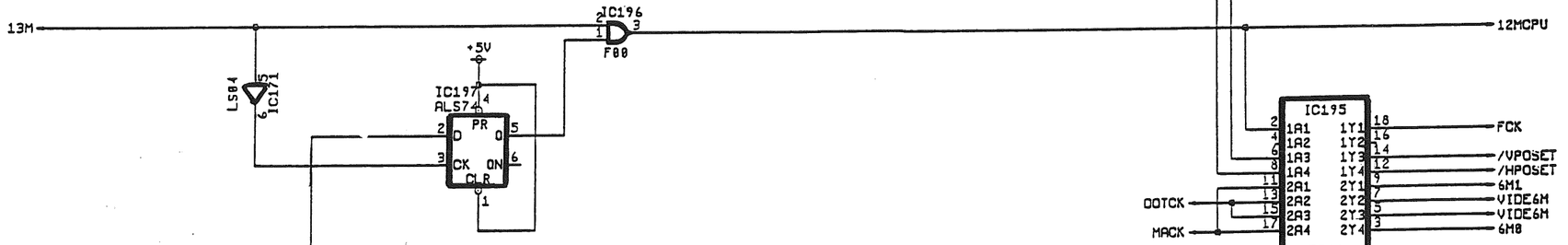
13M
IC196
F00
12MCPU
LS04
IC171
+5V
IC197
ALS74
PR
D
Q
CK
QN
CLR
IC195
1A1
1A2
1A3
1A4
2A1
2A2
2A3
2A4
1Y1
1Y2
1Y3
1Y4
2Y1
2Y2
2Y3
2Y4
F244
/1G
/2G
DOTCK
MACK
FCK
/VPOSET
/HPOSET
6M1
VIDE6M
VIDE6M
6M0
GND

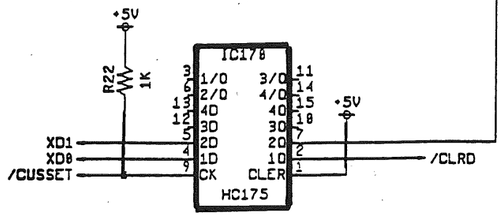
+5V
R22
1K
IC178
1/D
2/D
3/D
4/D
1Q
2Q
3Q
4Q
CK
CLER
HC175
XD1
XD0
/CUSSET
/CLRD

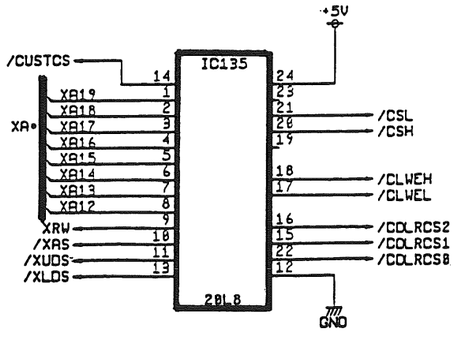
/CUSTCS
XA
XA19
XA18
XA17
XA16
XA15
XA14
XA13
XA12
XRW
/XAS
/XUDS
/XLDS
IC135
20L8
+5V
/CSL
/CSH
/CLWEH
/CLWEL
/CDLRCS2
/CDLRCS1
/CDLRCS0
GND

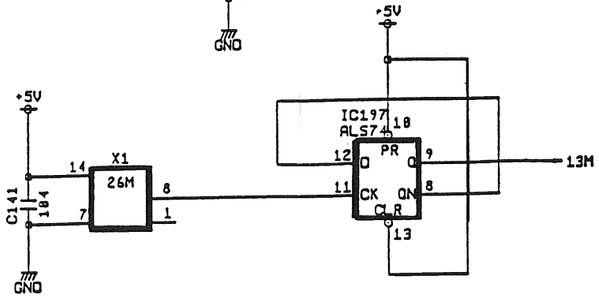
+5V
C141
104
X1
26M
IC197
ALS74
PR
CK
CLR
13M
GND

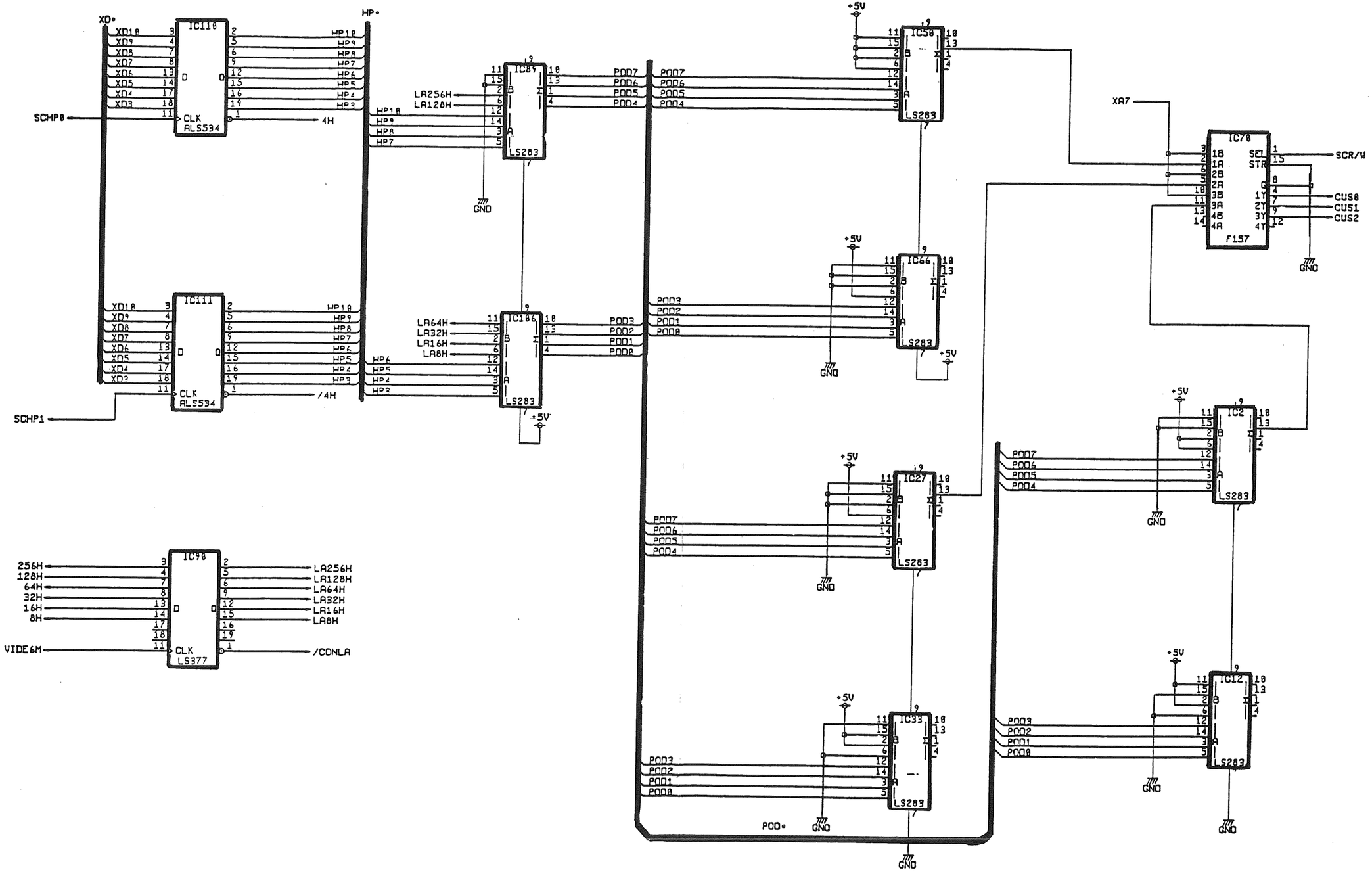

VIDEO PCB SCHEMATIC

VIDEO PCB SCHEMATIC

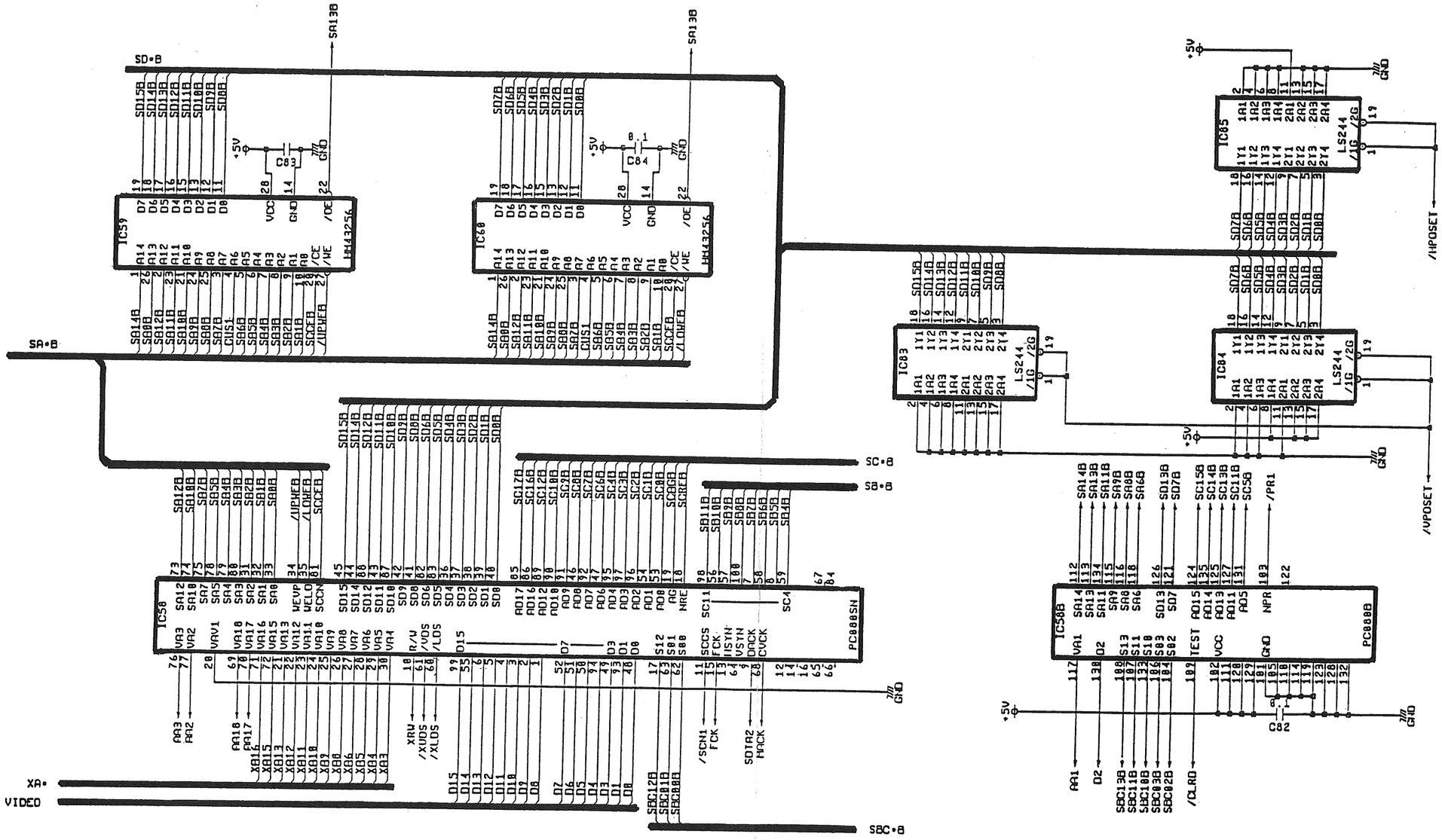

VIDEO PCB SCHEMATIC

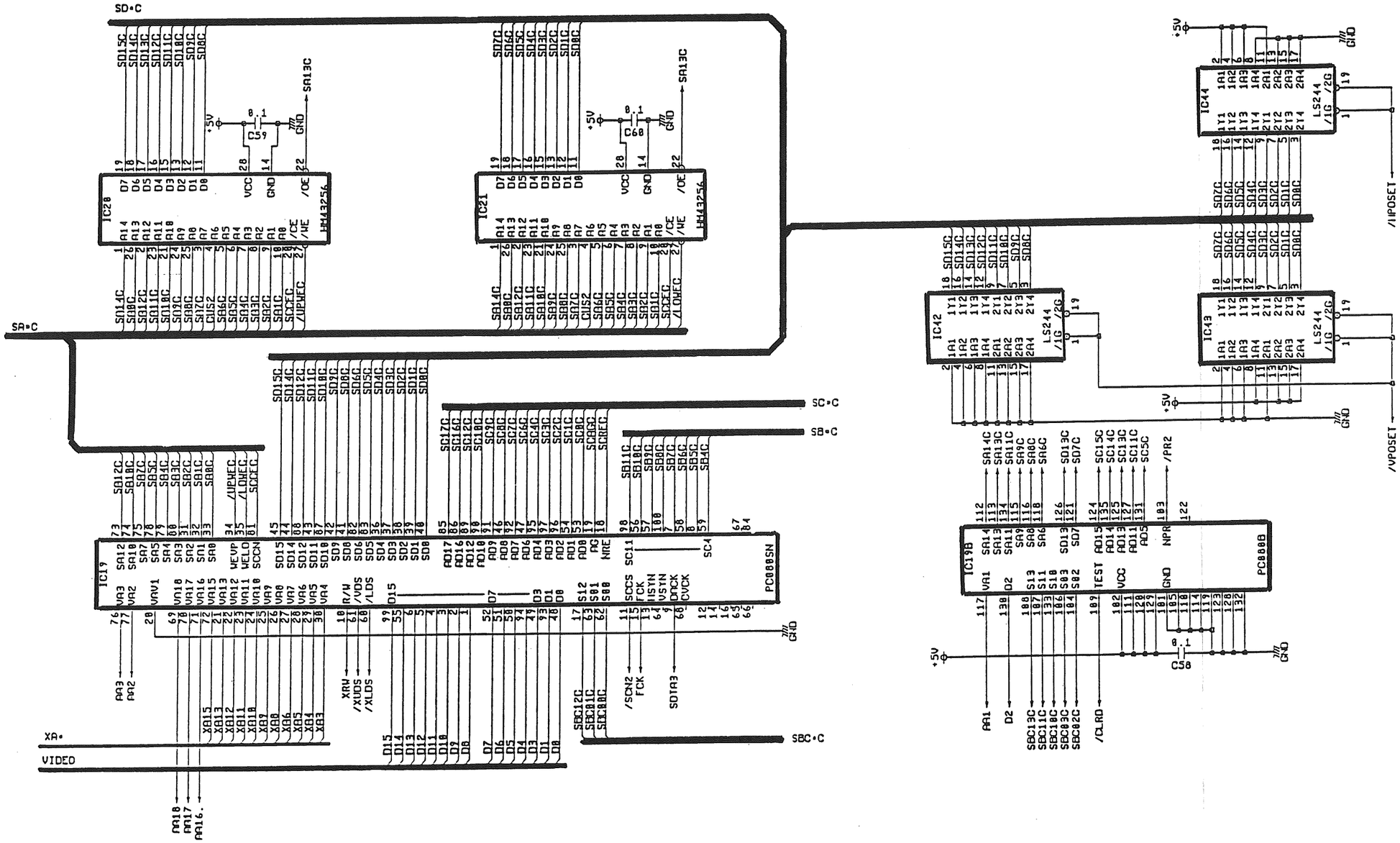

VIDEO PCB SCHEMATIC

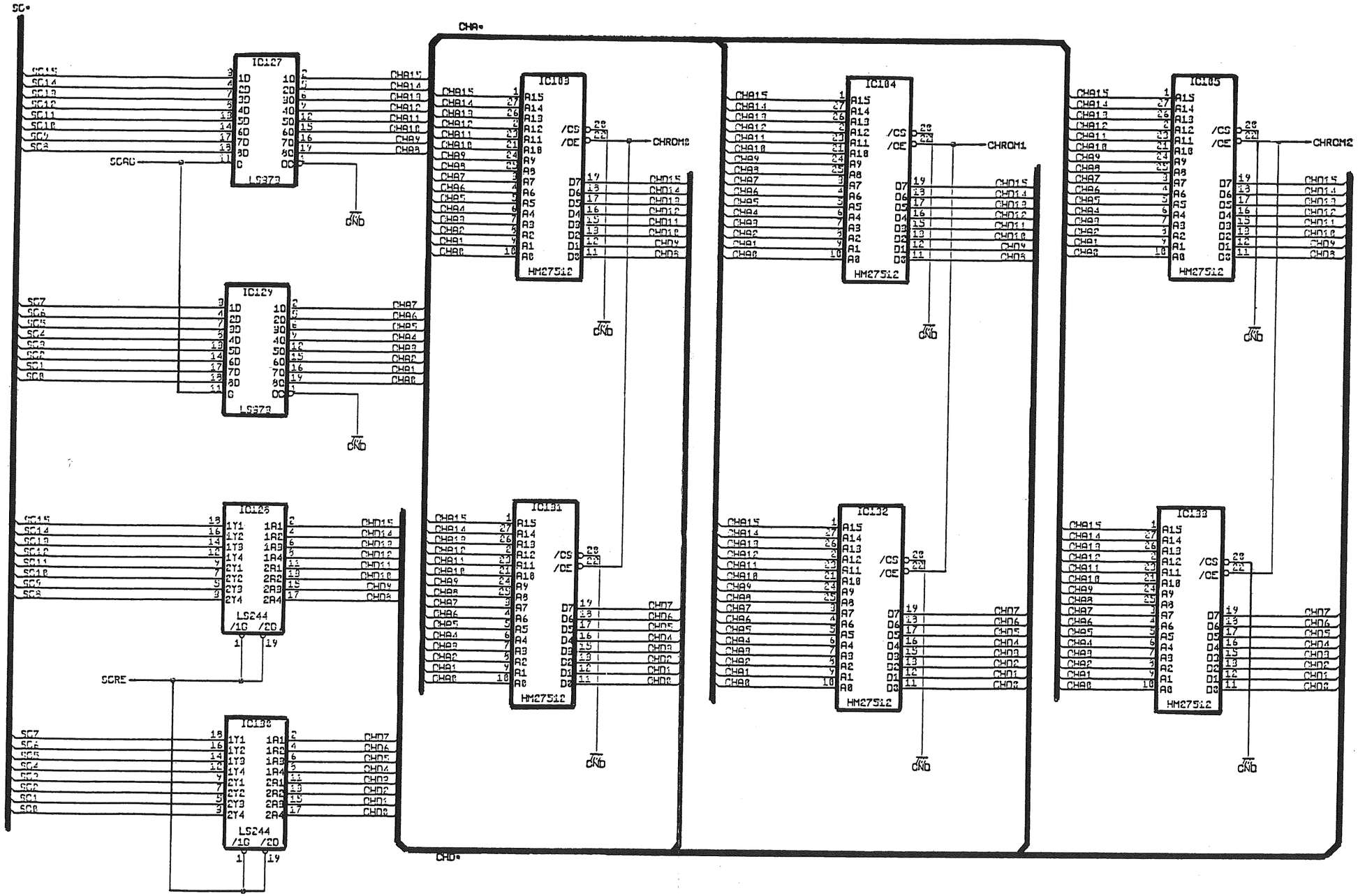

VIDEO PCB SCHEMATIC

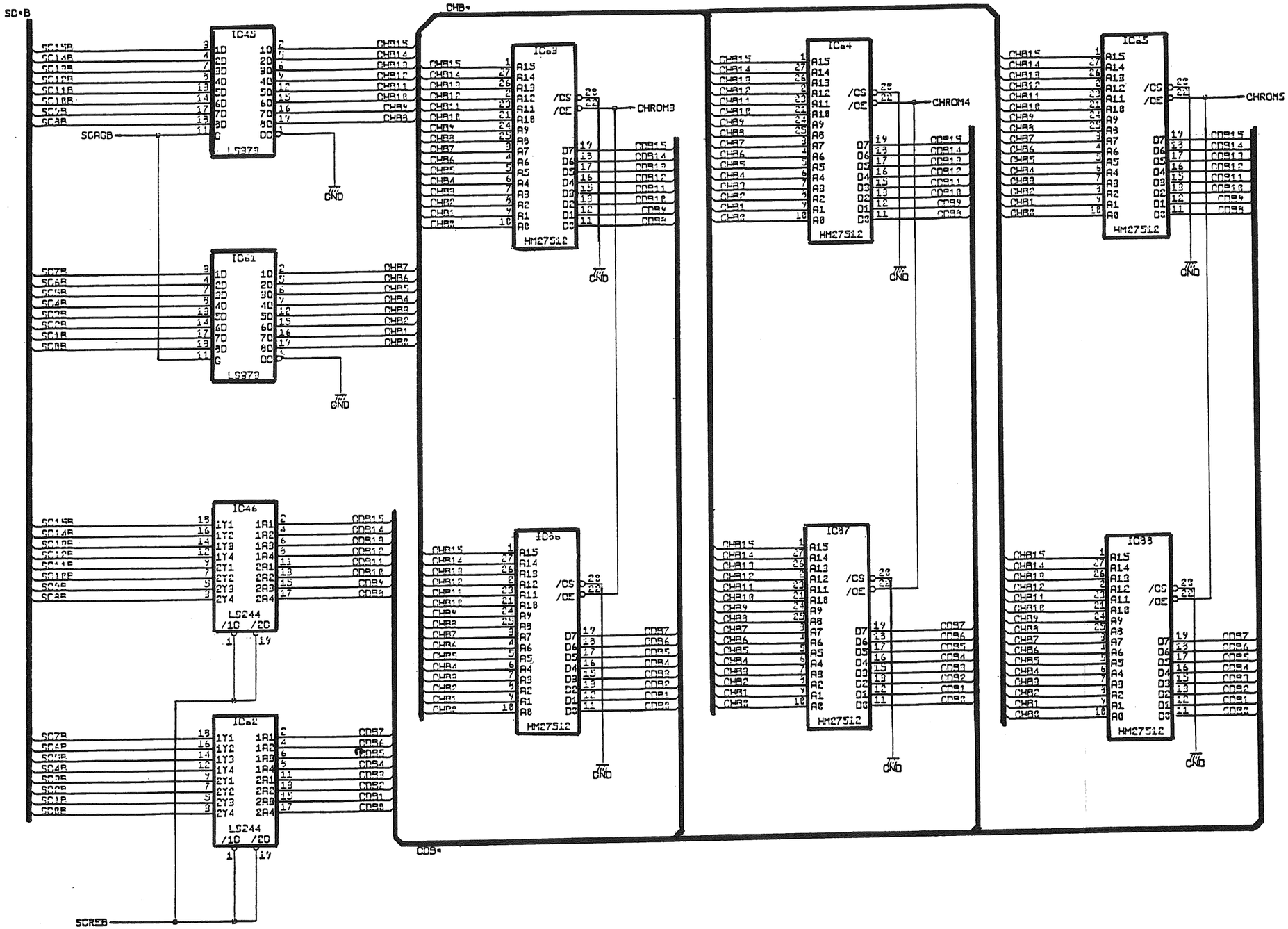

VIDEO PCB SCHEMATIC

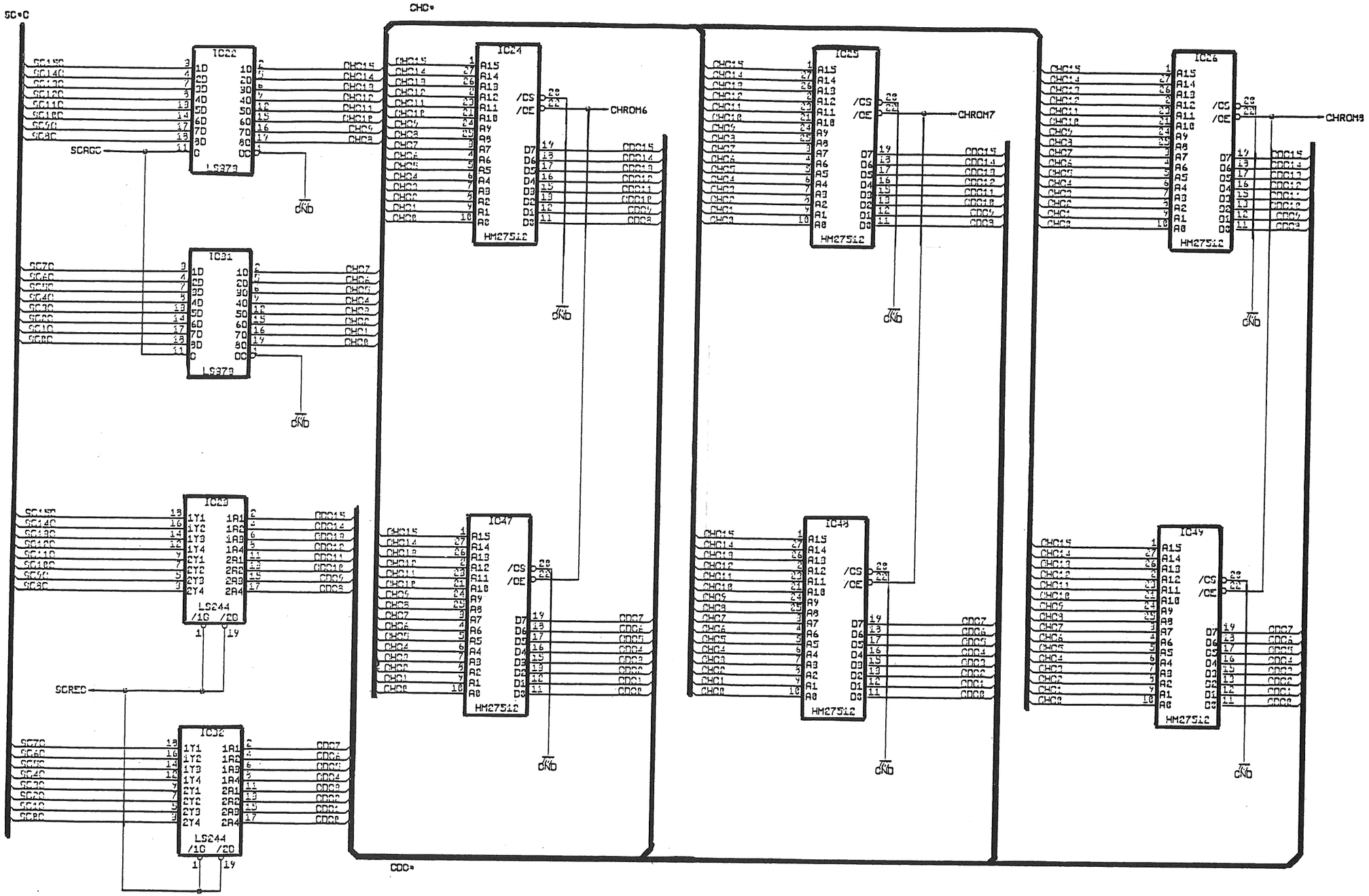

VIDEO PCB SCHEMATIC

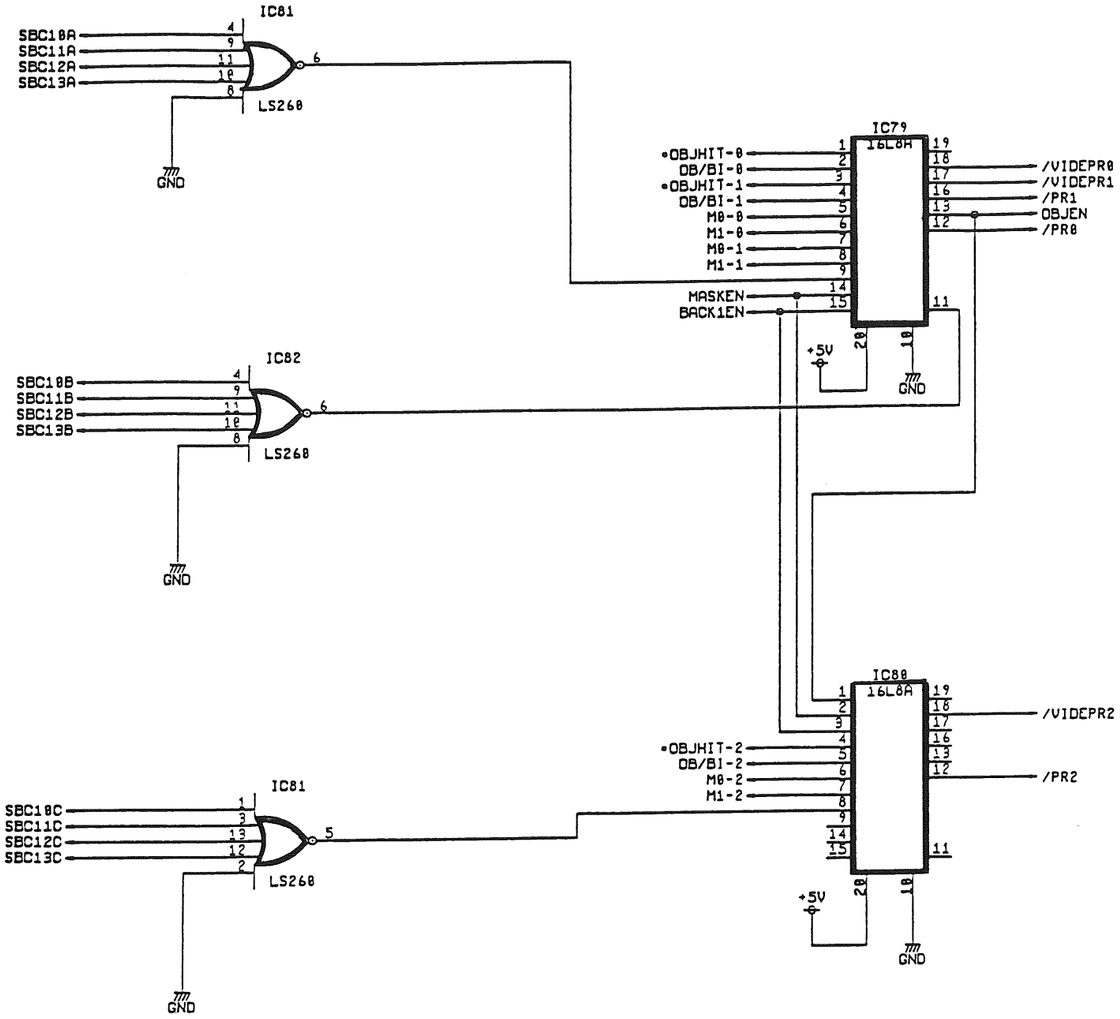

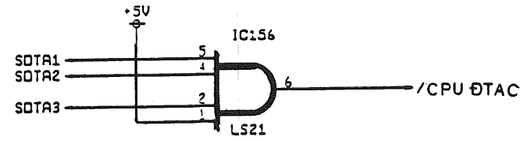

VIDEO PCB SCHEMATIC

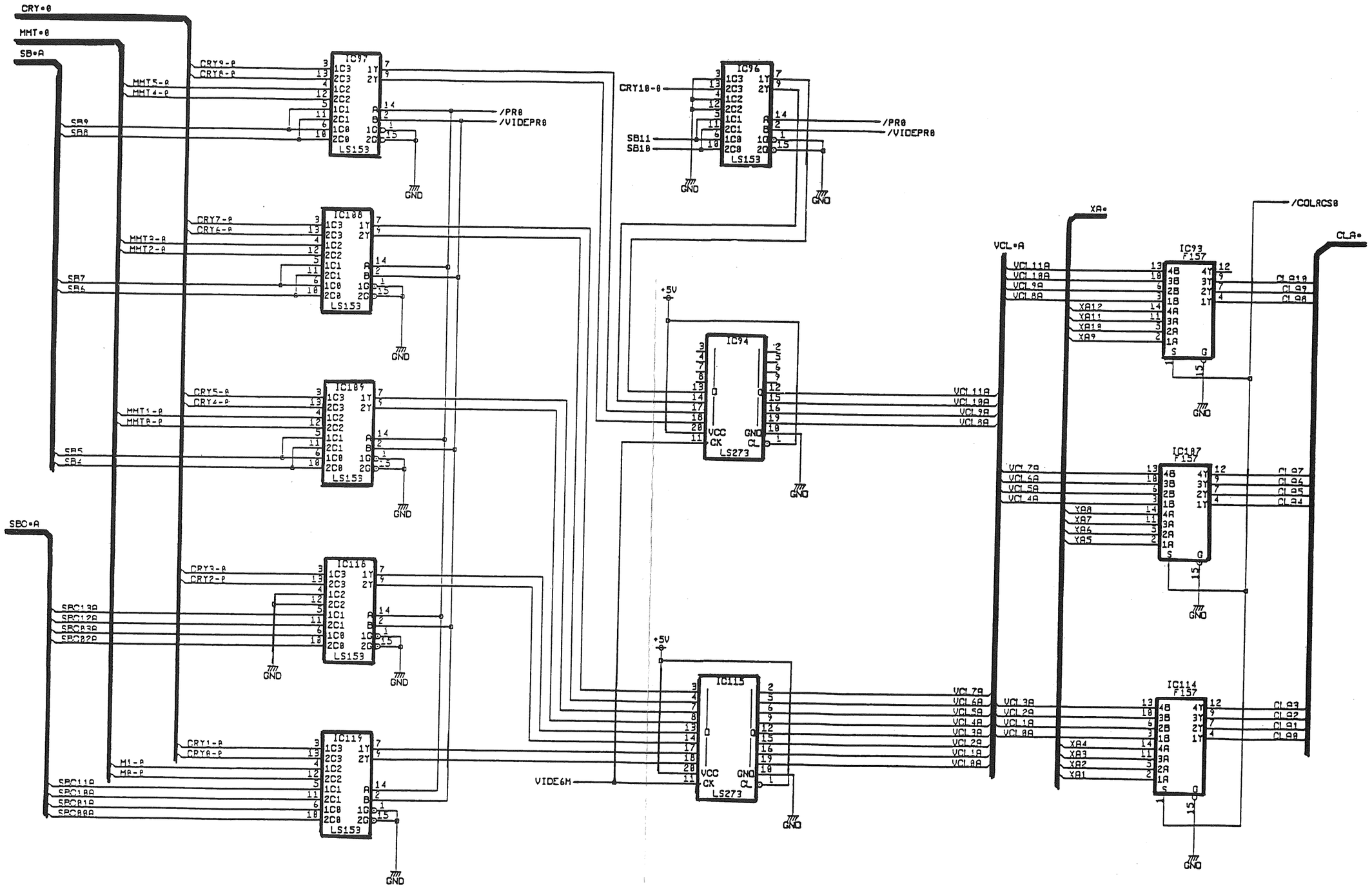

VIDEO PCB SCHEMATIC

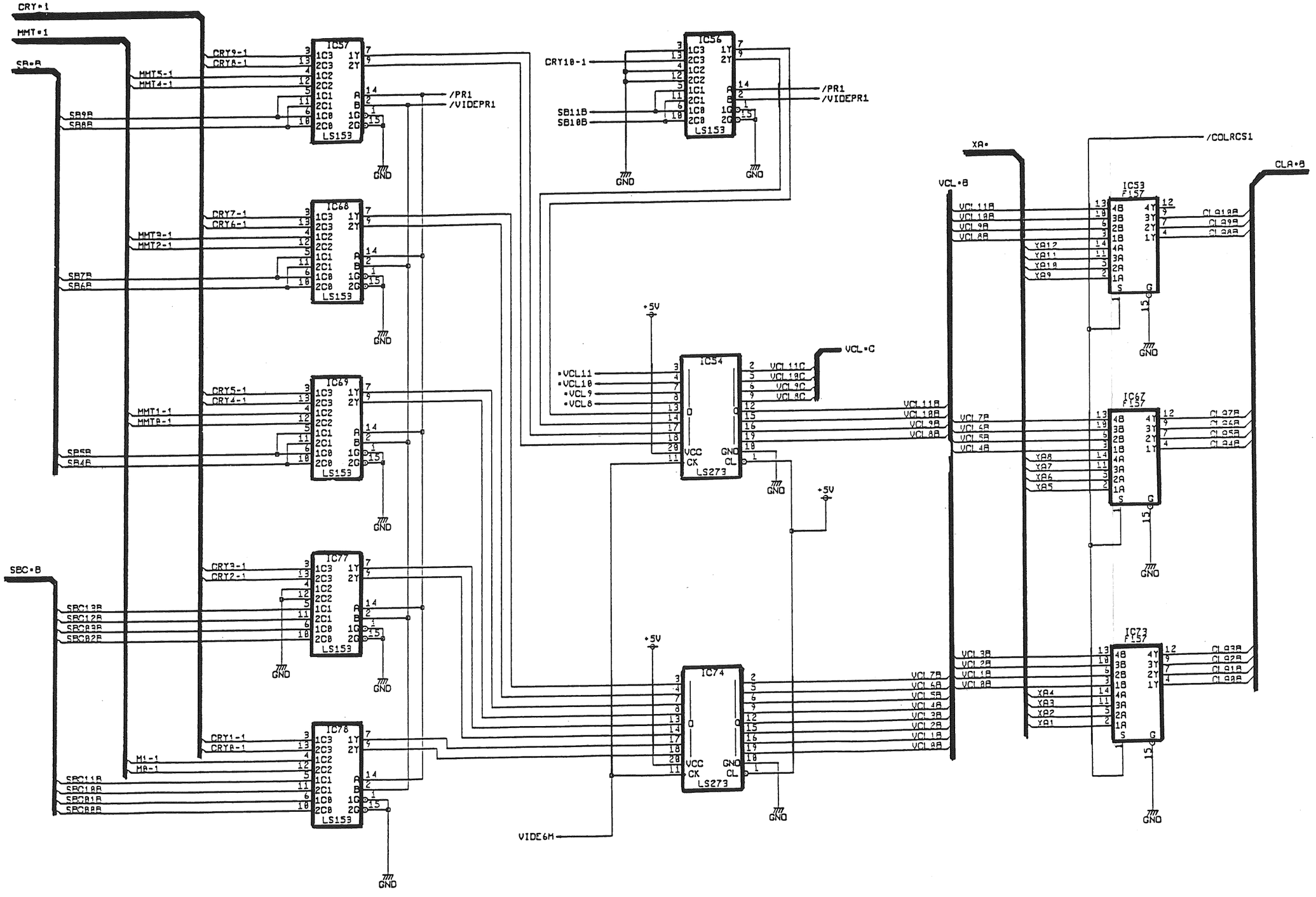

VIDEO PCB SCHEMATIC

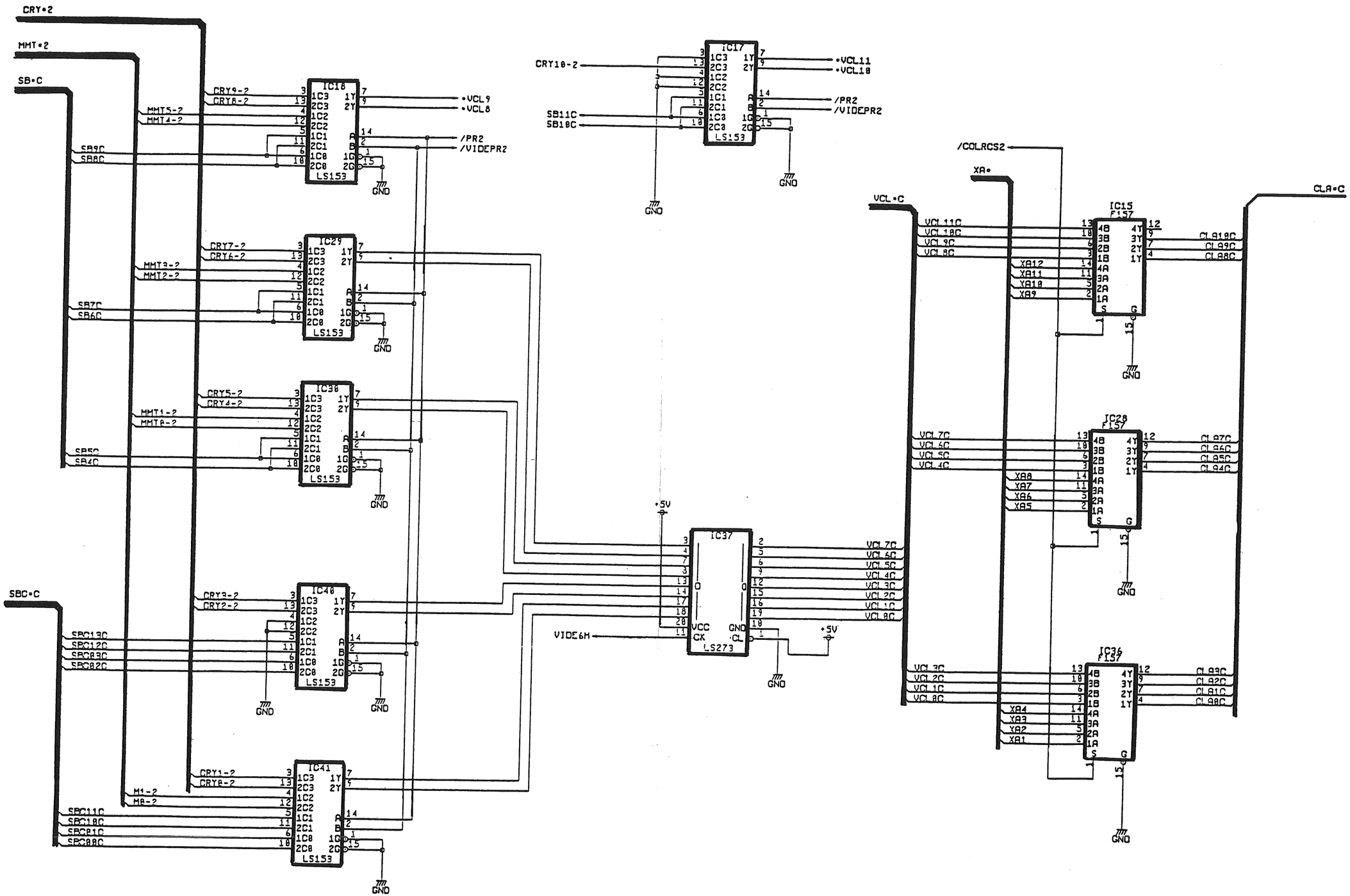

VIDEO PCB SCHEMATIC

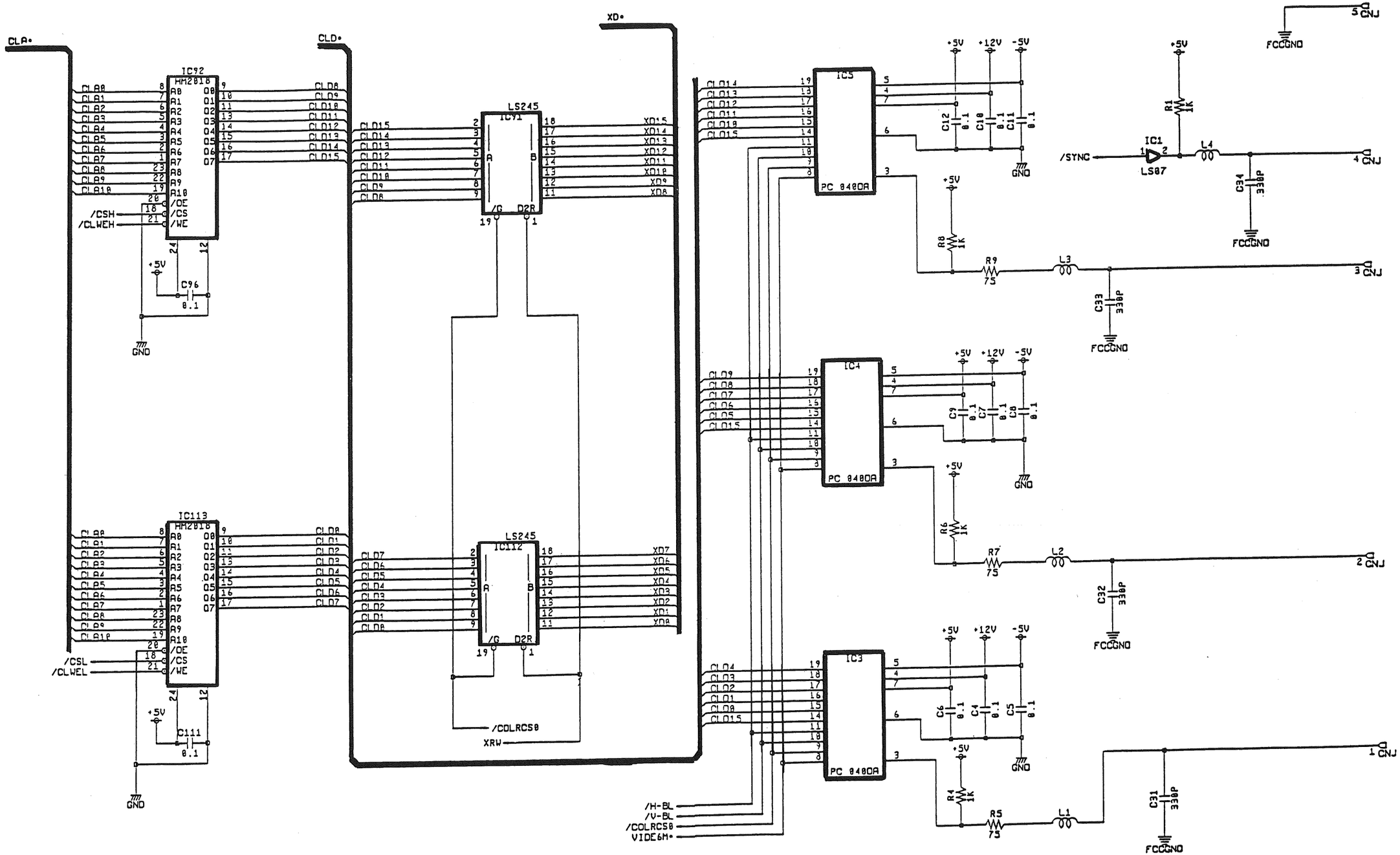

VIDEO PCB SCHEMATIC

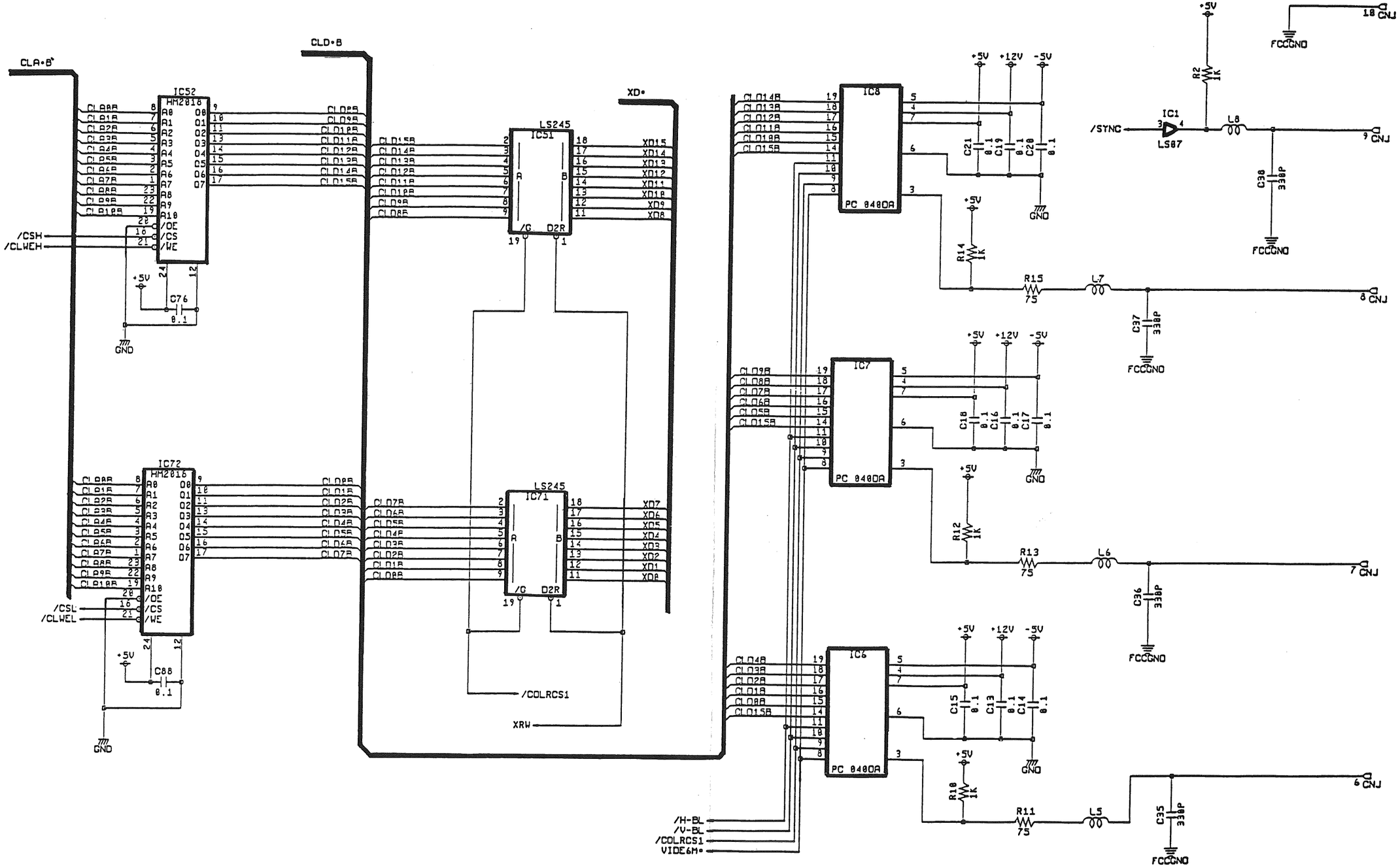

VIDEO PCB SCHEMATIC

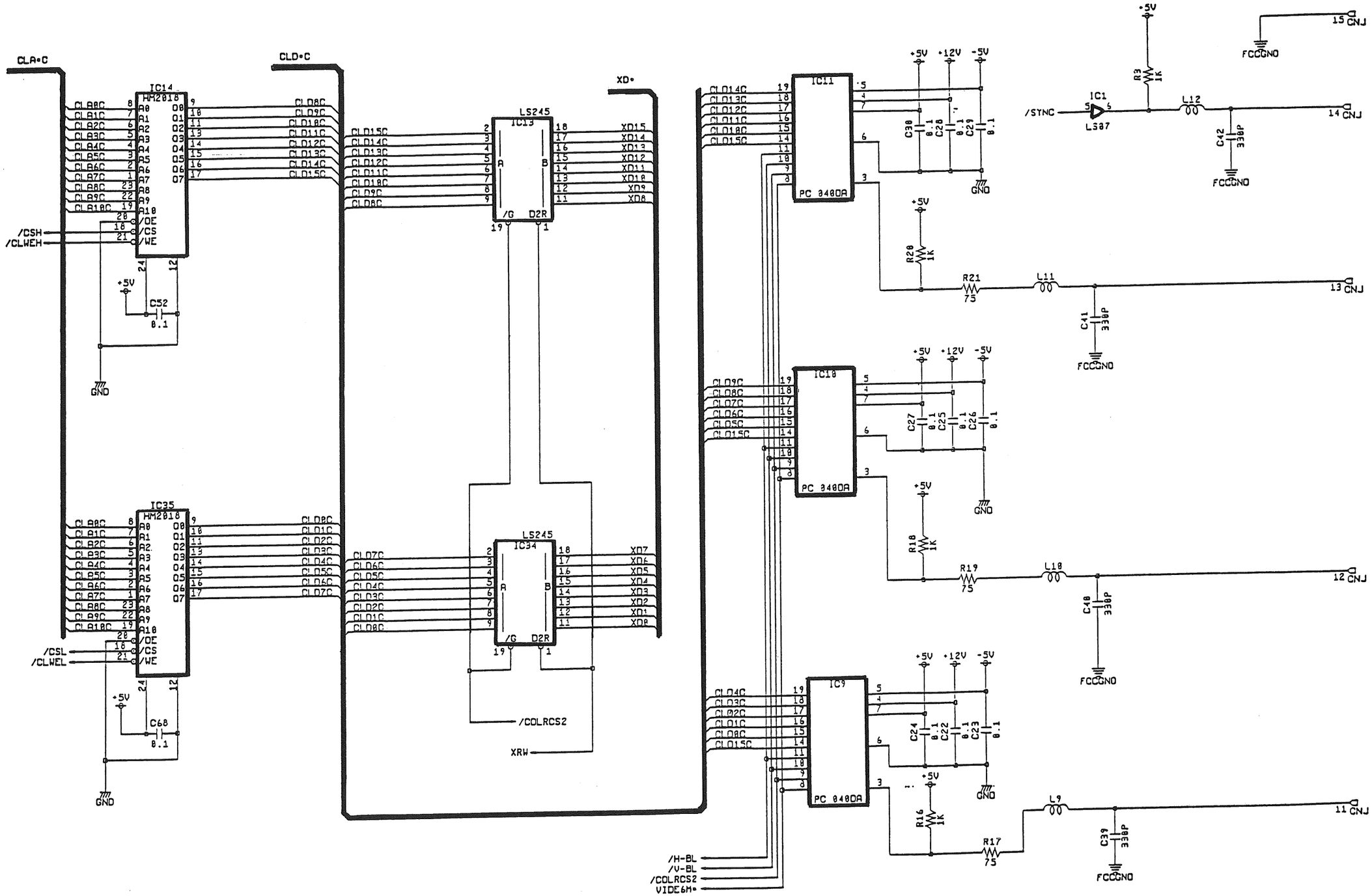

VIDEO PCB SCHEMATIC

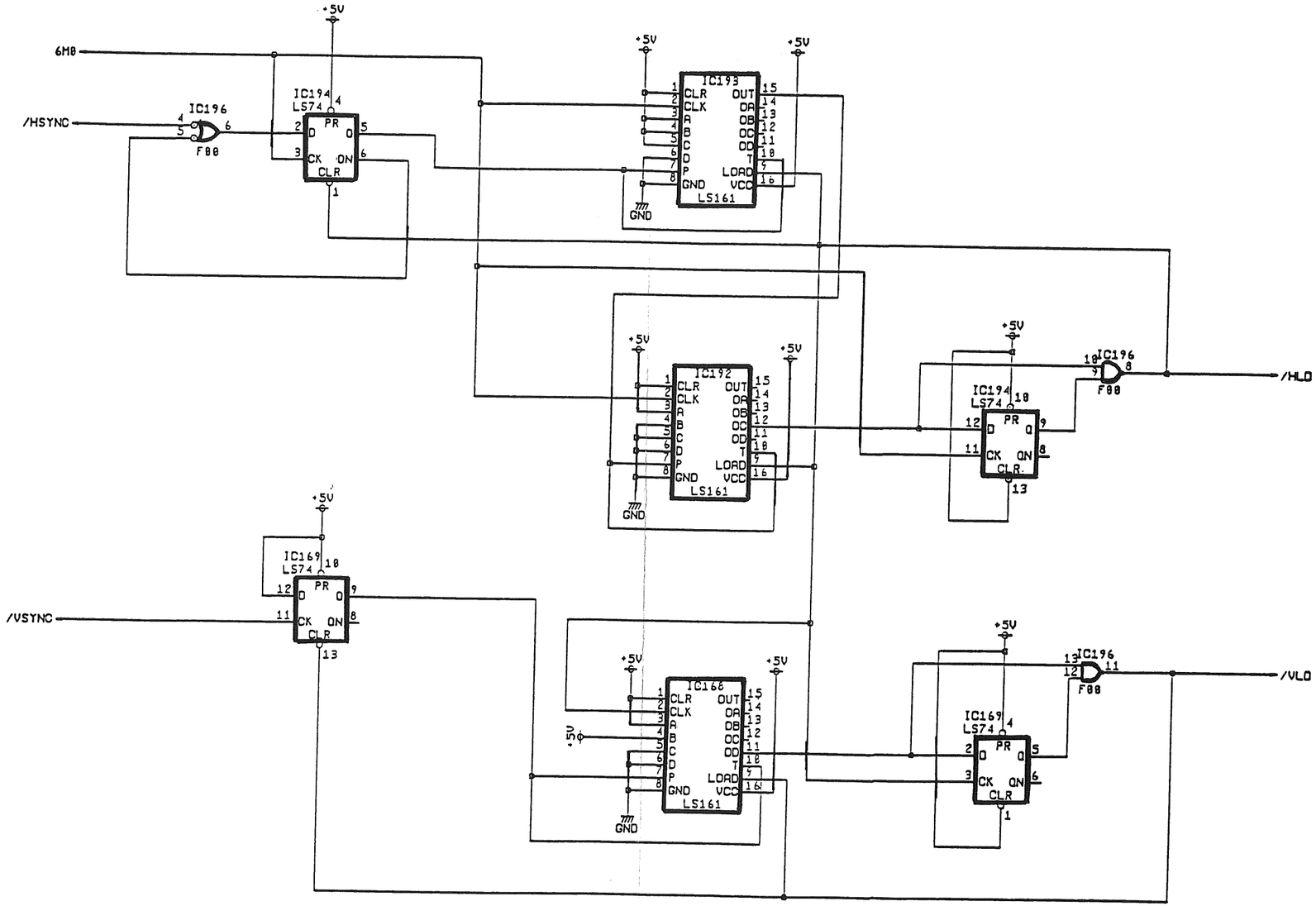

VIDEO PCB SCHEMATIC

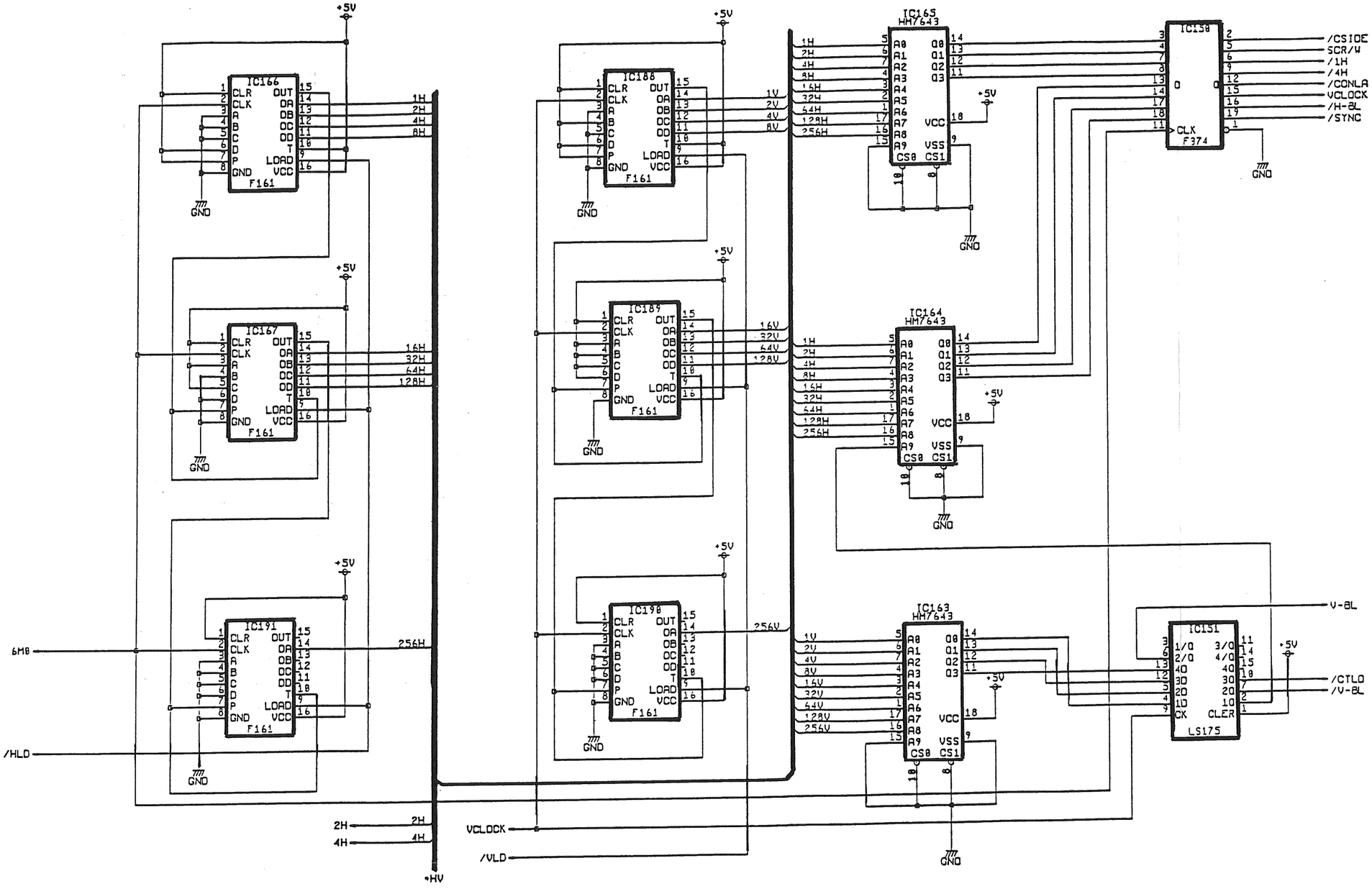

VIDEO PCB SCHEMATIC

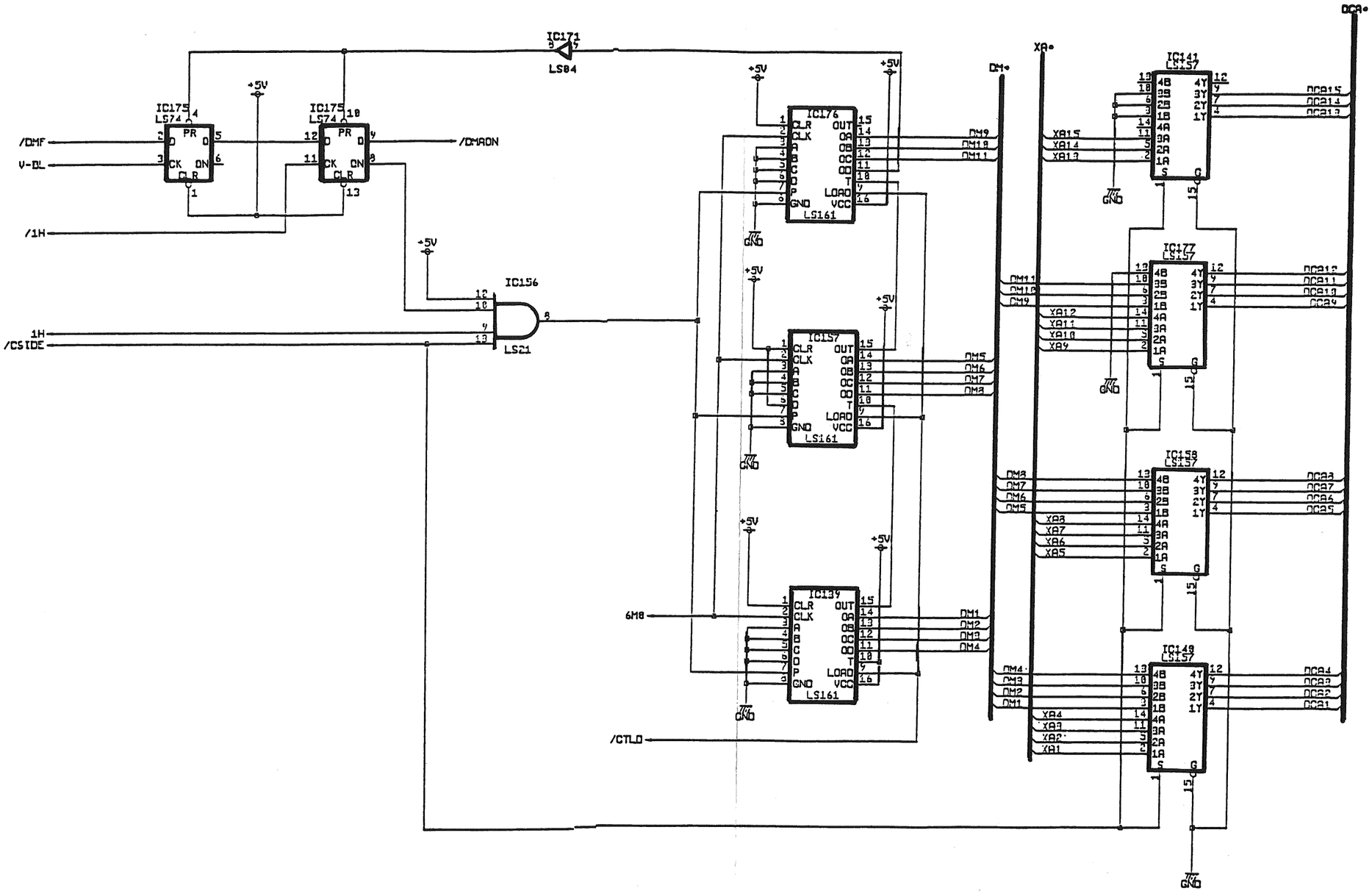
IC171
LS04
IC175
LS74
/DMF
V-BL
/1H
/DMAON
+5V
IC156
LS21
1H
/CSIDE
IC176
LS161
IC157
LS161
IC139
LS161
6M8
/CTLD
DM
XA
DCA
IC141
LS157
IC177
LS157
IC158
LS157
IC149
LS157
XA15
XA14
XA13
XA12
XA11
XA10
XA9
XA8
XA7
XA6
XA5
XA4
XA3
XA2
XA1
DCA15
DCA14
DCA13
DCA12
DCA11
DCA10
DCA9
DCA8
DCA7
DCA6
DCA5
DCA4
DCA3
DCA2
DCA1
GND

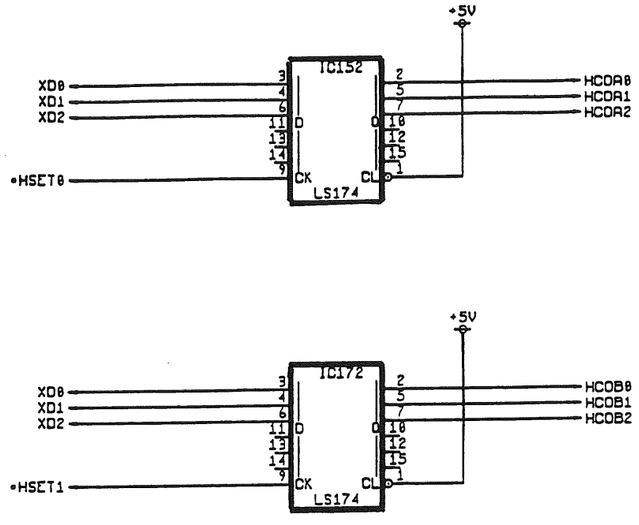
IC152
XD0
XD1
XD2
•HSET0
CK
CL
LS174
+5V
HCOA0
HCOA1
HCOA2
IC172
XD0
XD1
XD2
•HSET1
CK
CL
LS174
+5V
HCOB0
HCOB1
HCOB2

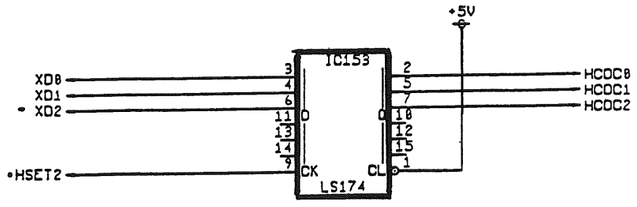
IC153
XD0
XD1
• XD2
•HSET2
CK
CL
LS174
+5V
HCOC0
HCOC1
HCOC2

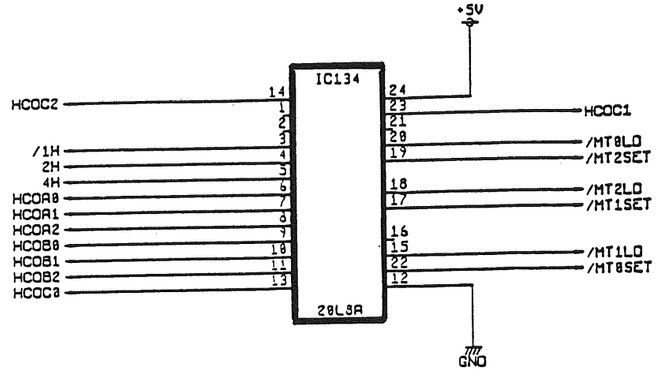
IC134
HCOC2
/1H
2H
4H
HCOA0
HCOA1
HCOA2
HCOB0
HCOB1
HCOB2
HCOC0
20L8A
+5V
GND
HCOC1
/MT0LO
/MT2SET
/MT2LO
/MT1SET
/MT1LO
/MT0SET

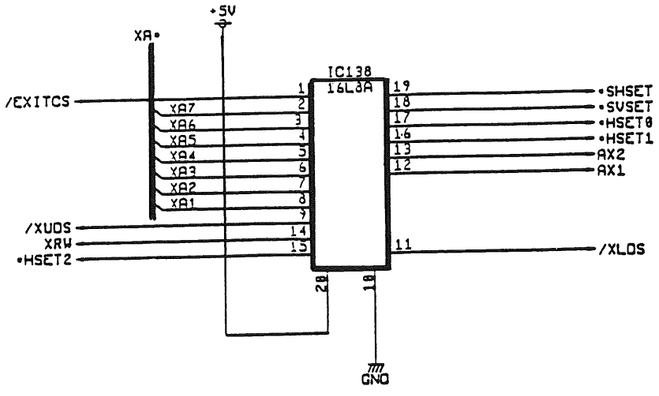
IC138
16L8A
/EXITCS
XA•
XA7
XA6
XA5
XA4
XA3
XA2
XA1
/XUDS
XRW
•HSET2
20
10
GND
+5V
•SHSET
•SVSET
•HSET0
•HSET1
AX2
AX1
/XLDS

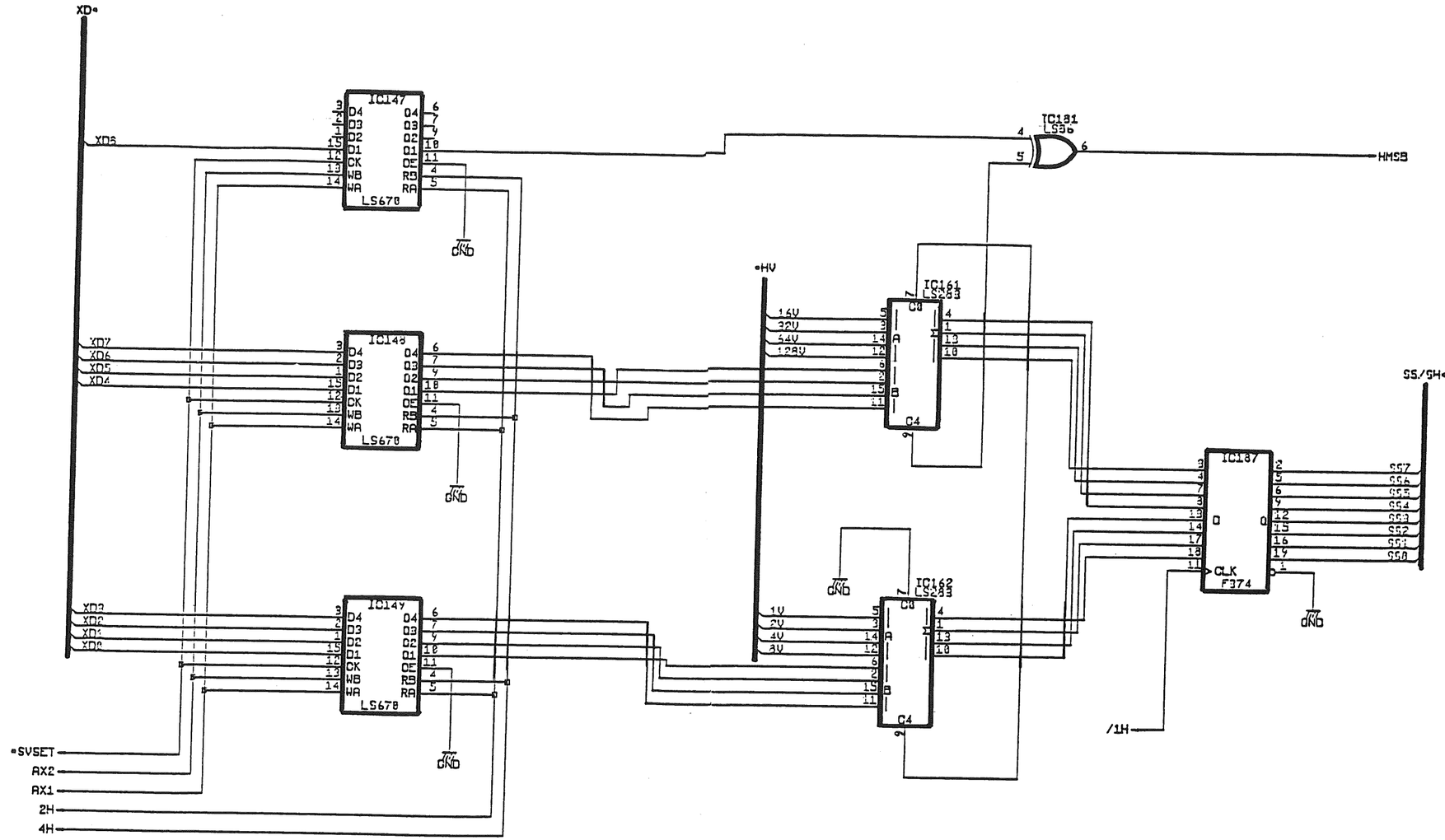

VIDEO PCB SCHEMATIC

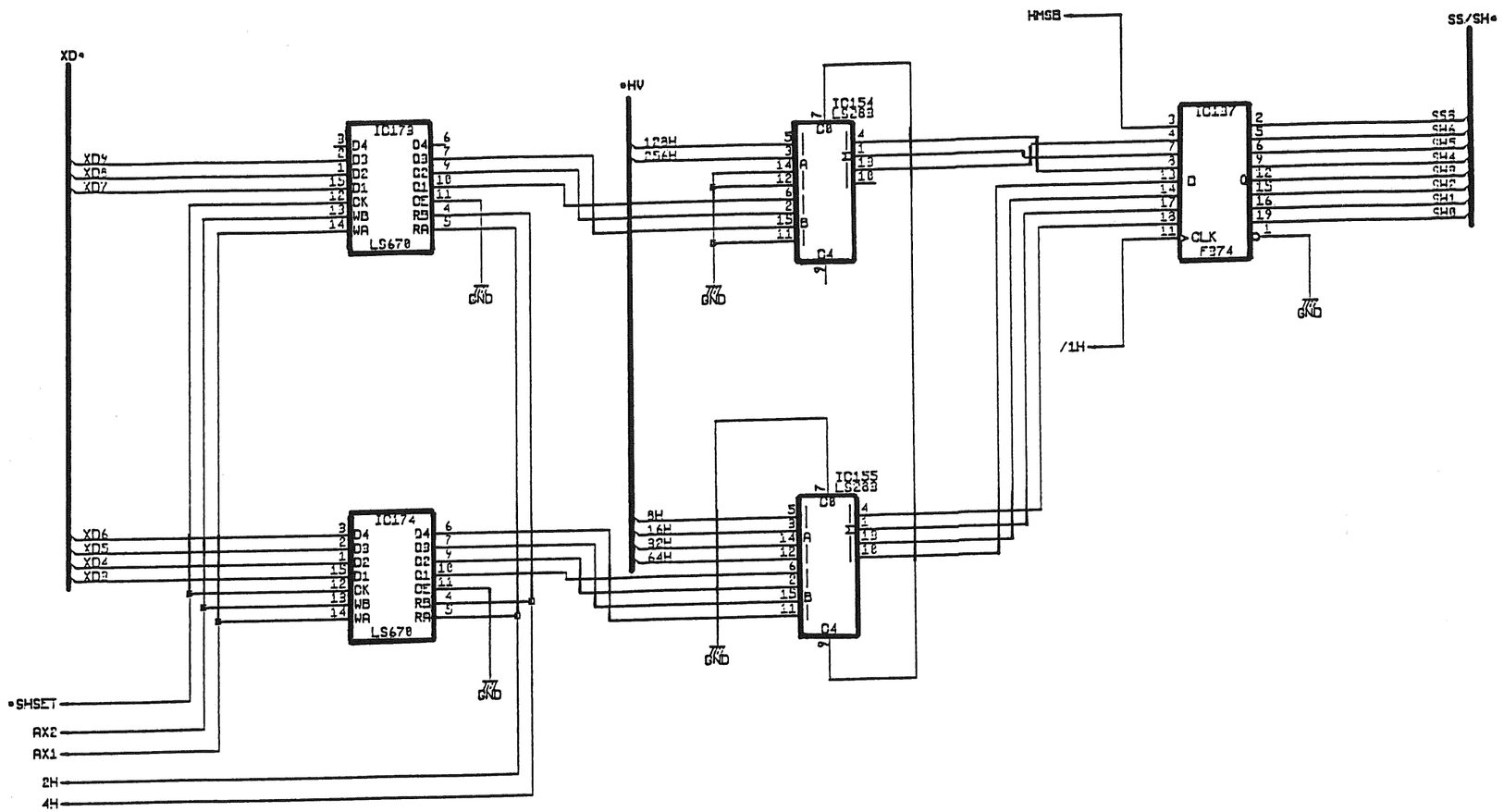

VIDEO PCB SCHEMATIC

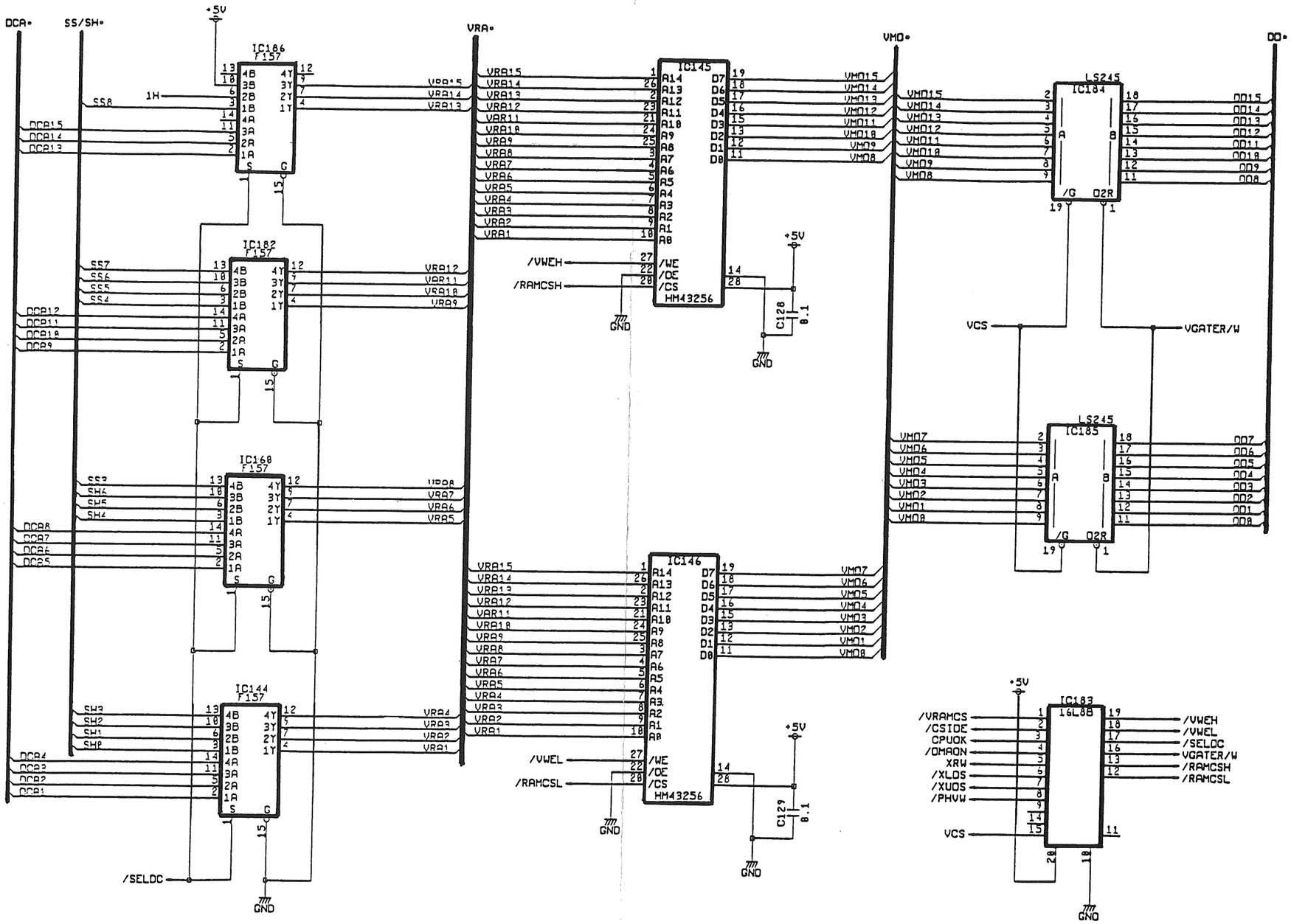

VIDEO PCB SCHEMATIC

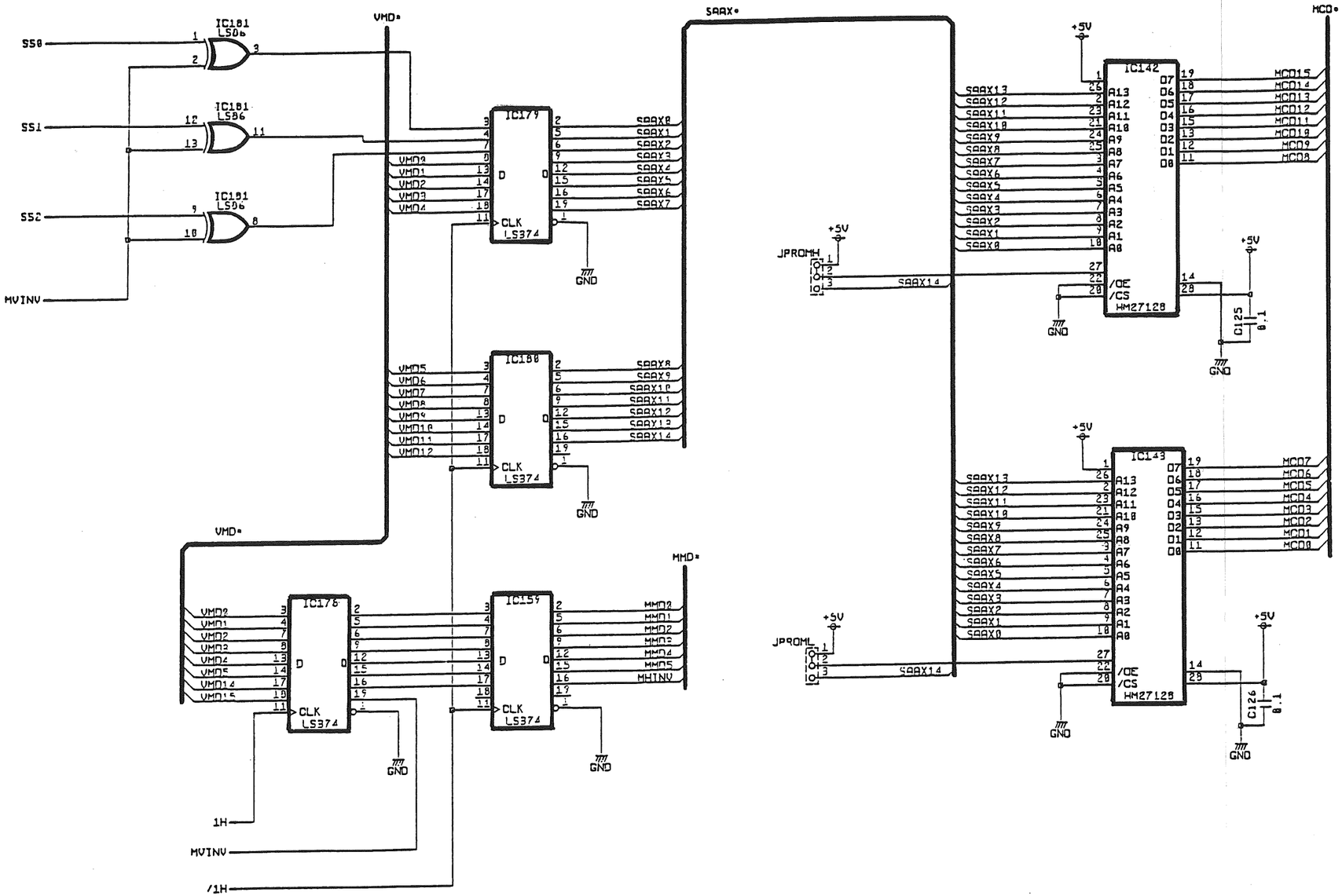

VIDEO PCB SCHEMATIC

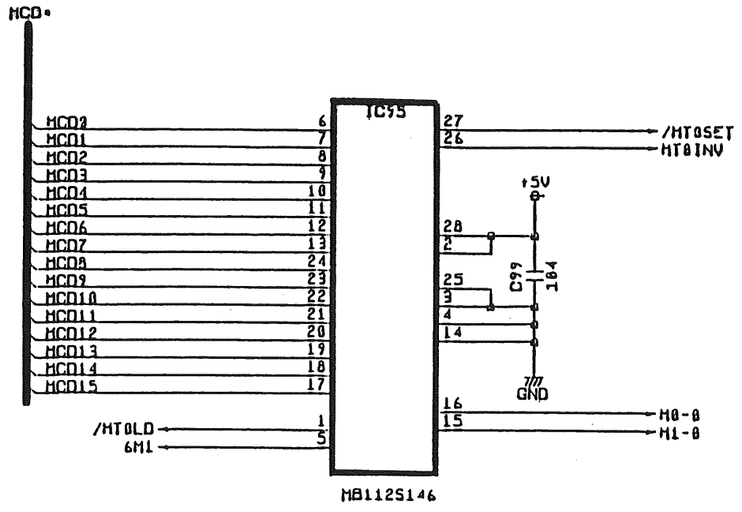
MD0•
MD0
MD1
MD2
MD3
MD4
MD5
MD6
MD7
MD8
MD9
MD10
MD11
MD12
MD13
MD14
MD15
6
7
8
9
10
11
12
13
24
23
22
21
20
19
18
17
IC55
27
26
/MT0SET
MT0INV
+5V
28
2
25
3
4
14
C99
104
GND
16
15
M0-0
M1-0
/MT0LD
6M1
1
5
MB112S146

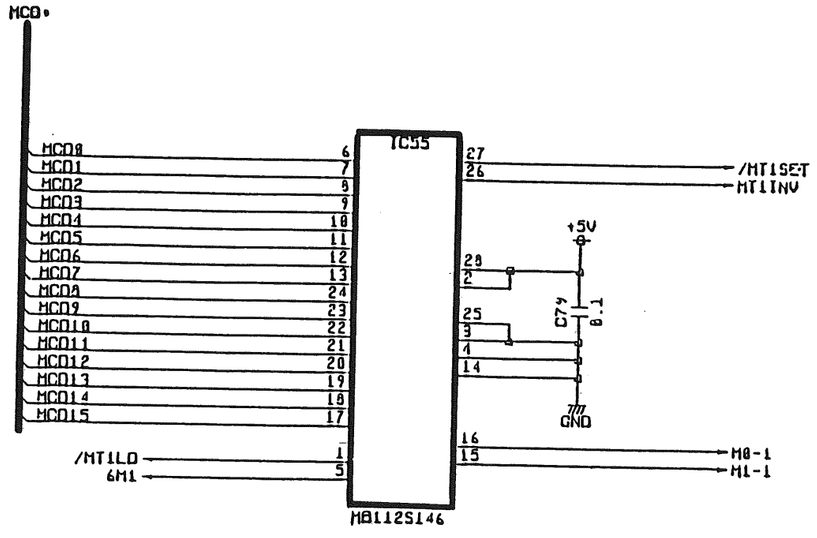
MD0•
MD0
MD1
MD2
MD3
MD4
MD5
MD6
MD7
MD8
MD9
MD10
MD11
MD12
MD13
MD14
MD15
6
7
8
9
10
11
12
13
24
23
22
21
20
19
18
17
IC55
27
26
/MT1SET
MT1INV
+5V
28
2
25
3
4
14
C79
0.1
GND
16
15
M0-1
M1-1
/MT1LD
6M1
1
5
MB112S146

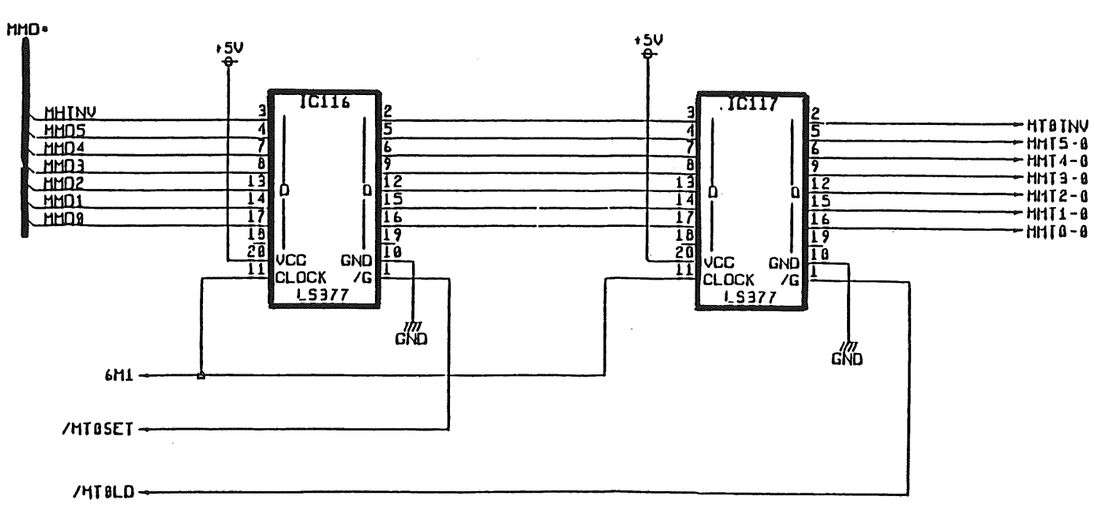
MM0•
MHINV
MM05
MM04
MM03
MM02
MM01
MM00
3
4
7
8
13
14
17
18
20
11
IC116
IC117
D
Q
VCC
GND
CLOCK
/G
LS377
+5V
GND
2
5
6
9
12
15
16
19
10
1
MT0INV
MMT5-0
MMT4-0
MMT3-0
MMT2-0
MMT1-0
MMT0-0
6M1
/MT0SET
/MT0LD

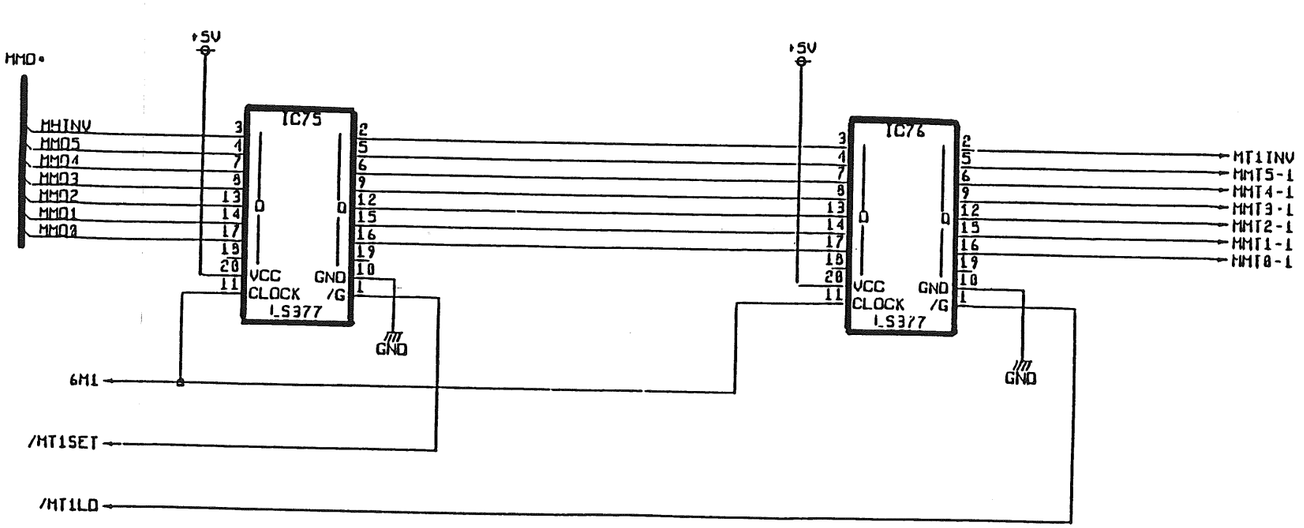
MM0•
MHINV
MM05
MM04
MM03
MM02
MM01
MM00
3
4
7
8
13
14
17
19
20
11
IC75
IC76
D
Q
VCC
GND
CLOCK
/G
LS377
+5V
GND
2
5
6
9
12
15
16
19
10
1
MT1INV
MMT5-1
MMT4-1
MMT3-1
MMT2-1
MMT1-1
MMT0-1
6M1
/MT1SET
/MT1LD

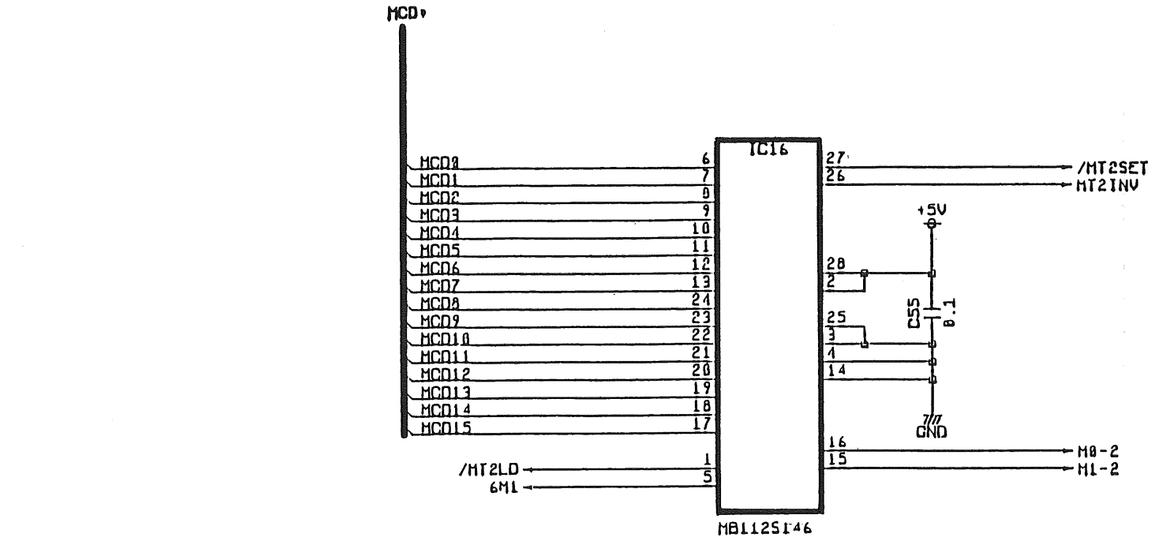
MCD•
MCD0
MCD1
MCD2
MCD3
MCD4
MCD5
MCD6
MCD7
MCD8
MCD9
MCD10
MCD11
MCD12
MCD13
MCD14
MCD15
/MT2LD
6M1
IC16
MB112S146
27
26
28
2
25
3
4
14
16
15
1
5
6
7
8
9
10
11
12
13
17
18
19
20
21
22
23
24
+5V
C55
0.1
GND
/MT2SET
MT2INV
M0-2
M1-2

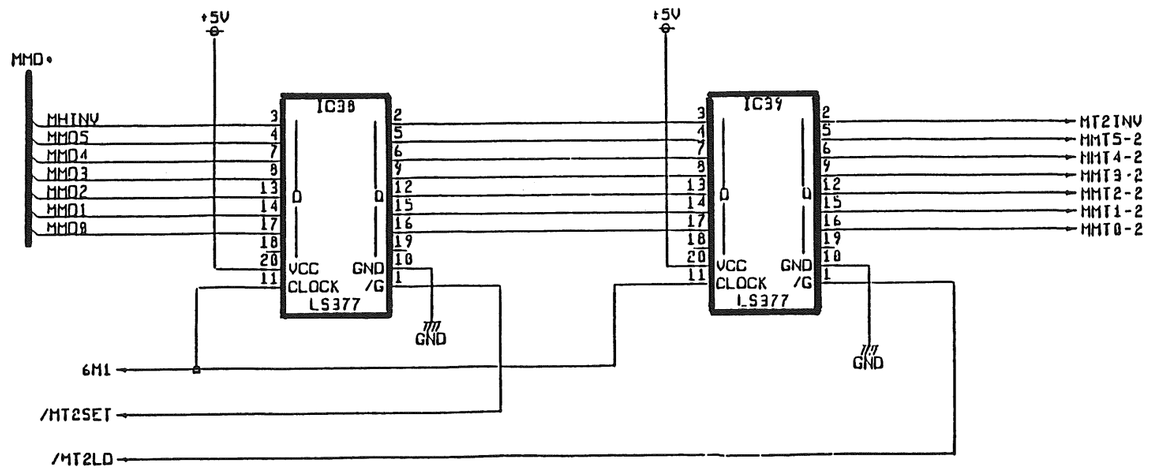
MMD•
MMINV
MMD5
MMD4
MMD3
MMD2
MMD1
MMD0
IC38
IC39
D
Q
VCC
GND
CLOCK
/G
LS377
+5V
GND
6M1
/MT2SET
/MT2LD
MT2INV
MMT5-2
MMT4-2
MMT3-2
MMT2-2
MMT1-2
MMT0-2

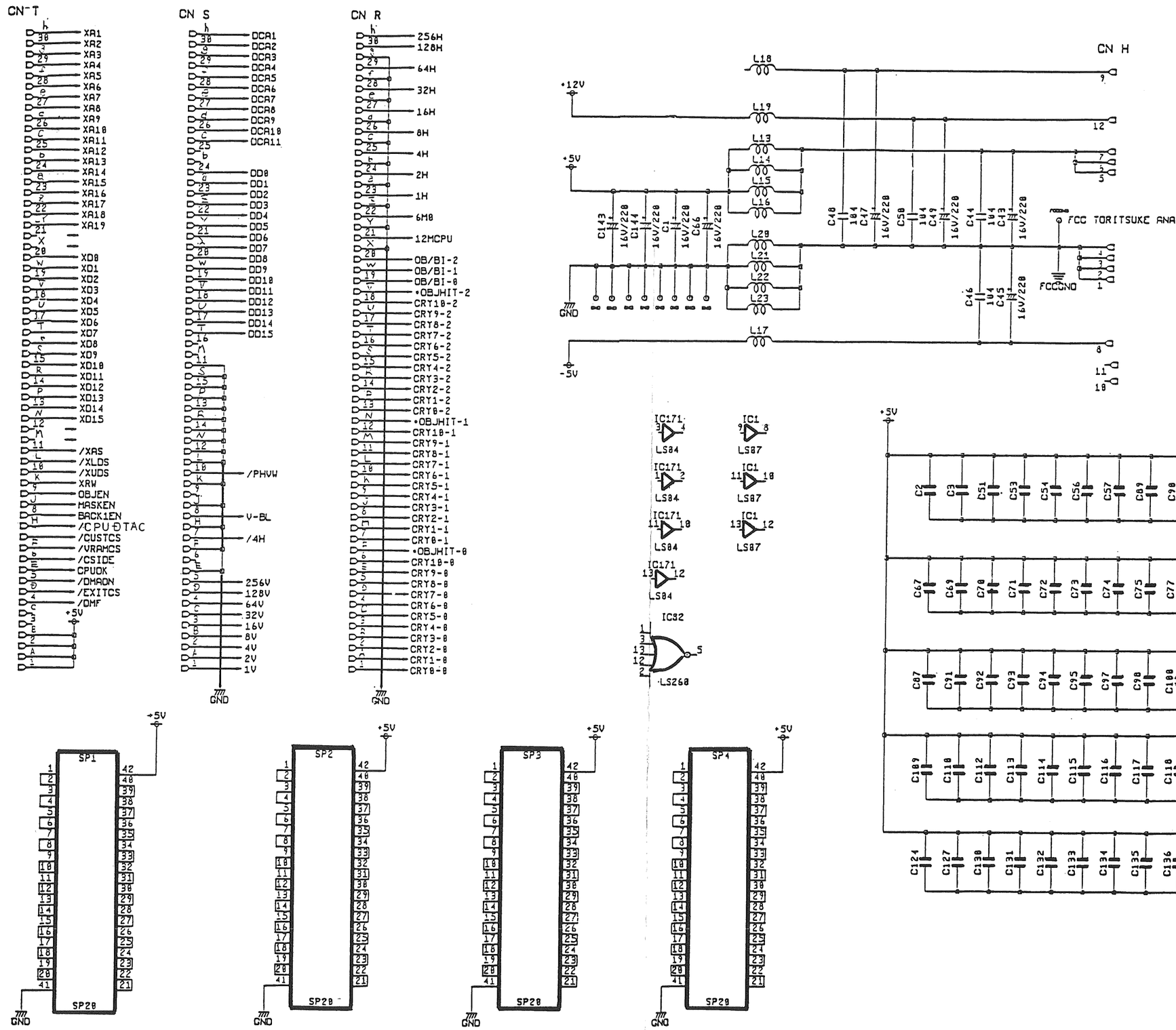
CN T
XA1
XA2
XA3
XA4
XA5
XA6
XA7
XA8
XA9
XA10
XA11
XA12
XA13
XA14
XA15
XA16
XA17
XA18
XA19
XD0
XD1
XD2
XD3
XD4
XD5
XD6
XD7
XD8
XD9
XD10
XD11
XD12
XD13
XD14
XD15
/XAS
/XLDS
/XUDS
XRW
OBJEN
MASKEN
BACK1EN
/CPU-DTAC
/CUSTCS
/VRAMCS
/CSIDE
CPUOK
/DMAON
/EXITCS
/DMF
+5V
CN S
DCA1
DCA2
DCA3
DCA4
DCA5
DCA6
DCA7
DCA8
DCA9
DCA10
DCA11
DD0
DD1
DD2
DD3
DD4
DD5
DD6
DD7
DD8
DD9
DD10
DD11
DD12
DD13
DD14
DD15
/PHVW
V-BL
/4H
256V
128V
64V
32V
16V
8V
4V
2V
1V
GND
CN R
256H
128H
64H
32H
16H
8H
4H
2H
1H
6M8
12MCPU
OB/BI-2
OB/BI-1
OB/BI-0
•OBJHIT-2
CRY10-2
CRY9-2
CRY8-2
CRY7-2
CRY6-2
CRY5-2
CRY4-2
CRY3-2
CRY2-2
CRY1-2
CRY0-2
•OBJHIT-1
CRY10-1
CRY9-1
CRY8-1
CRY7-1
CRY6-1
CRY5-1
CRY4-1
CRY3-1
CRY2-1
CRY1-1
CRY0-1
•OBJHIT-0
CRY10-0
CRY9-0
CRY8-0
CRY7-0
CRY6-0
CRY5-0
CRY4-0
CRY3-0
CRY2-0
CRY1-0
CRY0-0
GND
CN H
+12V
+5V
-5V
GND
L18
L19
L13
L14
L15
L16
L20
L21
L22
L23
L17
C143 16V/220
C144 16V/220
C1 16V/220
C66 16V/220
C40 104
C47 16V/220
C50 104
C49 16V/220
C14 104
C43 16V/220
C46 104
C45 16V/220
FCC TORITSUKE ANA
FCCGND
IC171 LS84
IC1 LS87
IC32 LS260
SP1
SP2
SP3
SP4
SP20
C2
C3
C51
C53
C54
C56
C57
C89
C90
C61
C62
C63
C64
C65
C67
C69
C70
C71
C72
C73
C74
C75
C77
C78
C80
C81
C85
C86
C87
C91
C92
C93
C94
C95
C97
C98
C100
C101
C105
C106
C107
C108
C109
C110
C112
C113
C114
C115
C116
C117
C118
C119
C120
C121
C122
C123
C124
C127
C130
C131
C132
C133
C134
C135
C136
C137
C138
C139
C140
C142

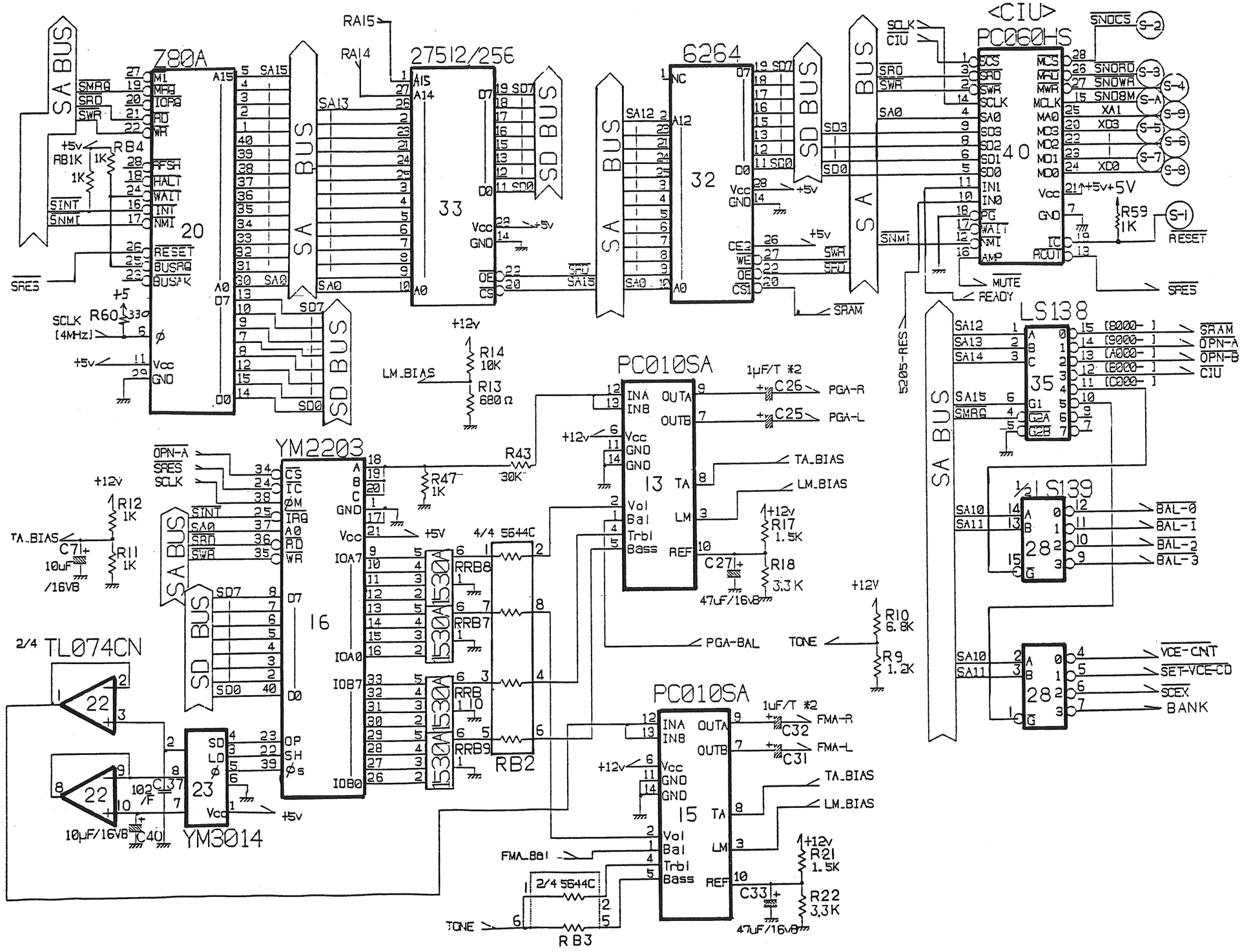

SOUND
SCHEMATIC

P-ON-RES	1	A	Ø M
SND-CS	2	B	
MRD	3	C	
MWR	4	D	
MD3	5	E	GND
MD2	6	F	
MD1	7	H	
MD0	8	J	
MA0	9	K	(N. C.)
+12V	10	L	-5V
+5V	11	M	+5V
+5V	12	N	+5V
-13V	13	P	+13V
(N. C.)	14	R	(N. C.)
(N. C.)	15	S	(N. C.)

SOUND
SCHEMATIC

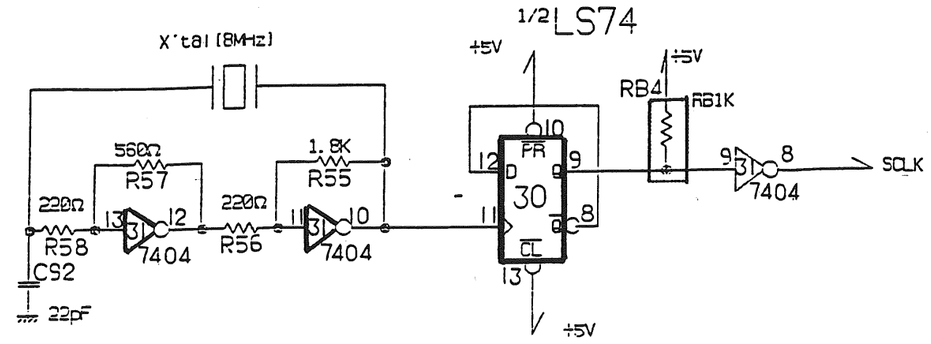

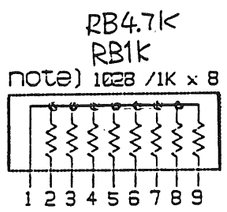

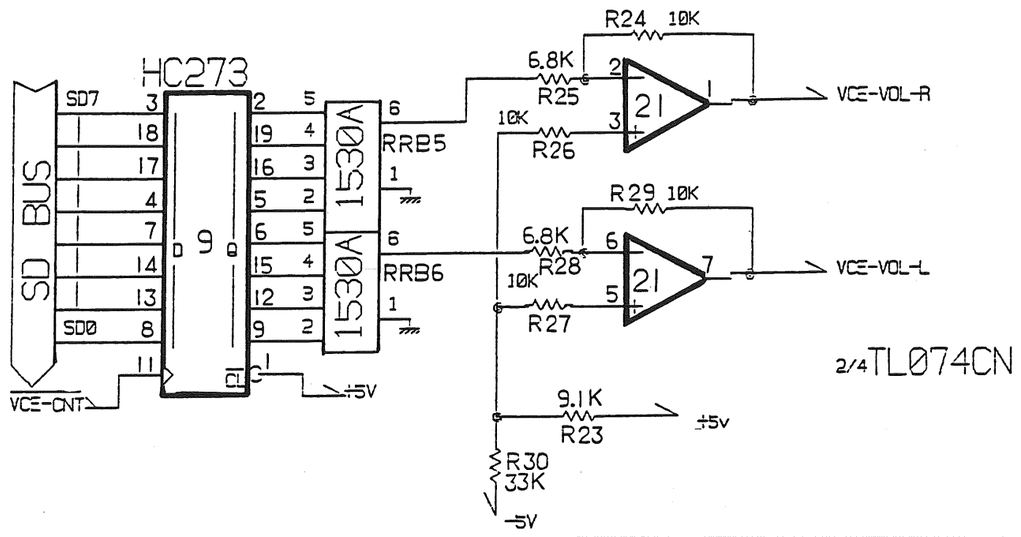

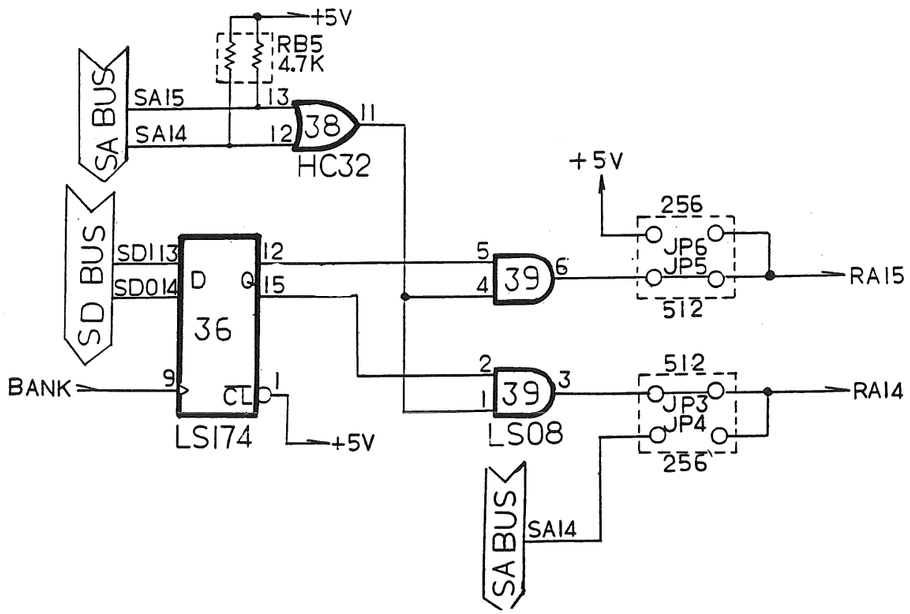

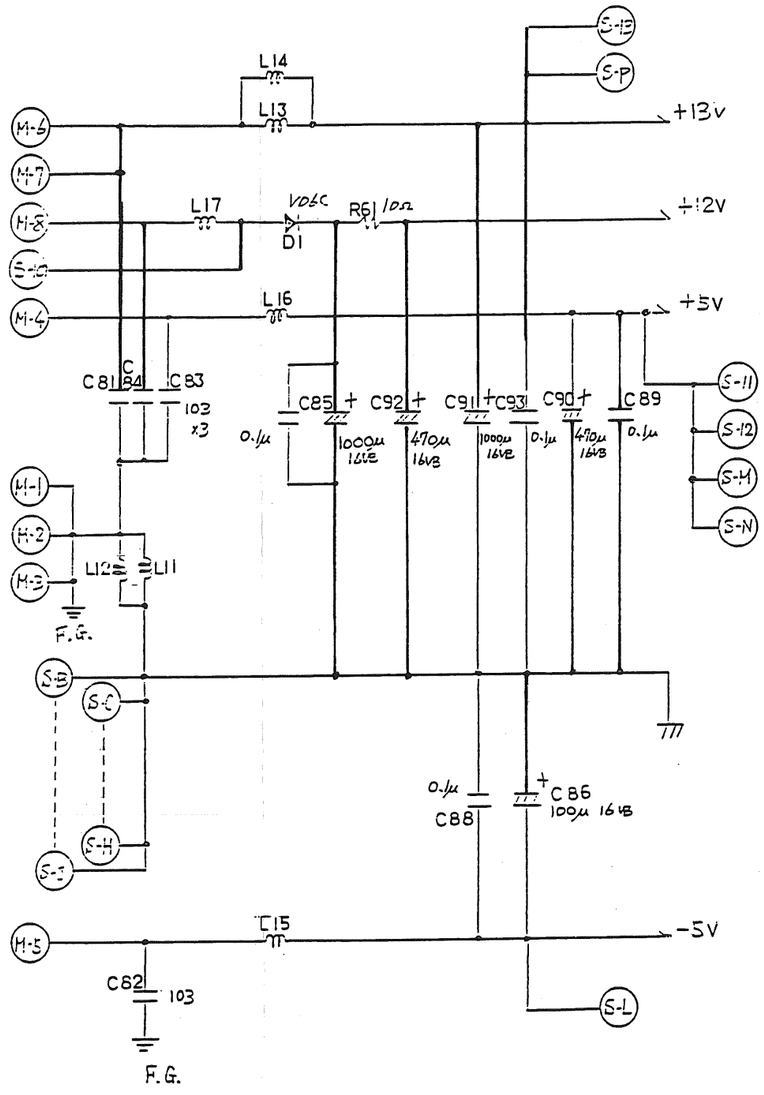

SOUND
SCHEMATIC

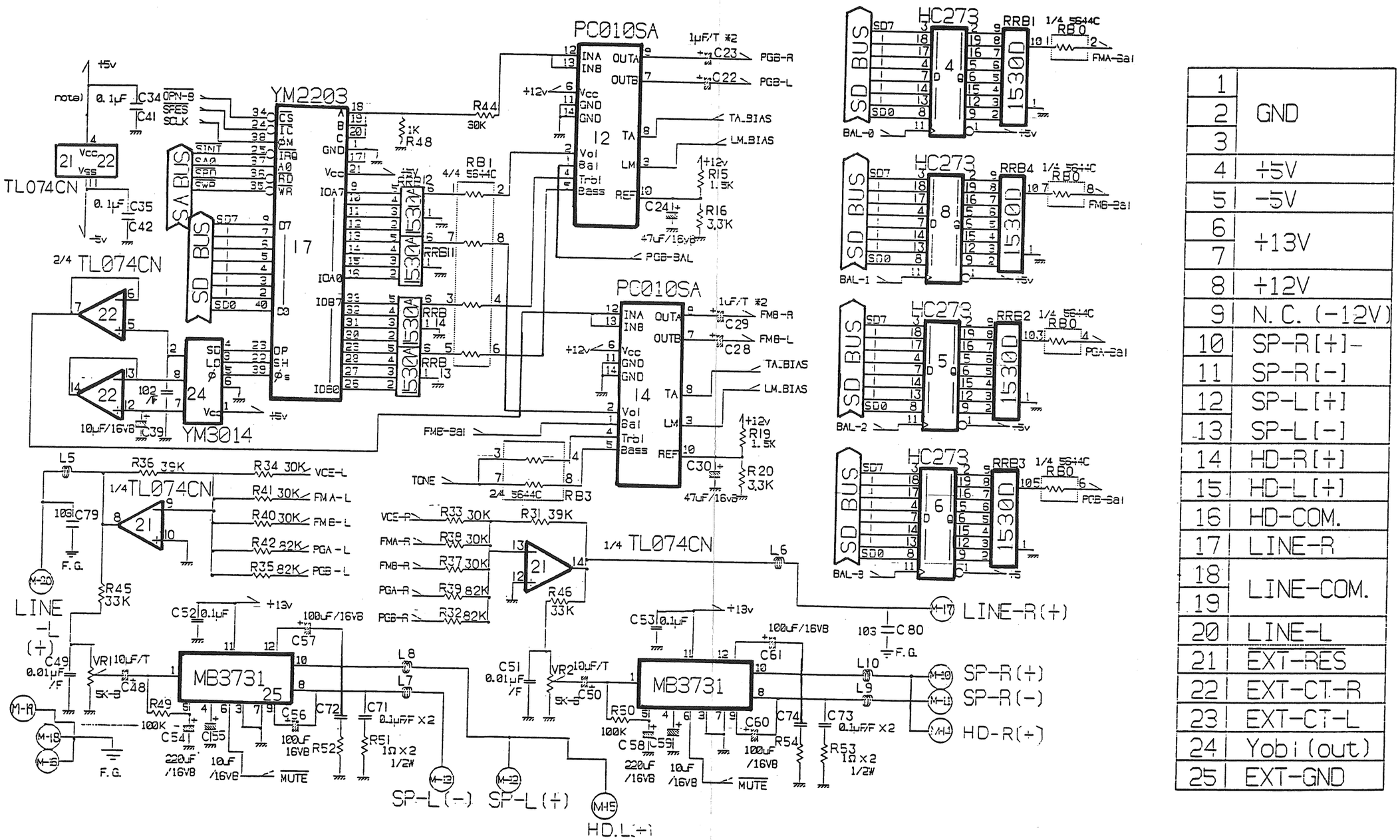

1	
2	GND
3	
4	+5V
5	-5V
6	
7	+13V
8	+12V
9	N. C. (-12V)
10	SP-R[+]-
11	SP-R[-]
12	SP-L[+]
13	SP-L[-]
14	HD-R[+]
15	HD-L[+]
16	HD-COM.
17	LINE-R
18	LINE-COM.
19	
20	LINE-L
21	EXT-RES
22	EXT-CT-R
23	EXT-CT-L
24	Yobi(out)
25	EXT-GND

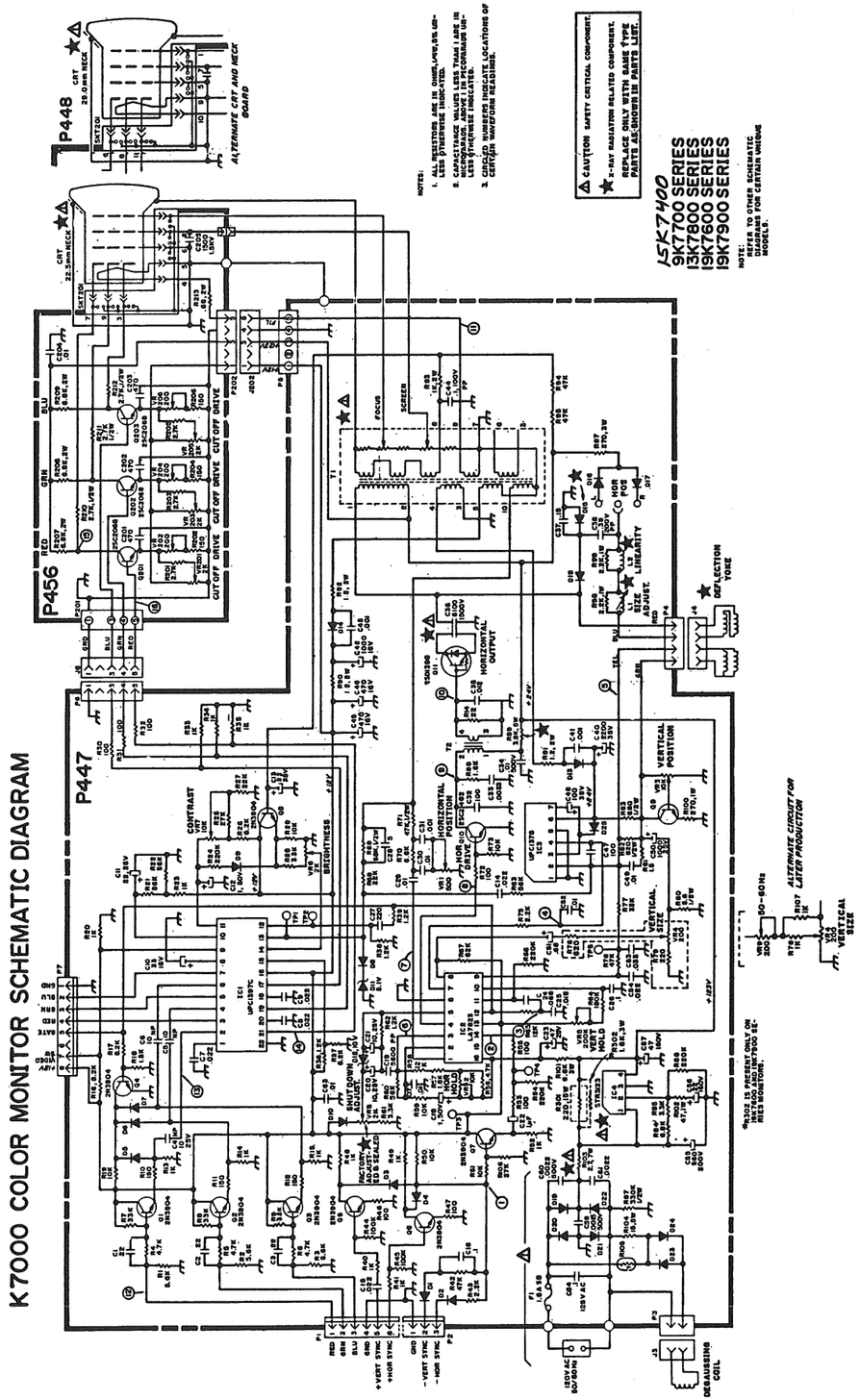

MONITOR SCHEMATIC

SYM	PART NO.	DESCRIPTION	QTY.
	J1100098A	VIDEO PCB	1
C1	A1000135A	ELECT BLOCK 16VB220	8
C2	A1200257A	CAP CERAMIC 50VB 330p	12
C3	A1200123A	CAP CERAMIC 26VB 100000p	124
R1	A2000038A	RES CARBON 75 Ohm 1/4W +5%	9
R2	A2000065A	RES CARBON 1K Ohm 1/4W +5%	13
XTAL	A9000171A	X-TAL OSC 26.686 MHz	1
IC1	B01X0004A	TTL IC 74LS04	1
LC2	B01X0007A	74LS07	1
IC3	B01X0021A	74LS21	1
IC4	B01X0074A	74LS74	3
IC5	B01X0086A	74LS86	1
IC6	B01X0139A	74LS139	2
IC7	B01X0153A	74LS153	18
IC8	B01X0157A	74LS157	4
IC9	B01X0161A	74LS161	6
IC10	B01X0174A	74LS174	3
IC11	B01X0175A	74LS175	1
IC12	B01X0244A	74LS244	16
IC13	B01X0245A	74LS245	10
IC14	B01X0260A	74LS260	2
IC15	B01X0273A	74LS273	5
IC16	B01X0283A	74LS283	12
IC17	B01X0373A	74LS373	6
IC18	B01X0374A	74LS374	4
IC19	B01X0377A	74LS377	7
IC20	B01X0670A	74LS670	5
IC21	B04X0074A	TTL ALS IC 74LS74	1
IC22	B04X0534A	74LS534	2
IC23	B05X0000A	TTL F IC 74F00	1
IC24	B05X0157A	74F157	14
IC25	B05X0161A	74F161	6
IC26	B05X0244A	74F244	1
IC27	B05X0374A	74F374	3
IC28	B07X2175A	G-MOS HC IC 74HC75	1
Ram 1	B10X0028A	S-RAM 2018-35	6
Ran 2	B10X0029B	43256-100	8
Cus 1	B16Z0012A	CUSTOM IC MB112S146	3
Cus 2	B16Z0022A	PC040DA	9
Cus 3	B16Z0025A	PC080SN	3
Pal 1	B2002566A	PAL A96-17 (16L8A)	1
Pal 2	B2002567A	A96-18	1
Pal 3	B2002568A	A96-19	1
Pal 4	B2002569A	A96-20 (20L8A)	1
Pal 5	B2002570A	A96-21	1
Pal 6	B2002571A	A96-22 (16L8A)	1
Pal 7	B2002572A	A96-23	1
Rom 1	B2002573A	ROM A96-24 (7643-70)	1
Rom 2	B2002574A	A96-25	1
Rom 3	B2002575A	A96-26	1
Pal 8	B2002576A	PAL A96-27 (16L8B)	1
Rom 4	B2002597A	ROM A96-48 (27512-200)	3
Rom 5	B2002597A	A96-49	3
Rom 6	B2002599A	A96-50	3
Rom 7	B2002600A	A96-51	3
Rom 8	B2002601A	A96-52	3
Rom 9	B2002602A	A96-53	3
Rom10	B2002603A	A96-54 (27128-250)	1
Rom11	B2002604A	A96-55	1

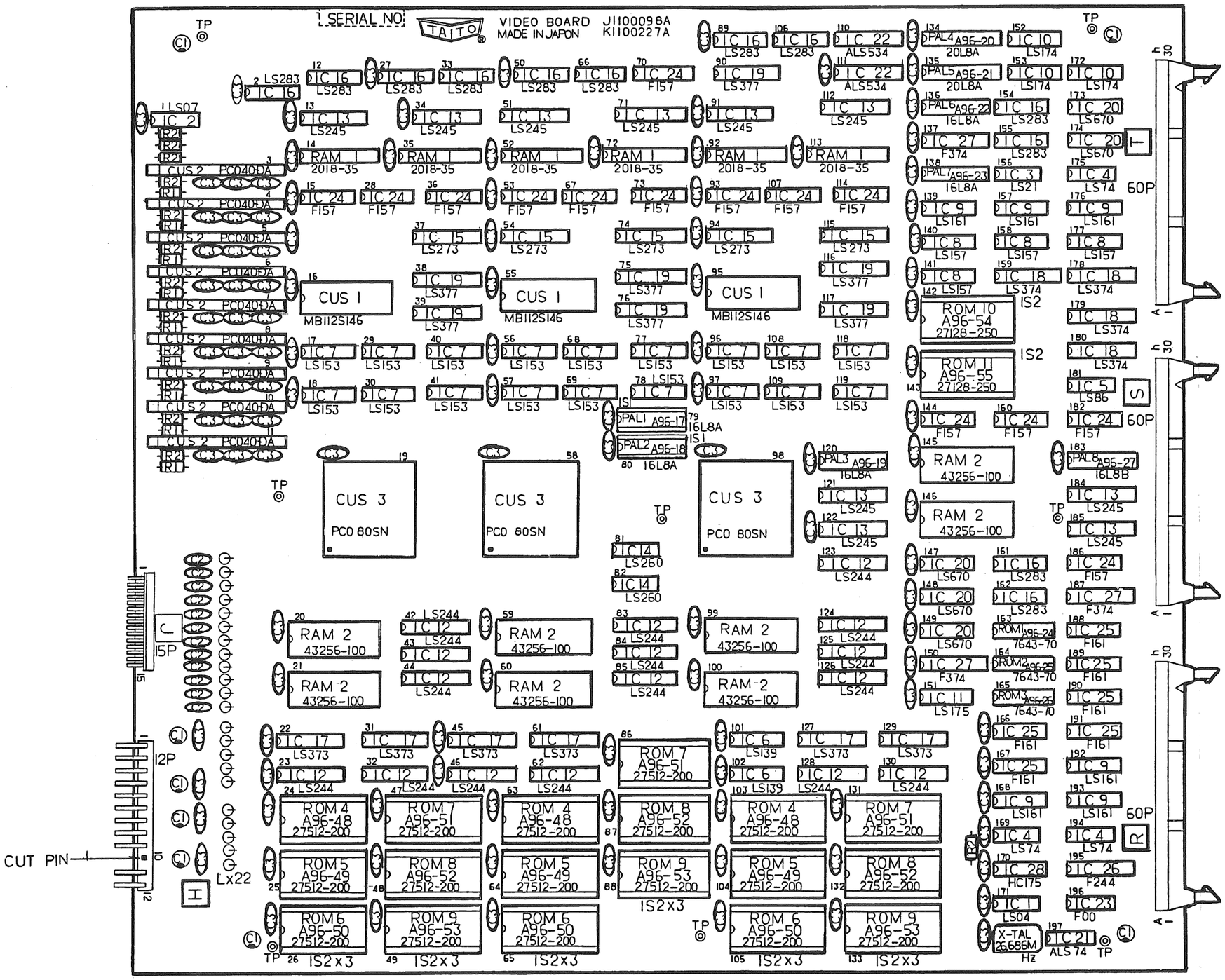

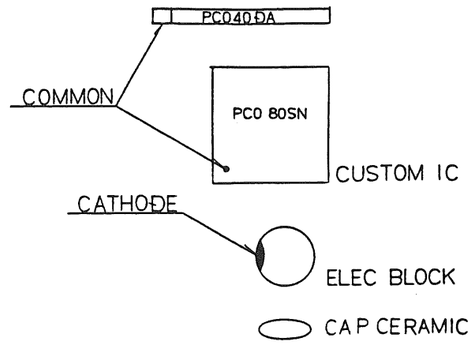

NOTE 1 SYMBOL

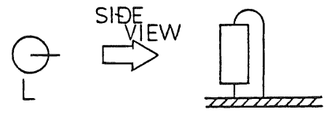

NOTE 2 BEADS FILTER

VIDEO PCB

SYM	PART NO.	DESCRIPTION	QTY
	J1100099A	SOUND PC BOARD	1
D1	A0200029A	DIODE VO3C	1
RB1	A2231065A	R-BLOCK 1028	1
RB2	A2231081A	R-BLOCK 4728	1
RB3	A2239006A	RES NETWORK 1530D	4
RB4	A2239007A	RES NETWORK 1530A	10
RB5	A2239010A	RES ARRAY 5644C	4
R1	A2000017A	RES CARBON 10 Ohm,1/4 W +5%	1
R2	A2000049A	220	2
R3	A2000053A	330	1
R4	A2000059A	560	1
R5	A2000061A	680	1
R6	A2000065A	1K	4
R7	A2000067A	1.2K	1
R8	A2000069A	1.5K	4
R9	A2000071A	1.8K	1
R10	A2000077A	3.3K	4
R11	A2000080A	4.3K	2
R12	A2000082A	5.1K	2
R13	A2000085A	6.8K	4
R14	A2000086A	7.5K	2
R15	A2000088A	9.1K	1
R16	A2000089A	10K	7
R17	A2000100A	30K	8
R18	A2000101A	33K	3
R19	A2000103A	39K	2
R20	A2000111A	82K	4
R21	A2000113A	100K	2
R22	A2000470A	RES CARBON 1 1/2W +5%	4
VR	A2102411A	VARIABLE RESISTOR TM KPV 5K	2
C1	A1000119A	CAP ELEC 10u 16VB	5
C2	A1000127A	47u	4
C3	A1000131A	100u	5
C4	A1000135A	220u	2
C5	A1000139A	470u	2
C6	A1000143A	1000u	2
C7	A1100124A	CAP FILM 0.001u 50V	2
C8	A1100136A	0.0033u	1
C9	A1100147A	0.01u	7
C10	A1100170A	0.1u	4
C11	A1200123A	CAP CERMIC 0.1u 25V	34
C12	A1200229A	22p 50V	2
C13	A1200245A	100p	1
C14	A1200269A	1000p	1
C15	A1200293A	0.01u	8
C16	A1320307A	TANT DIP 1u 16V	12
C17	A1320319A	TANT DIP 10u 16V	2
X1	A9000072A	X-TAL 8MHz	1
X2	A9000170A	CERLOCK 384KHz	1
IC1	B01X0008A	TTL IC 74LS08	1
IC2	B01X0074A	74LS74	2
IC3	B01X0126A	74LS126	1
IC4	B01X0138A	74LS138	1
IC5	B01X0139A	74LS139	1
IC6	B01X0155A	74LS155	1
IC7	B01X0174A	74LS174	3
IC8	B01X0374A	74LS374	1
IC9	B03X0004A	TTL NORMAL 7404	1
IC10	B07X2032A	C-MOS IC 74HC 32	1
IC11	B07X2273A	C-MOS IC 74HC 273	5
IC12	B08X2014B	CPU Z80A	2
IC13	B10X0030A	S-RAM MB846A-150 SK	1
Cus1	B1670024A	CIU PC060HA	1
Cus2	B1672019A	SOUND EFFECT PC010SA	4
IC16	B1770322A	OP AMP TL074CN	3
PA	B1771606A	POWER AMP MB3731	2

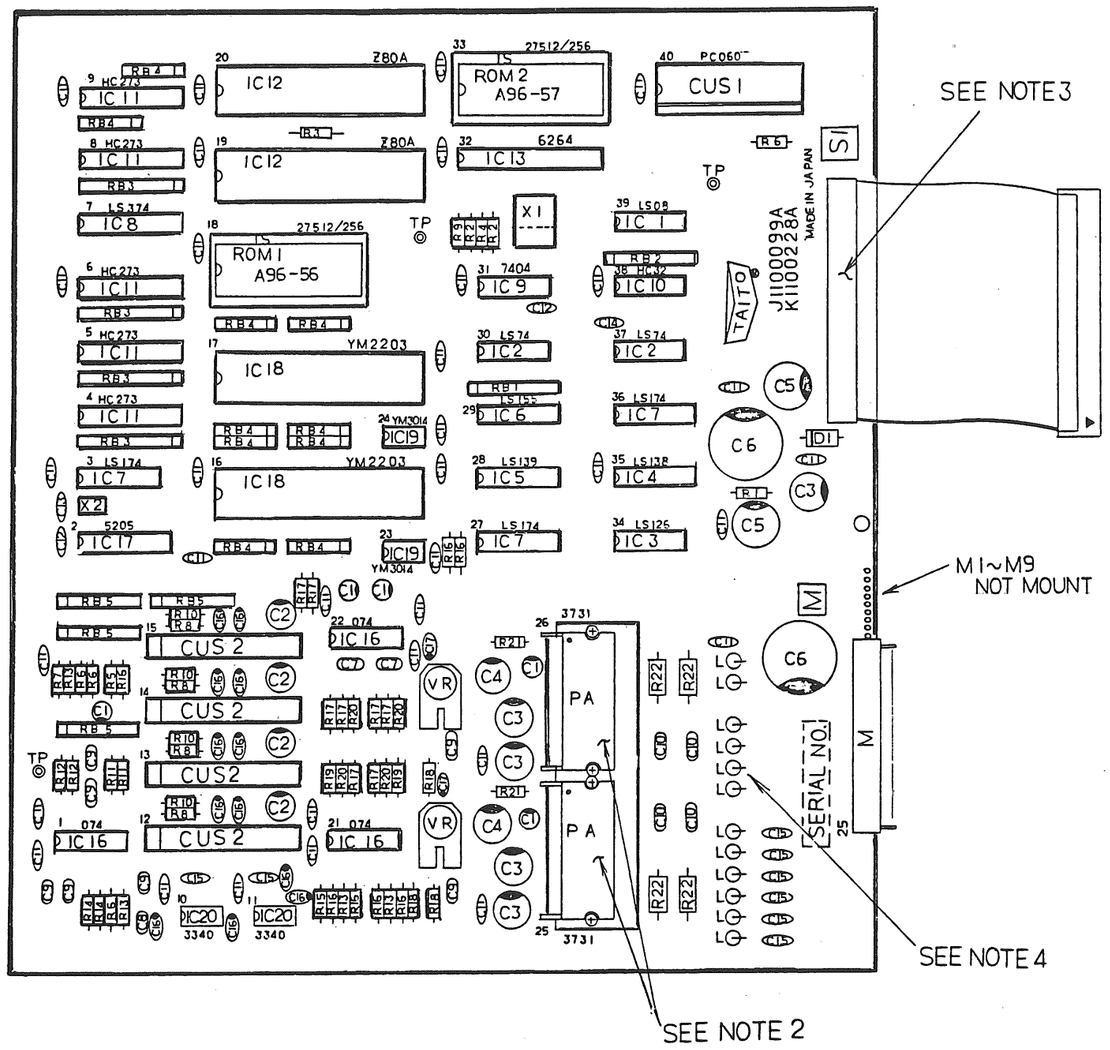

CAP. FILM
CAP. CERAMIC
R BLOCK
PC010SA
COMMON
DIODE
CATHODE
TANT DIP
ELEC BLOCK

NOTE 1 SYMBOL

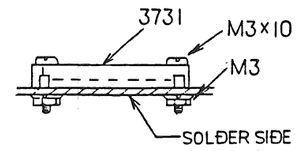

NOTE 2 P.A. 3731

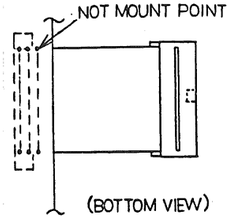

NOTE 3. S HARNESS ASSY

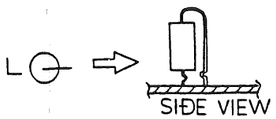

NOTE 4. BEADZ FILTER

VIDEO PCB