JUMPERS AND STUFF

REF	TYPE	DESCRIPTION	PAGE
R246	SMT	NTSC COLOR BURST	4
R202	SMT	PAL COLOR BURST	4
R625	SMT	KEYBOARD MPU CLOCK	9
R624	SMT	KEYBOARD/SYSTEM RESET	9

CONNECTORS

REF	TYPE	DESCRIPTION	PAGE
CN1	DB9P	MOUSE/JOYSTICK 1	5
CN2	DB9P	MOUSE/JOYSTICK 2	5
CN3	RCA-J	RIGHT AUDIO OUTPUT	5
CN4	RCA-J	LEFT AUDIO OUTPUT	5
CN5	DB23S	EXTERNAL FLOPPY	8
CN6	DB25P	RS232 SERIAL PORT	7
CN7	DB25S	PARALLEL PRINTER PORT	7
CN8	5Q DIN	POWER SUPPLY CONNECTOR	3
CN9	DB23P	VIDEO OUTPUT	6
CN10	RCA-J	COMPOSITE VIDEO	4
CN11	DIL-34	INTERNAL FLOPPY SIGNAL	8
CN12	SIL-4	INTERNAL FLOPPY POWER	8
CN13	MEM-30	KEYBOARD MEMBRANE	9
CN14	SIL-4	INTERNAL FLOPPY POWER	8
CN13	MEM-30	KEYBOARD MEMBRANE	9
CN14	SIL-4	KEYBOARD STATUS LED'S	9
CN15	PCMCIA	PC "MEMORY CARD"	11
P9	EDGE-80	MEMORY BUS EXPANSION	12

REVISION HISTORY

REV	DESCRIPTION	DATE	APPVL	MANAGER
0	ENGINEERING PROTOTYPE	03/13/92	GRR	
1	ADVANCE ENGINEERING RELEASE	06/26/92	GRR	
A	PILOT PRODUCTION RELEASE	09/09/92	GRR	
B	REVISED PER ECO #0495	11-13-92	DSK	

SIGNAL GLOSSARY

SIGNAL	DESCRIPTION (AREA)	PAGES
28MHZ	28.63636 MHZ MASTER CLOCK	
7MHZ	7.15909 MHZ PROCESSOR CLOCK	
A[23:1]	PROCESSOR ADDRESS BUS (68000)	
ACK	DATA ACKNOWLEDGE (PARALLEL PORT)	
AS	ADDRESS STROBE (68000)	
AUDIN	AUDIO INPUT (RS232 PORT)	
AUDOUT	AUDIO OUTPUT (RS232 JACK)	
BEER	BUS ERROR (68000)	
BG	BUS GRANT (68000)	
BGACK	BUS GRANT ACKNOWLEDGE (68000)	
BLISS	BLITTER SLOWDOWN (CHIPS)	
BLIT	CHIP MEMORY ACCESS (CHIPS)	
BR	BUS REQUEST (68000)	
BUSY	DEVICE BUSY (PARALLEL PORT)	
CASL/U	COLUMN ADDRESS STROBE (DRAM)	
CCK/CCKQ	COLOR CLOCK / QUADRATURE (CHIPS)	
CDAC	7.15909 MHZ QUADRATURE CLOCK (CHIPS)	
CHNG	MEDIA CHANGE (FLOPPY)	
CLKRD/WR	READ-TIME CLOCK READ / WRITE (RTC)	
COMP	MONOCHROME COMPOSITE VIDEO (VIDEO)	
CSYNC	COMPOSITE SYNC (VIDEO)	
CTS	CLEAR TO SEND (RS232 PORT)	
D[15:0]	PROCESSOR DATA BUS (68000)	
DIR	STEP DIRECTION (FLOPPY)	
DKRD	DISK READ DATA (FLOPPY)	
DKWD	DISK WRITE DATA (FLOPPY)	
DKWE	DISK WRITE ENABLE (FLOPPY)	
DMAL	CHIP DMA REQUEST LINE (CHIPS)	
DPA[8:0]	DRAM ADDRESS BUS (DRAM)	
DRD[15:0]	DRAM DATA BUS (DRAM)	
DSR	DATA SET READY (RS232 PORT)	
DTACK	DATA TRANSFER ACKNOWLEDGE (68000)	
DTR	DATA TERMINAL READY (RS232 PORT)	
E	PERIPHERAL ENABLE CLOCK (68000)	
EXTICK	EXPANSION PRESENT / RTC TICK	
FC[2:0]	FUNCTION CODE (68000)	
FIREQ/1	FIRE BUTTON 0/1 (JOYSTICKS)	
HLT	PROCESSOR HALT (68000)	
HSYNC	HORIZONTAL SYNC (VIDEO)	
INDEX	INDEX PULSE (FLOPPY)	
INT[2,3,6]	INTERRUPT REQUEST (CHIPS)	
IORESET	I/O RESET	
IPL[2:0]	INTERRUPT PRIORITY LEVEL (68000)	
KBCLOCK	KEYBOARD CLOCK (KEYBOARD)	
KBDATA	KEYBOARD DATA (KEYBOARD)	
KBRESET	KEYBOARD RESET (KEYBOARD)	
LDS/UDS	UPPER / LOWER DATA STROBES (68000)	
LED	POWER ON LED / AUDIO FILTER DISABLE	
LEFT/RIGHT	LEFT RIGHT AUDIO (AUDIO)	

SIGNAL	DESCRIPTION (AREA)	PAGES
LPEN	LIGHT PEN TRIGGER (JOYSTICKS)	
MTR	MOTOR ON (FLOPPY)	
MTR0	MOTOR ON - DRIVE 0 (FLOPPY)	
MOV/MOH	MOUSE 0 QUADRATURE V/H (JOYSTICKS)	
MIV/MIH	MOUSE 1 QUADRATURE V/H (JOYSTICKS)	
OVL	OVERLAY ROM OVER RAM	
OVR	OVERRIDE SYSTEM DECODING	
PIXELSW	GENLOCK PIXEL SWITCH (VIDEO)	
POT0X/0Y	POT LINES 0 X/Y (JOYSTICKS)	
POT1X/1Y	POT LINES 1 X/Y (JOYSTICKS)	
POUT	PAPER OUT (PARALLEL PORT)	
PPD[7:0]	PARALLEL PORT DATA (PARALLEL PORT)	
RAMEN	RAM ENABLE (CHIPS)	
REGEN	CHIP REGISTER ENABLE (CHIPS)	
RAS0/1	ROW ADDRESS STROBE (DRAM)	
RDY	DRIVE READY (FLOPPY)	
RESET	GENERAL RESET	
RGA[8:1]	REGISTER ADDRESS BUS (CHIPS)	
R/G/B	RED / GREEN / BLUE (VIDEO)	
RI	RING INDICATE (RS232 PORT)	
ROMEN	ROM ENABLE (ROM)	
RTS	REQUEST TO SEND (RS232 PORT)	
RST	PROCESSOR RESET (68000)	
RXD	RECEIVE DATA (RS232 PORT)	
RW	PROCESSOR READ/WRITE (68000)	
SEL	SELECT (PARALLEL PORT)	
SEL[3:0]	DRIVE SELECT (FLOPPY)	
SIDE	SIDE SELECT (FLOPPY)	
STEP	STEP IN/OUT COMMAND (FLOPPY)	
TRK0	TRACK ZERO SENSE (FLOPPY)	
TXD	TRANSMIT DATA (RS232 PORT)	
VMA	VALID MEMORY ADDRESS (68000)	
VPA	VALID PERIPHERAL ADDRESS (68000)	
VSYNC	VERTICAL SYNC (VIDEO)	
WE	WRITE ENABLE (DRAM)	
WPRO	WRITE PROTECT SENSE (FLOPPY)	
XCLK	EXTERNAL GENLOCK CLOCK (VIDEO)	
XCLKEN	EXTERNAL CLOCK ENABLE (VIDEO)	
XRDY	EXTERNAL DATA READY	
	** CREDIT CARD AND IDE STUFF? **	

KEY COMPONENTS

REF	CHIP	DESCRIPTION	PAGE
U1	68000	68000 PROCESSOR 16MHZ	2
U2	8374	ALICE (AA AGNUS)	2
U3	8364	PAULA	5
U4	4203	LISA (AA DENISE)	4
U5	F023A	PA GAYLE (CBM ASIC)	2,8,11
U6	ASST	ROM 512KX16, 150 NS	10
U7	8520	AMIGA VIA, 1 MHZ	7
U8-11	28F10	FLASH MEMORY 128KX8	10
U12	CXA1145	SONY VIDEO ENCODER	4
U14	68HC05	AMIGA KEYBOARD MPU	9
U43	PST518	LOW VOLTAGE SENSE IC	9
U15	LF347	BIMOS OP-AMP	5
	TL084	BICMOS OP-AMP	ALT
U16-17	ASST	DRAM 256KX16, 80NS	3
U18-19	ASST	DRAM 256KX16 OPTIONAL	3
U20	391227	BUDGIE (ASIC)	2
U28	1488	EIA LINE DRIVER	7
U29	1489	EIA LINE RECEIVER	7
U30	8701	TRIPLE 8-BIT VIDEO DAC	4
X1	OSC	TTL 28.63636 MHZ NTSC	2
	OSC	TTL 28.37512 MHZ PAL	ALT
Y4,61	XTAL	4.43619MHZ PAL BURST	4
Y5,21	XTAL	3MHZ CERAMIC RESONATOR	9
X2	ASST	PAL VIDEO MODULATOR	4
	ASST	NTSC VIDEO MODULATOR	4

A1200 REV 1->1D PCB

DIRECTORIES AND REVISION HISTORY

© 1992 COMMODORE BUSINESS MACHINES
INFORMATION CONTAINED HEREIN IS THE UNPUBLISHED CONFIDENTIAL AND TRADE SECRET PROPERTY OF COMMODORE BUSINESS MACHINES, INC. ANY USE, REPRODUCTION OR DISCLOSURE OF THIS INFORMATION WITHOUT THE PRIOR WRITTEN PERMISSION OF COMMODORE IS STRICTLY PROHIBITED.

C.A.D. GENERATED
NO MANUAL CHANGES MAY BE MADE TO THIS DOCUMENT

COMMODORE
SCHEMATIC A1200 RIO
A/A1200 MAIN BOARD
"CHANNEL 2"
DWG# C364717 6
SCALE
SHEET 1 OF 13

CHANNEL Z
10/10/92

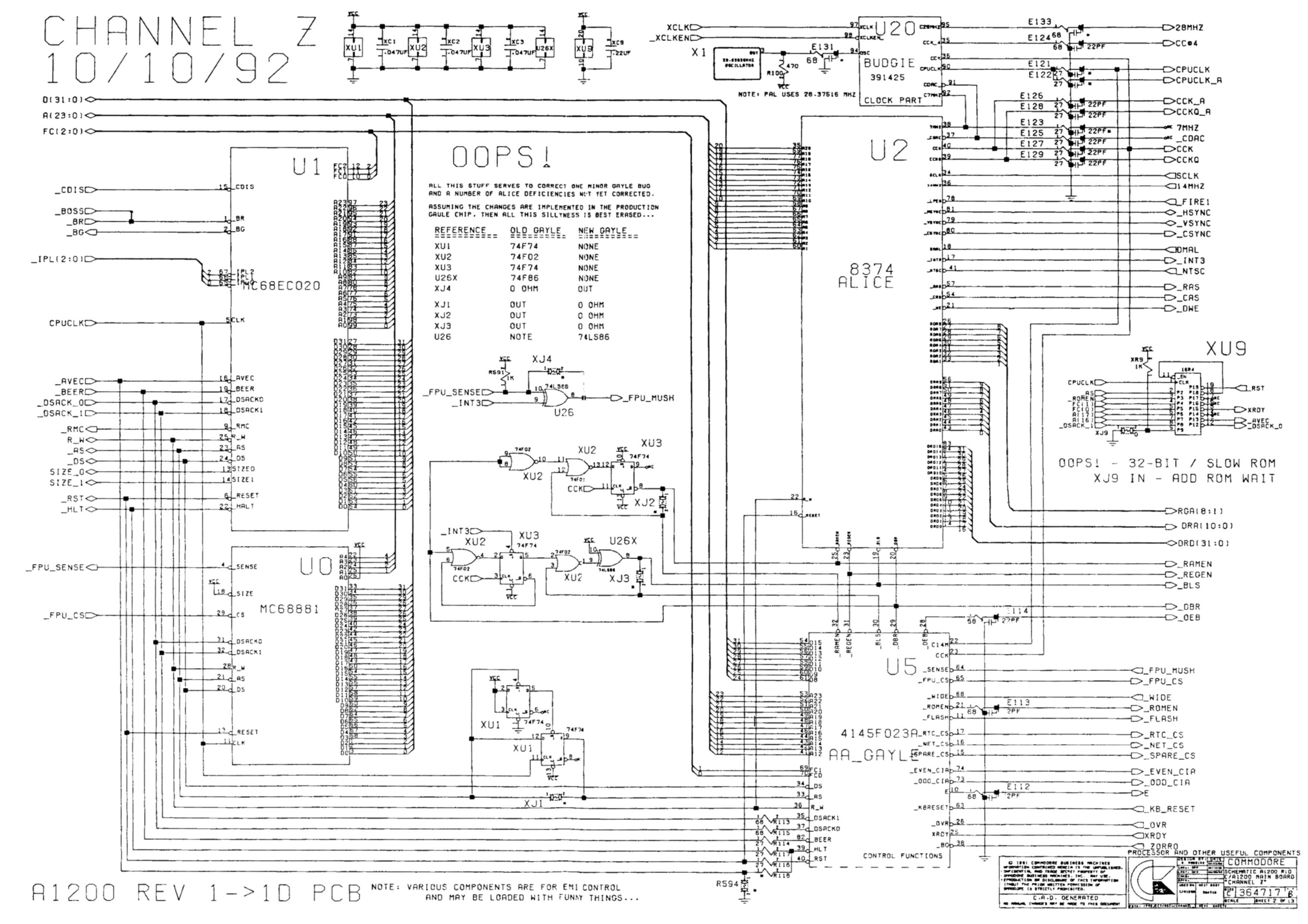

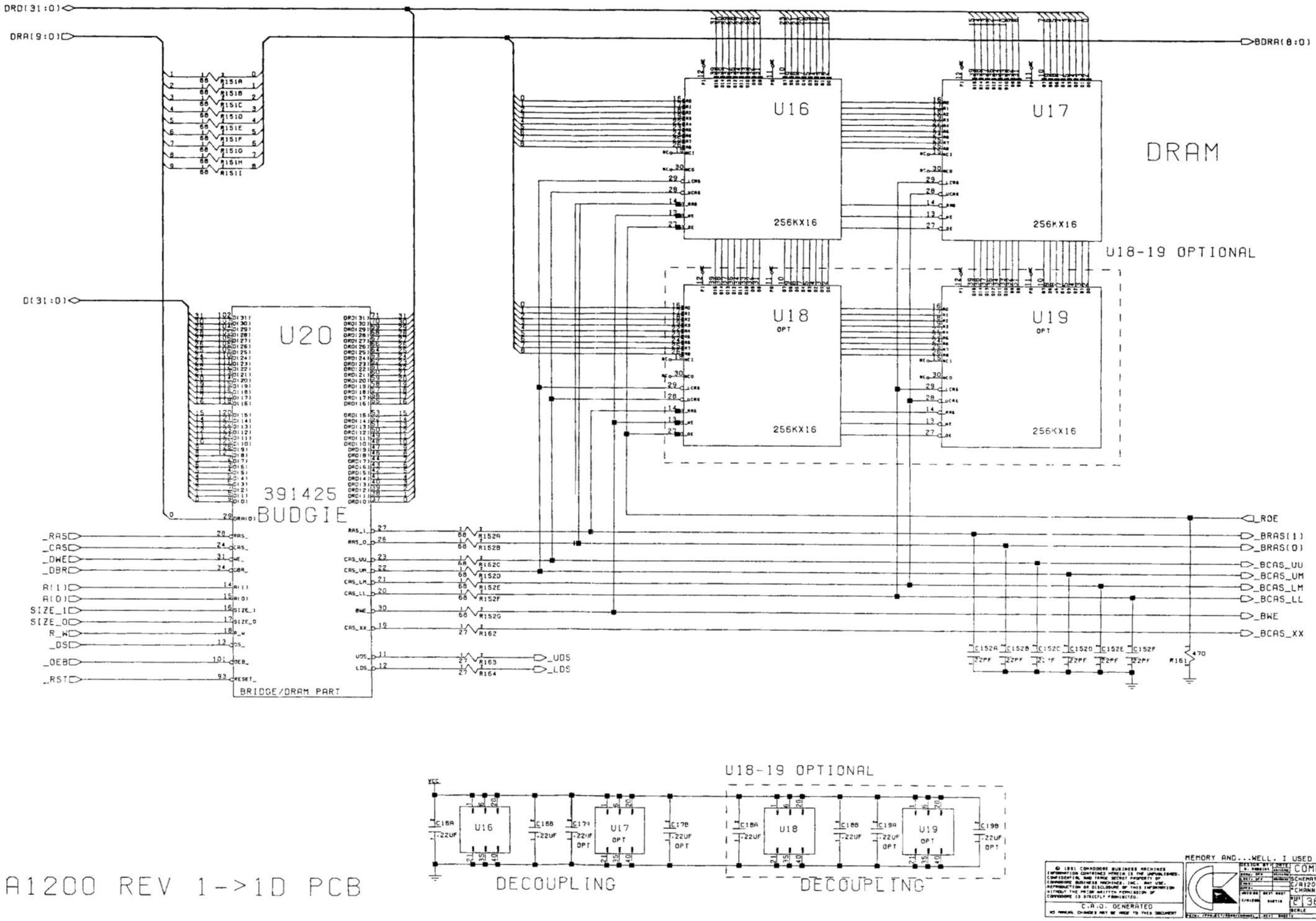
DRD(31:0)
DRA(9:0)
BDRA(8:0)
D(31:0)
U16
U17
U18
U19
OPT
256KX16
DRAM
U18-19 OPTIONAL
U20
391425
BUDGIE
BRIDGE/DRAM PART
_RAS
_CAS
_DWE
_DBR
A(1)
A(0)
SIZE_1
SIZE_0
R_W
_DS
_OEB
_RST
_UDS
_LDS
_RDE
_BRAS(1)
_BRAS(0)
_BCAS_UU
_BCAS_UM
_BCAS_LM
_BCAS_LL
_BWE
_BCAS_XX
U18-19 OPTIONAL
DECOUPLING
DECOUPLING
A1200 REV 1->1D PCB
MEMORY AND...WELL, I USED TO REMEMBER
COMMODORE
SCHEMATIC A1200 RID
C/A1200 MAIN BOARD
"CHANNEL 2"
364717
C.A.D. GENERATED

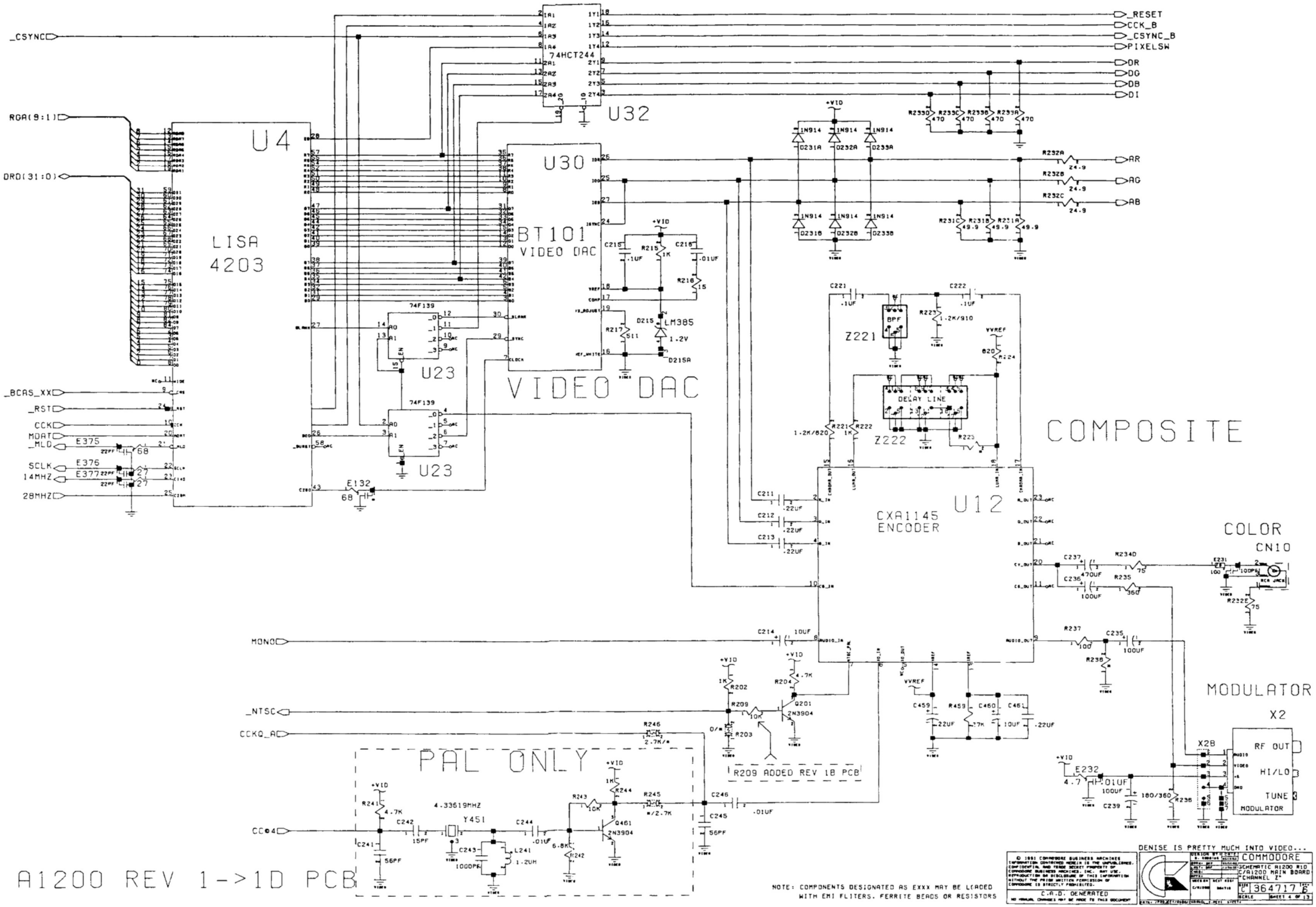
_CSYNC
RGA(9:1)
DRD(31:0)
U4
LISA
4203
U32
74HCT244
_RESET
CCK_B
_CSYNC_B
PIXELSW
DR
DG
DB
DI
U30
BT101
VIDEO DAC
VIDEO DAC
AR
AG
AB
U23
74F139
U23
74F139
_BCAS_XX
_RST
CCK
MDAT
_MLD
SCLK
14MHZ
28MHZ
E375
E376
E377
E132
Z221
Z222
DELAY LINE
U12
CXA1145
ENCODER
COMPOSITE
COLOR
CN10
MONO
_NTSC
CCKQ_A
R209 ADDED REV 1B PCB
PAL ONLY
4.43619MHZ
Y451
MODULATOR
X2
RF OUT
HI/LO
TUNE
MODULATOR
DENISE IS PRETTY MUCH INTO VIDEO...
NOTE: COMPONENTS DESIGNATED AS Exxx MAY BE LOADED WITH EMI FLITERS, FERRITE BEADS OR RESISTORS
C.A.D. GENERATED
COMMODORE
SCHEMATIC A1200 R1D
C/A1200 MAIN BOARD
"CHANNEL Z"
364717 B
SHEET 4 OF 13
A1200 REV 1->1D PCB

MOUSE/JOYSTICK PORTS

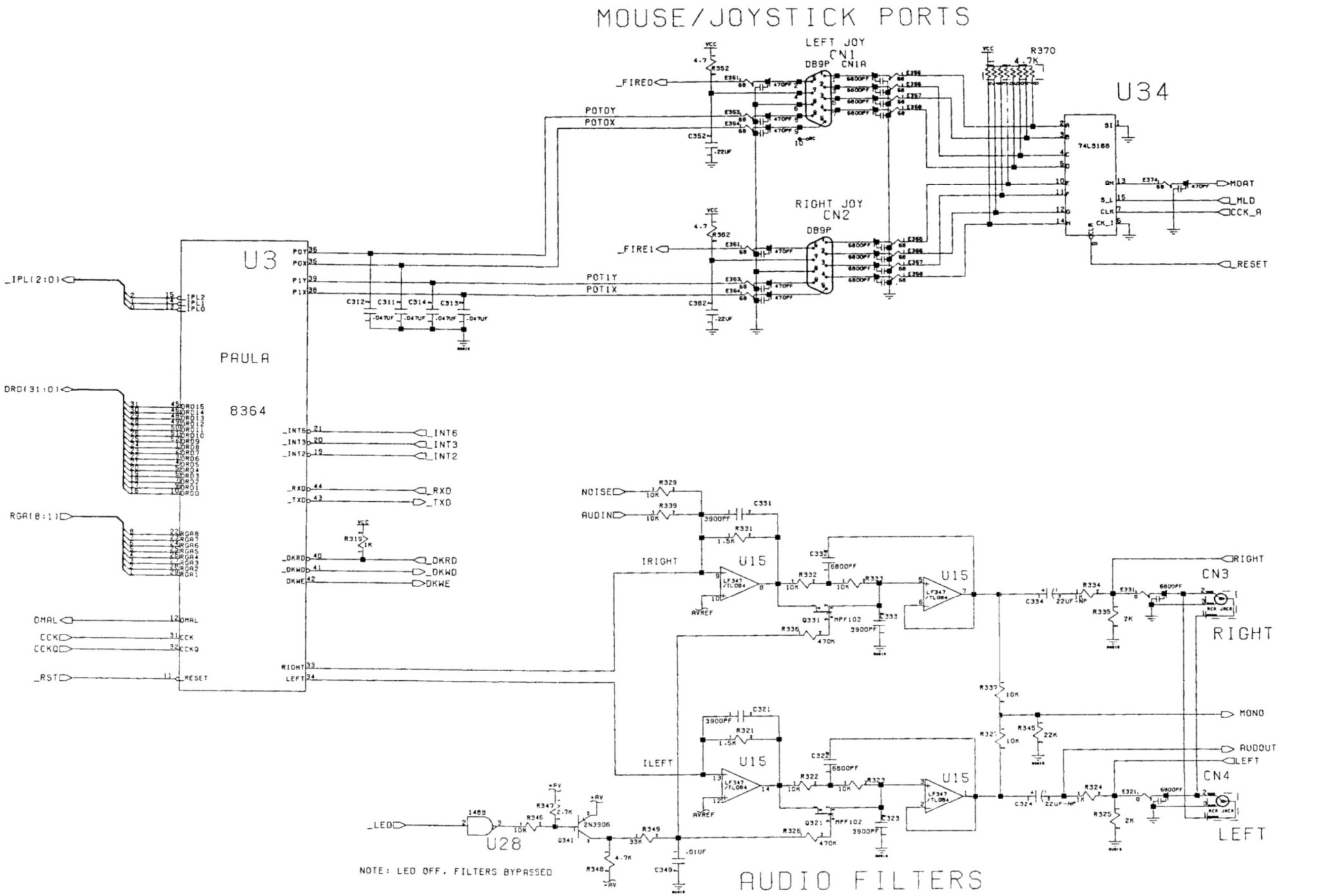

A1200 REV 1->1D PCB

PAULA PREFERS THE TRADITIONAL MODES

© 1991 COMMODORE BUSINESS MACHINES
INFORMATION CONTAINED HEREIN IS THE UNPUBLISHED, CONFIDENTIAL AND TRADE SECRET PROPERTY OF COMMODORE BUSINESS MACHINES, INC. ANY USE, REPRODUCTION OR DISCLOSURE OF THIS INFORMATION WITHOUT THE PRIOR WRITTEN PERMISSION OF COMMODORE IS STRICTLY PROHIBITED.

C.A.D. GENERATED
NO MANUAL CHANGES MAY BE MADE TO THIS DOCUMENT

COMMODORE
SCHEMATIC A1200 MID
C/A1200 MAIN BOARD
CHANNEL 2
SIZE C 364717 B
SCALE SHEET 5 OF 13

GENERAL DECOUPLING

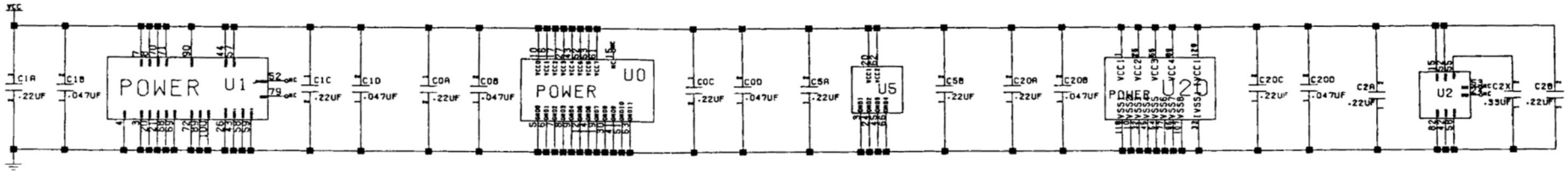

VIDEO DECOUPLING

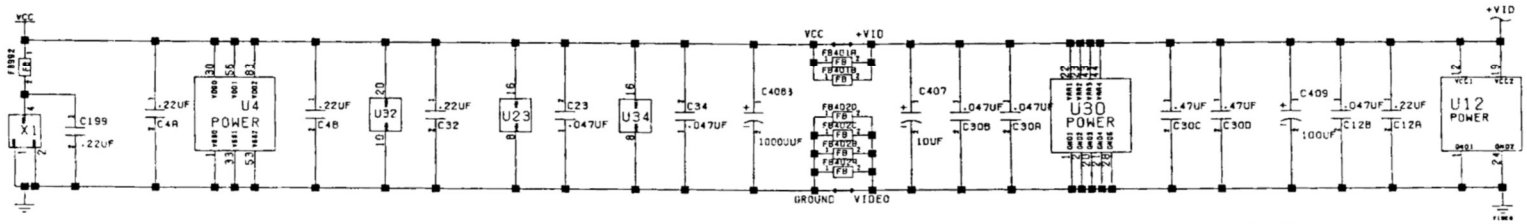

NOTE: AS OF REV 1C, LOGIC AND VIDEO GOUND AND POWER ARE THE SAME NET, BUT REQUTED DISCRETELY EXCEPT AT DAC1

ALSO ADDED C30C AND C30D FOR OVERKILL DAC DECOUPLING.

AUDIO DECOUPLING

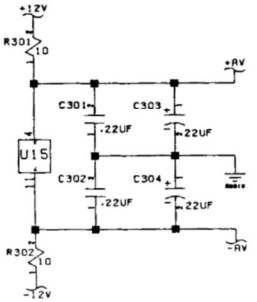

VIDEO OUT

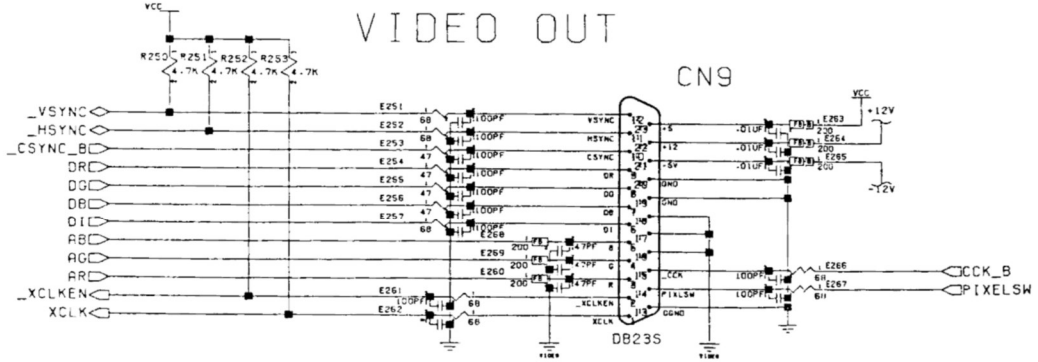

AUDIO POWER

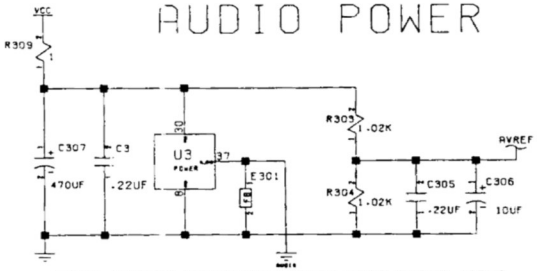

NOTE: GROUND INTERCONNECTION NEAR AUDIO JACKS.

A1200 REV 1->1D PCB

PARTY OUT OF BOUNDS, WHAT A MESS...

© 1991 COMMODORE BUSINESS MACHINES
INFORMATION CONTAINED HEREIN IS THE UNPUBLISHED, CONFIDENTIAL AND TRADE SECRET PROPERTY OF COMMODORE BUSINESS MACHINES, INC. ANY USE, REPRODUCTION OR DISCLOSURE OF THIS INFORMATION WITHOUT THE PRIOR WRITTEN PERMISSION OF COMMODORE IS STRICTLY PROHIBITED.
C.A.D. GENERATED
NO MANUAL CHANGES MAY BE MADE TO THIS DOCUMENT

COMMODORE
SCHEMATIC A1200 R1D
C/A1200 MAIN BOARD
"CHANNEL 1"
C 364717 B
SCALE SHEET 6 OF 13

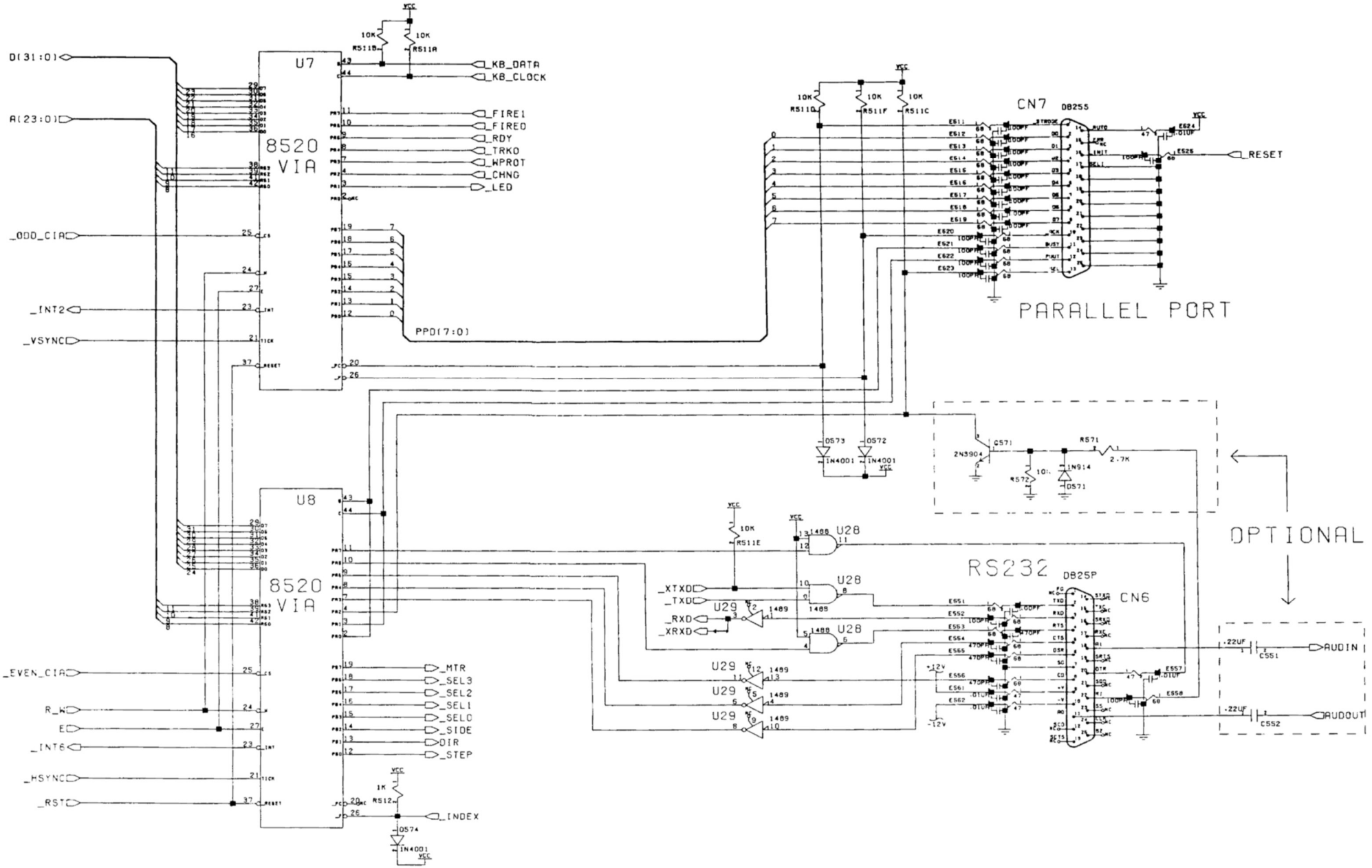

A1200 REV 1->1D PCB

SERIAL AND PARALLEL PORTS

© 1991 COMMODORE BUSINESS MACHINES
INFORMATION CONTAINED HEREIN IS THE UNPUBLISHED, CONFIDENTIAL AND TRADE SECRET PROPERTY OF COMMODORE BUSINESS MACHINES, INC. ANY USE, REPRODUCTION OR DISCLOSURE OF THIS INFORMATION WITHOUT THE PRIOR WRITTEN PERMISSION OF COMMODORE IS STRICTLY PROHIBITED.
C.A.D. GENERATED
NO MANUAL CHANGES MAY BE MADE TO THIS DOCUMENT

COMMODORE
SCHEMATIC A1200 R1D
C/A1200 MAIN BOARD
"CHANNEL 2"
C 364717 E
SHEET 7 OF 13

FLOPPY LOGIC

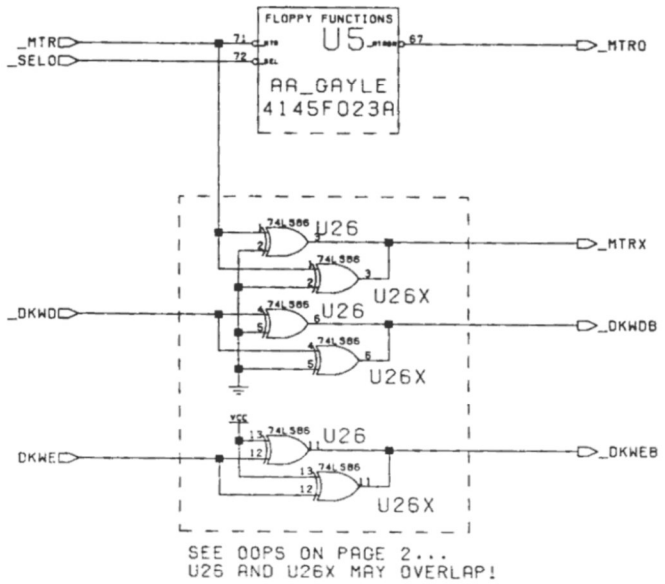

SEE OOPS ON PAGE 2...
U26 AND U26X MAY OVERLAP!

INTERNAL FLOPPY

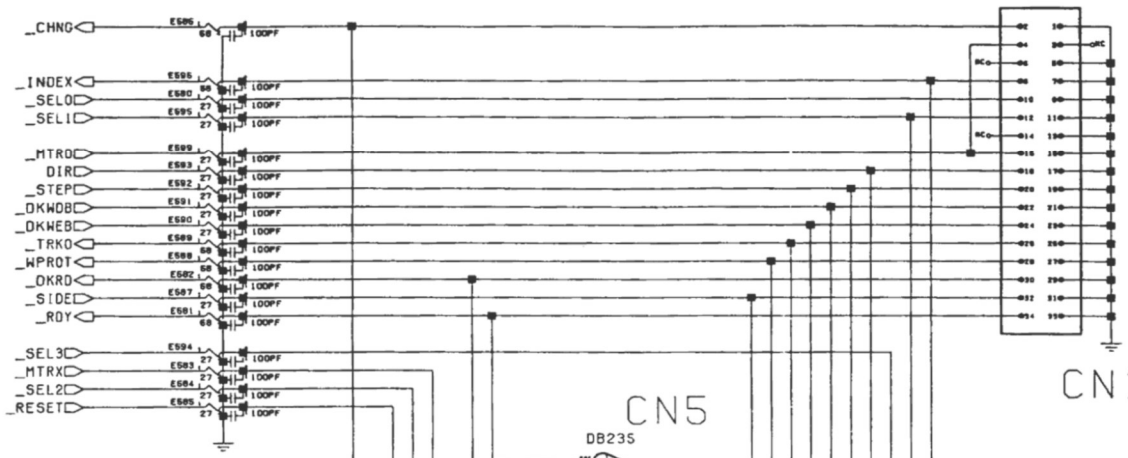

EXTERNAL FLOPPY

FLOPPY POWER

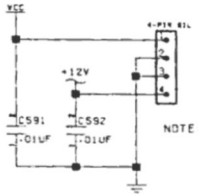

CN12

NOTE: SOME DRIVES ARE +5 ONLY...

DECOUPLING

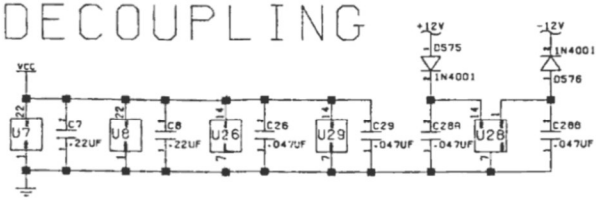

A1200 REV 1->1D PCB

THE REST OF THE FLOPPY STUFF

© 1991 COMMODORE BUSINESS MACHINES
IN OPERATION CONTAINED HEREIN IS THE UNPUBLISHED, CONFIDENTIAL AND TRADE SECRET PROPERTY OF COMMODORE BUSINESS MACHINES, INC. ANY USE, REPRODUCTION OR DISCLOSURE OF THIS INFORMATION WITHOUT THE PRIOR WRITTEN PERMISSION OF COMMODORE IS STRICTLY PROHIBITED.

C.A.D. GENERATED
NO MANUAL CHANGES MAY BE MADE TO THIS DOCUMENT

COMMODORE
SCHEMATIC A1200 R1D
C/A1200 MAIN BOARD
"CHANNEL Z"
C 364717 B
SCALE
SHEET 8 OF 13

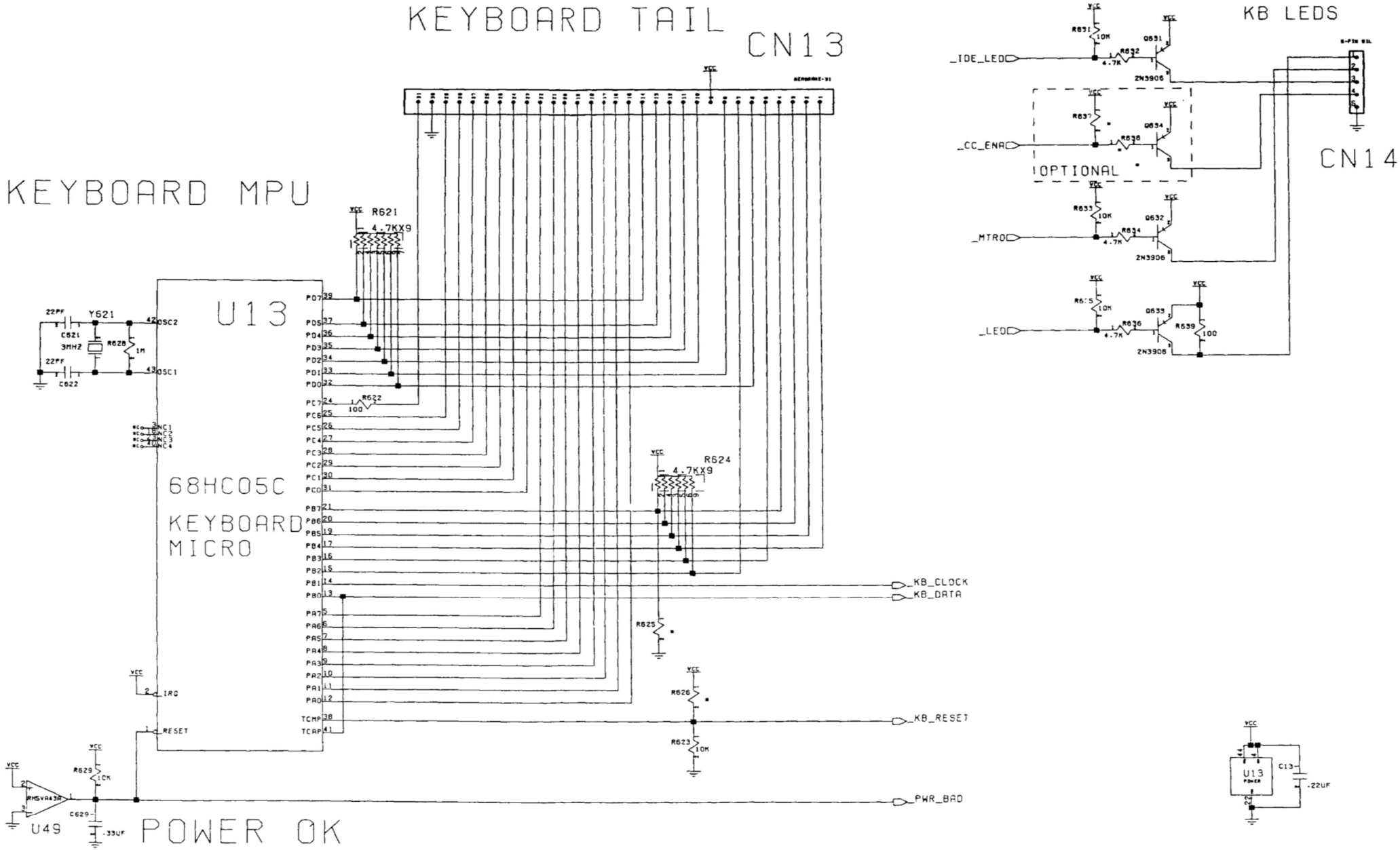

A1200 REV 1->1D PCB

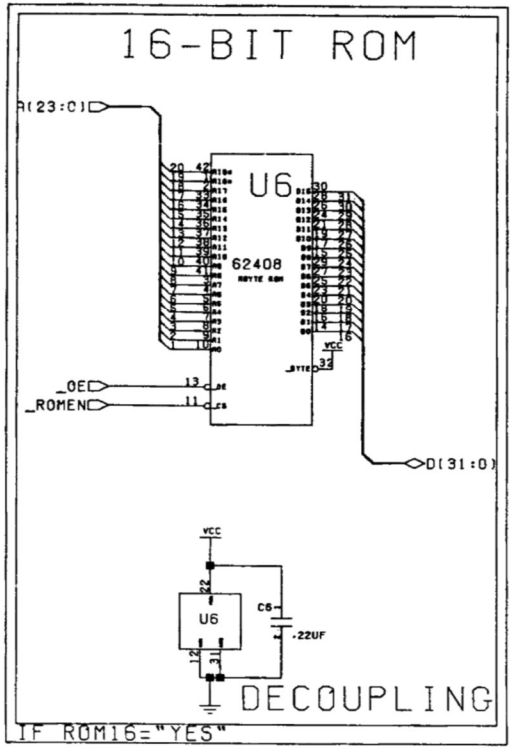

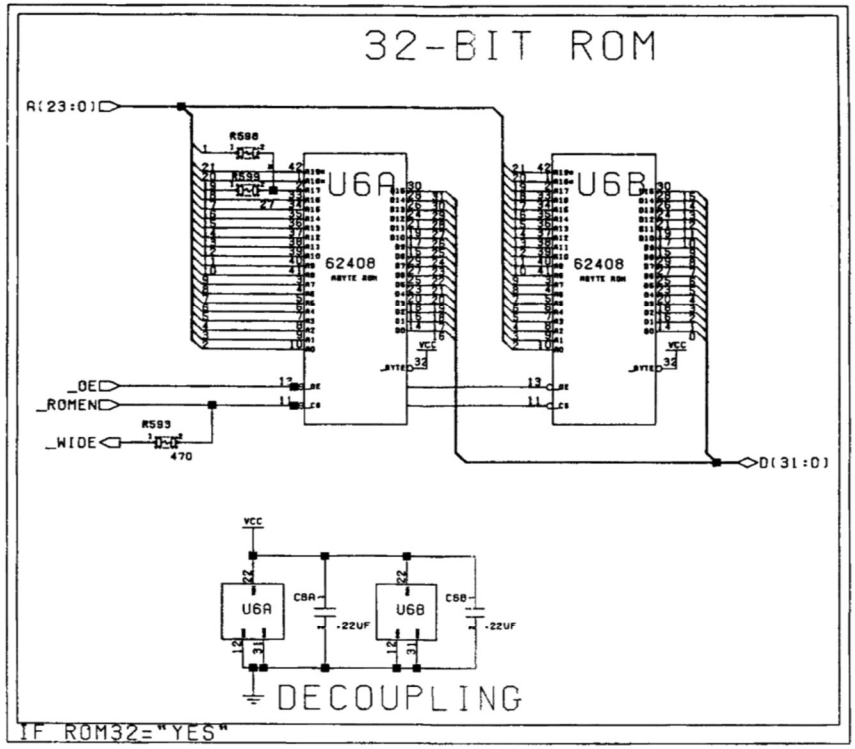

16 AND 32-BIT SOCKETS MAY OVERLAP!

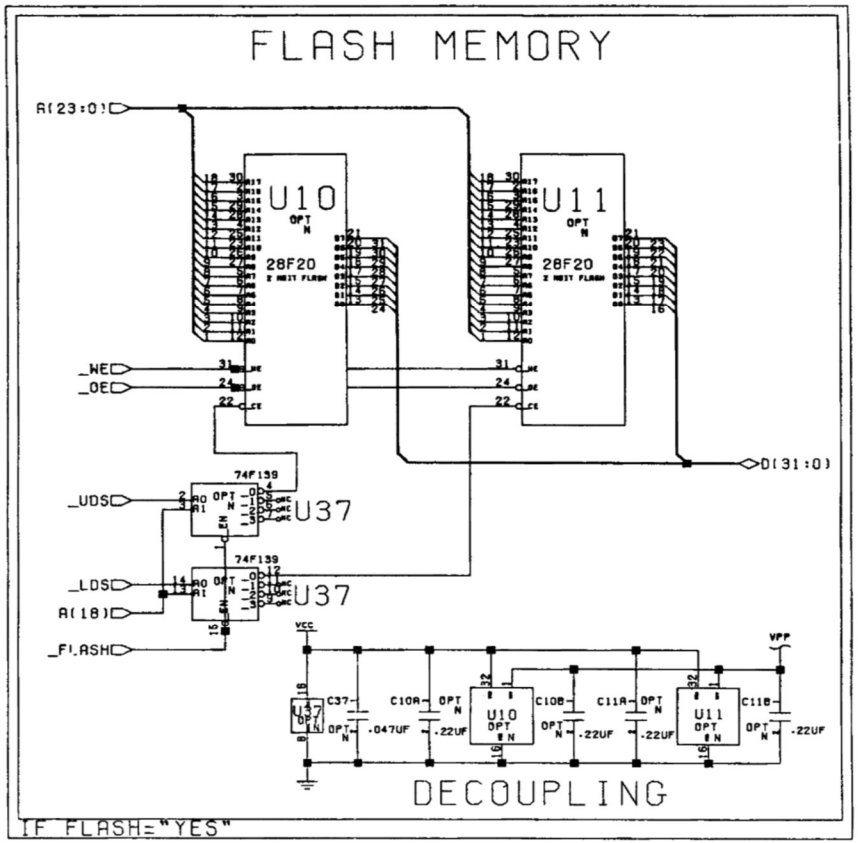

OPTIONAL FLASH MEMORY

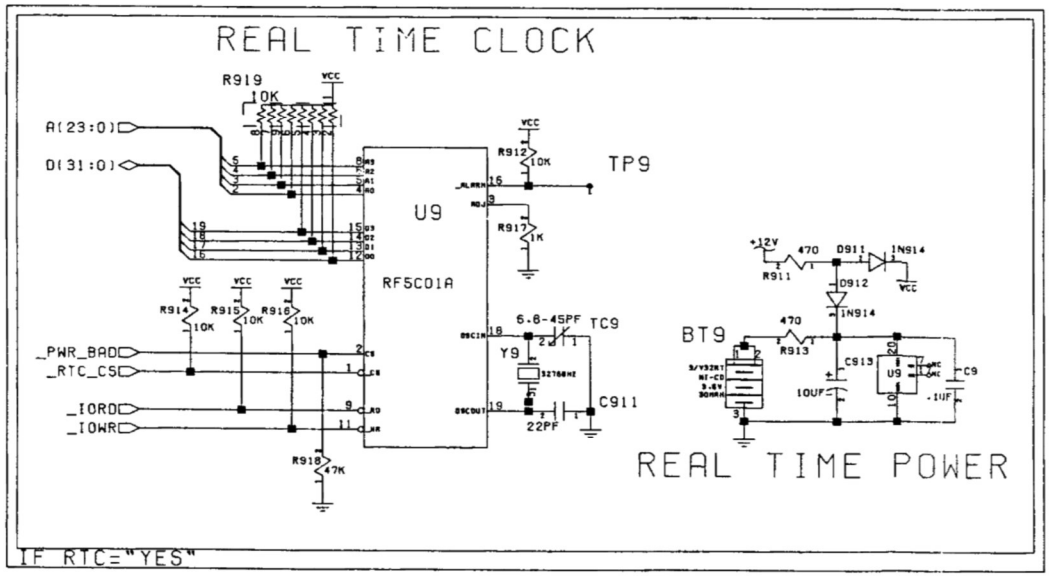

OPTIONAL REAL-TIME CLOCK/CALENDAR

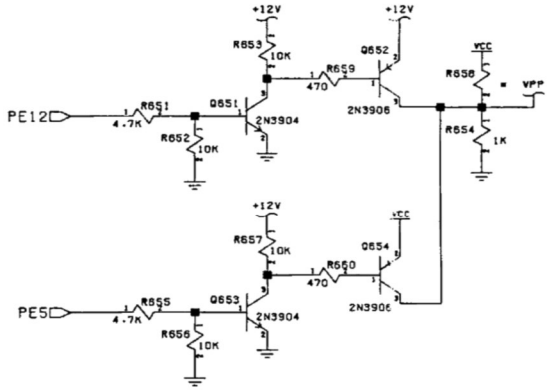

A1200 REV 1->1D PCB

© 1991 COMMODORE BUSINESS MACHINES
INFORMATION CONTAINED HEREIN IS THE UNPUBLISHED, CONFIDENTIAL AND TRADE SECRET PROPERTY OF COMMODORE BUSINESS MACHINES, INC. MAY USE, REPRODUCTION OR DISCLOSURE OF THIS INFORMATION WITHOUT THE PRIOR WRITTEN PERMISSION OF COMMODORE IS STRICTLY PROHIBITED.
C.A.D. GENERATED
NO MANUAL CHANGES MAY BE MADE TO THIS DOCUMENT

ROM - PLAIN AND FANCY - DODADS TOO!

COMMODORE
SCHEMATIC A1200 RLD
C/A1200 MAIN BOARD
"CHANNEL Z"
PART# C 364717
SCALE
SHEET 10 OF 11

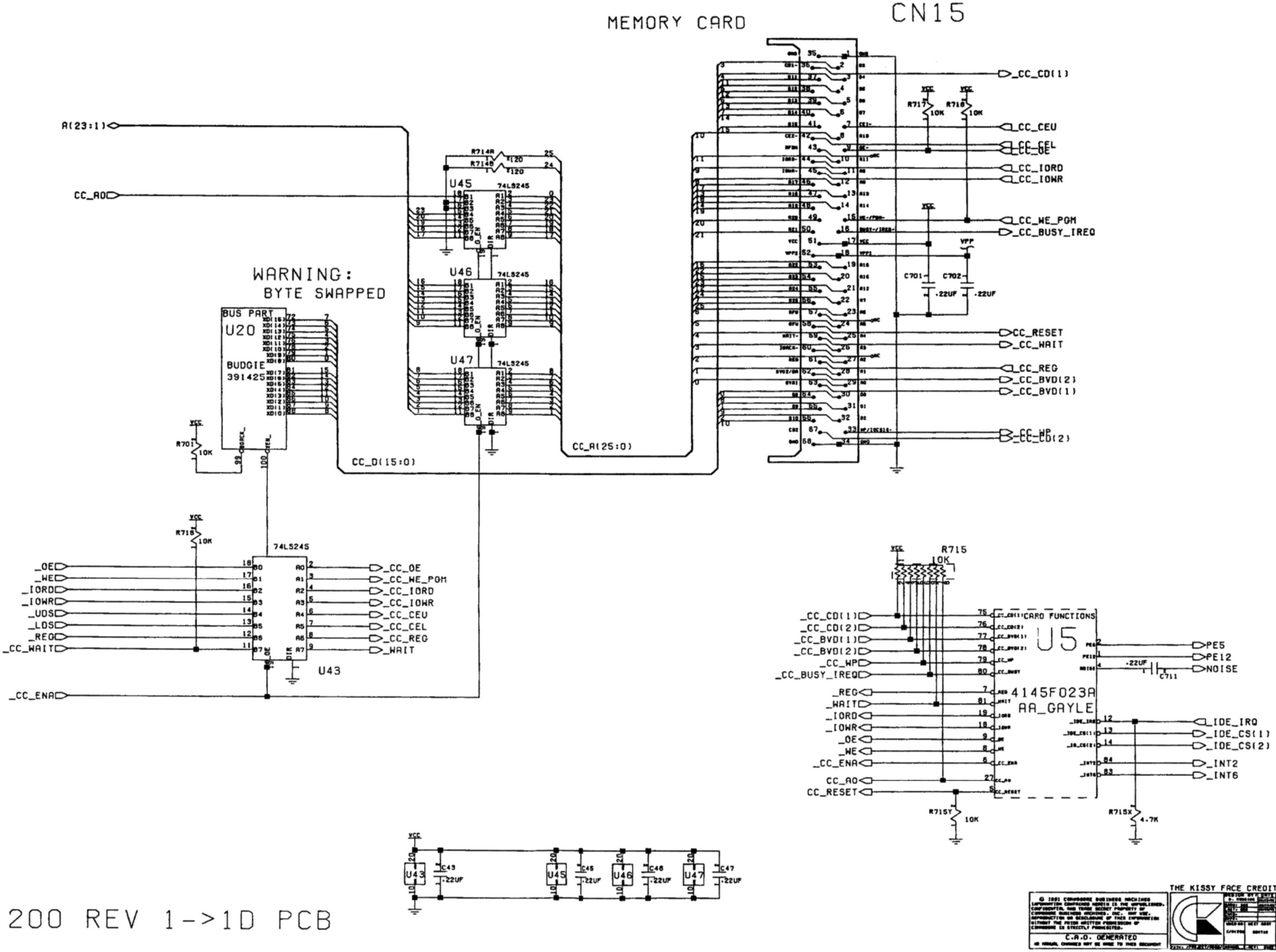

A1200 REV 1->1D PCB

THE KISSY FACE CREDIT CARD MONSTER

© 1991 COMMODORE BUSINESS MACHINES
INFORMATION CONTAINED HEREIN IS THE UNPUBLISHED CONFIDENTIAL AND TRADE SECRET PROPERTY OF COMMODORE BUSINESS MACHINES, INC. ANY USE, REPRODUCTION OR DISCLOSURE OF THIS INFORMATION WITHOUT THE PRIOR WRITTEN PERMISSION OF COMMODORE IS STRICTLY PROHIBITED.
C.A.D. GENERATED
NO MANUAL CHANGES MAY BE MADE TO THIS DOCUMENT

COMMODORE
SCHEMATIC A1200 RIO
C/A1200 MAIN BOARD
"CHANNEL Z"
C 364717 B
SCALE
SHEET 11 OF 13

MEMORY EXPANSION

IDE DRIVE

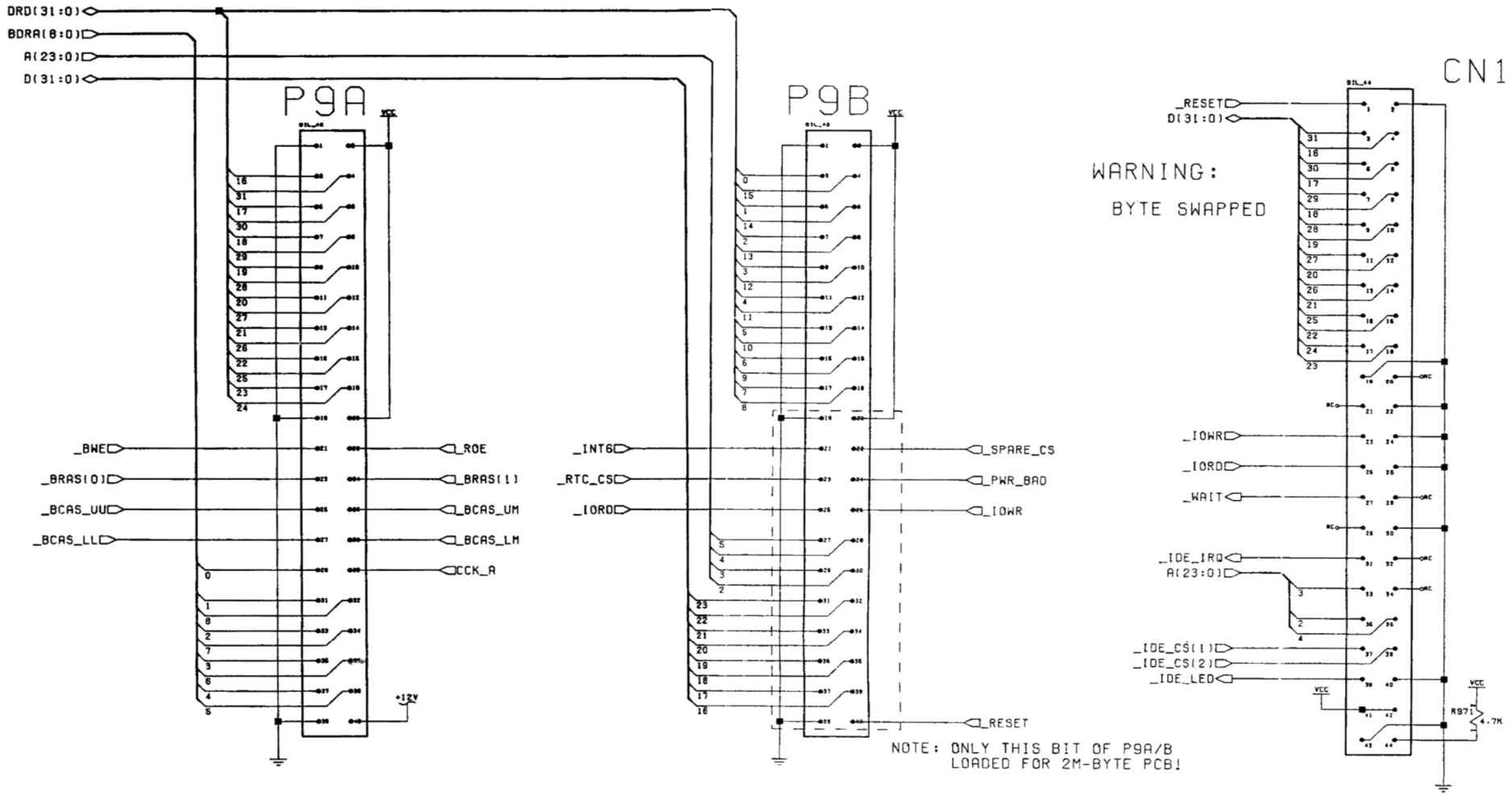

A1200 REV 1->1D PCB

© 1991 COMMODORE BUSINESS MACHINES
INFORMATION CONTAINED HEREIN IS THE UNPUBLISHED, CONFIDENTIAL AND TRADE SECRET PROPERTY OF COMMODORE BUSINESS MACHINES, INC. ANY USE, REPRODUCTION OR DISCLOSURE OF THIS INFORMATION WITHOUT THE PRIOR WRITTEN PERMISSION OF COMMODORE IS STRICTLY PROHIBITED.
C.A.D. GENERATED
NO MANUAL CHANGES MAY BE MADE TO THIS DOCUMENT

MEMORY EXPANSION AND THE IDE DRIVE

COMMODORE

SCHEMATIC A1200 RID
C/A1200 MAIN BOARD
"CHANNEL 2"

SIZE C 364717 B

SCALE

SHEET 12 OF 13

EXPANSION CONNECTOR

P1

A(31:0)
D(31:0)
VCC
_IPL(2:0)
FC(2:0)
_RST
_ECS
SIZE_1
_AS
R_W
_STERM
_DSACK_1
CPUCLK_A
_CDIS
DELETED R18 PCB
_CIIN
_CBREQ
_BR
_BGACK
_FPU_CS
CCK_A
_NET_CS
_RTC_CS
_REG
_WAIT
_IORD
_OE
_OVR
_ZORRO
_INT2
SYSTEM_1
SYSTEM_0
_CONFIG_OUT
_XRXD
LEFT
+12V
-12V
EDGE_150
_IPEIND
_HLT
_OCS
SIZE_0
_DS
_BEER
_AVEC
_DSACK_0
E
_RMC
_CIOUT
_CBACK
_BG
_BOSS
_FPU_SENSE
_RESET
_SPARE_CS
_FLASH
_CC_ENA
_KB_RESET
_IOWR
_WE
XRDY
_WIDE
_INT6
_XTXD
RIGHT

POWER INPUT

CN8

5-PIN SQ

LF1 LINE FILTER
LF1A
LF1B
LF1C
LF1D
+12 GND -12V
SW +5
C800 .01UF
C802 .01UF
C821 47UF
+12V
C803 .01UF
C822 47UF
-12V
C801 .01UF
C804 .22UF
C811 1000UF
VCC

NOTE: HEAVY LINES INDICATE A SINGLE POINT CONNECTION

HOLES &C.

CN1
CN2
CN5
CN6
CN7
CN9
CN15
MT1
MT2
MT3
MT4
MT5
MT6
MT7
MT8
V1
V2
V3
V4
V5
V6
V7
V8
V9
V10
V11
V12
V13
V14
V15

TEST ACCESS

10-PIN SIL

TP1
CPUCLK
_AS
_DS
R_W
_DSACK_0
_DSACK_1
_ROMEN
_CDIS
_KB_RESET

TP2
CCK
CCKQ
_RAMEN
_REGEN
_BLS
_OEB
_RAS
_CAS
_DWE

TP3
RGA(8:1)
_DBR

SYSTEM CONFIGURATION BITS

SYSTEM	1	0	CPU/CPUCLK
	0	0	EC020/14MHZ
	0	1	020/14MHZ
	1	0	030/14MHZ
	1	1	030/>14MHZ

TERMINATION

VCC
_HLT
_RST
SIZE_0
SIZE_1
R_W
_AS
_DS
_DSACK_0
_DSACK_1
_BEER
_AVEC
_CDIS
_BR
_IPL(2:0)
FC(2:0)
_INT6
_INT2
_OVR
XRDY
_ZORRO
_WIDE
4.7K
470
1K
R951A
R951B
R951C
R951D
R951E
R951F
R951G
R952A
R952B
R101
R103
R102
R104
R953A
R953B
R953C
R953D
R953E
R953F
R954A
R954B
R954C
R954D
R954E
R592

A1200 REV 1->1D PCB

POWER DISTRIBUTION AND DECOUPLING

© 1991 COMMODORE BUSINESS MACHINES
INFORMATION CONTAINED HEREIN IS THE EXCLUSIVE, CONFIDENTIAL AND TRADE SECRET PROPERTY OF COMMODORE BUSINESS MACHINES, INC. ANY USE, REPRODUCTION OR DISCLOSURE OF THIS INFORMATION WITHOUT THE PRIOR WRITTEN PERMISSION OF COMMODORE IS STRICTLY PROHIBITED.
C.A.D. GENERATED
NO MANUAL CHANGES MAY BE MADE TO THIS DOCUMENT

COMMODORE
SCHEMATIC A1200 R1D
C/A1200 MAIN BOARD
"CHANNEL 2"
364717 B
SCALE
SHEET 13 OF 13

Gayle

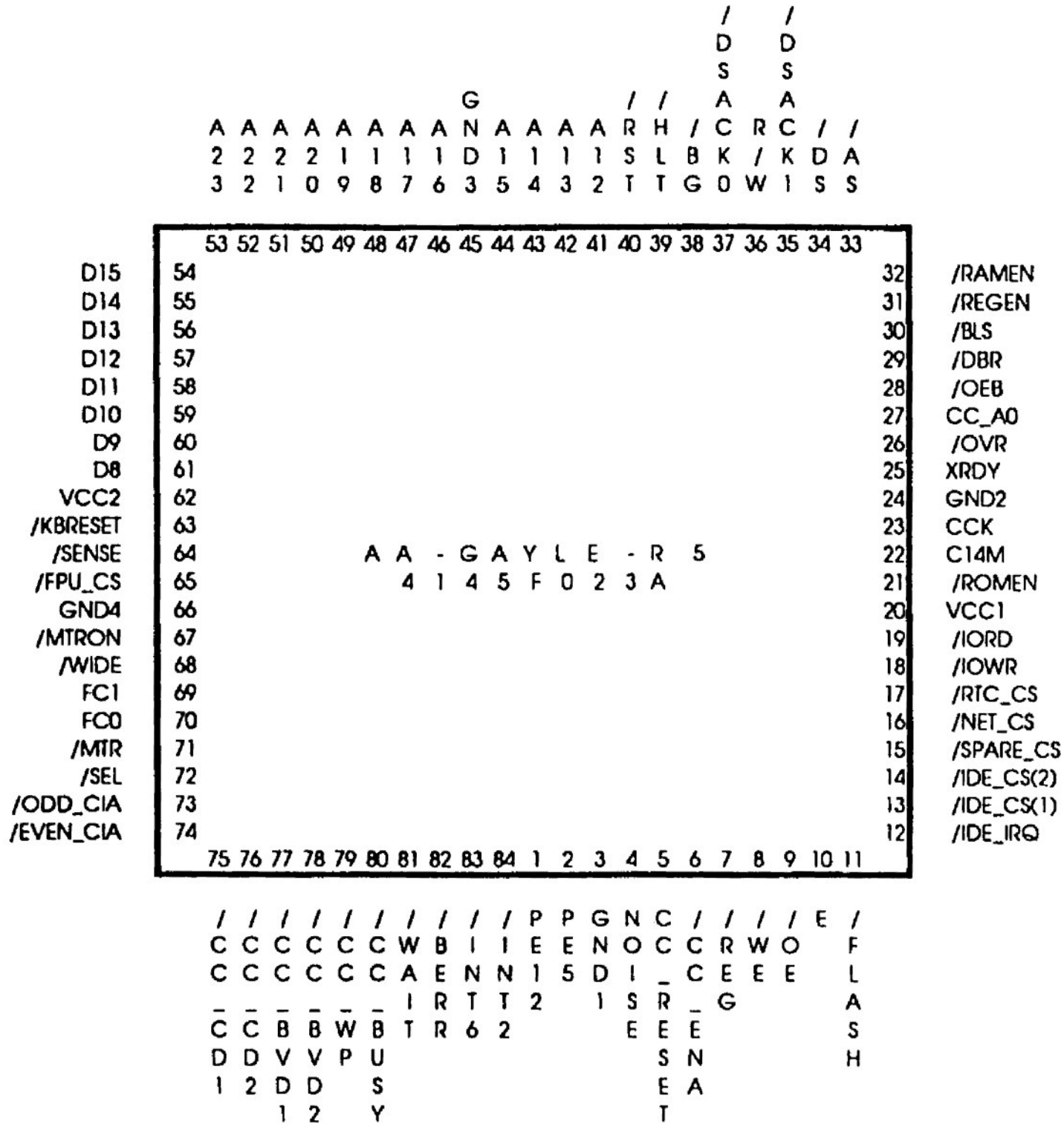

A23 A22 A21 A20 A19 A18 A17 A16 GND3 A15 A14 A13 A12 /RST /HLT /BG /DSACK0 R/W /DSACK1 /DS /AS
53 52 51 50 49 48 47 46 45 44 43 42 41 40 39 38 37 36 35 34 33
D15 54
D14 55
D13 56
D12 57
D11 58
D10 59
D9 60
D8 61
VCC2 62
/KBRESET 63
/SENSE 64
/FPU_CS 65
GND4 66
/MTRON 67
/WIDE 68
FC1 69
FC0 70
/MTR 71
/SEL 72
/ODD_CIA 73
/EVEN_CIA 74
32 /RAMEN
31 /REGEN
30 /BLS
29 /DBR
28 /OEB
27 CC_A0
26 /OVR
25 XRDY
24 GND2
23 CCK
22 C14M
21 /ROMEN
20 VCC1
19 /IORD
18 /IOWR
17 /RTC_CS
16 /NET_CS
15 /SPARE_CS
14 /IDE_CS(2)
13 /IDE_CS(1)
12 /IDE_IRQ
A A - G A Y L E - R 5
4 1 4 5 F 0 2 3 A
75 76 77 78 79 80 81 82 83 84 1 2 3 4 5 6 7 8 9 10 11
/CC_CD1 /CC_CD2 /CC_BVD1 /CC_BVD2 /CC_WP /CC_BUSY /WAIT /BERR /INT6 /INT2 PE12 PE5 GND1 NOISE CC_RESET /CC_ENA /REG /WE /OE E /FLASH

Alice

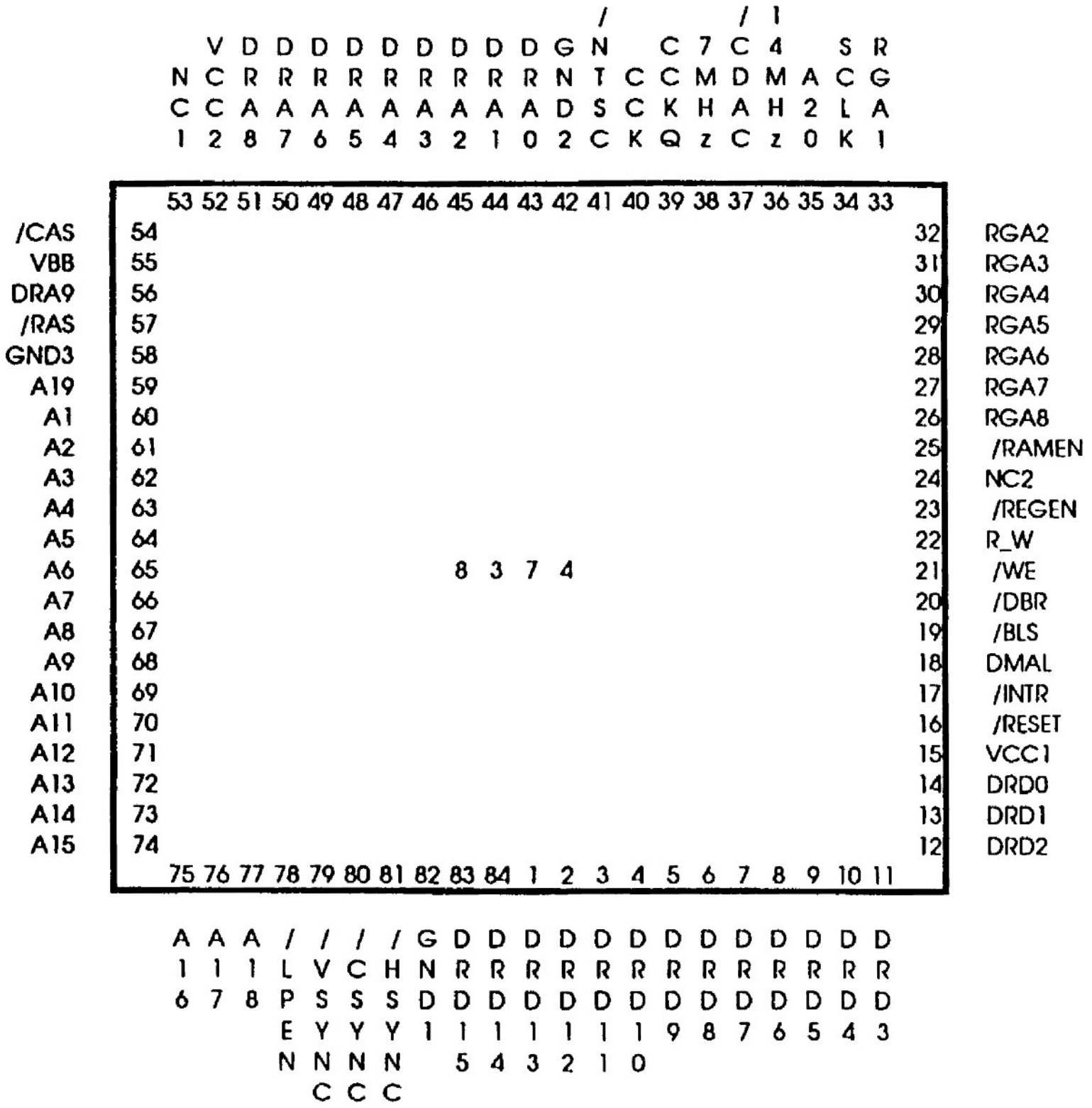
/CAS 54
VBB 55
DRA9 56
/RAS 57
GND3 58
A19 59
A1 60
A2 61
A3 62
A4 63
A5 64
A6 65
A7 66
A8 67
A9 68
A10 69
A11 70
A12 71
A13 72
A14 73
A15 74
32 RGA2
31 RGA3
30 RGA4
29 RGA5
28 RGA6
27 RGA7
26 RGA8
25 /RAMEN
24 NC2
23 /REGEN
22 R_W
21 /WE
20 /DBR
19 /BLS
18 DMAL
17 /INTR
16 /RESET
15 VCC1
14 DRD0
13 DRD1
12 DRD2
8 3 7 4

Lisa

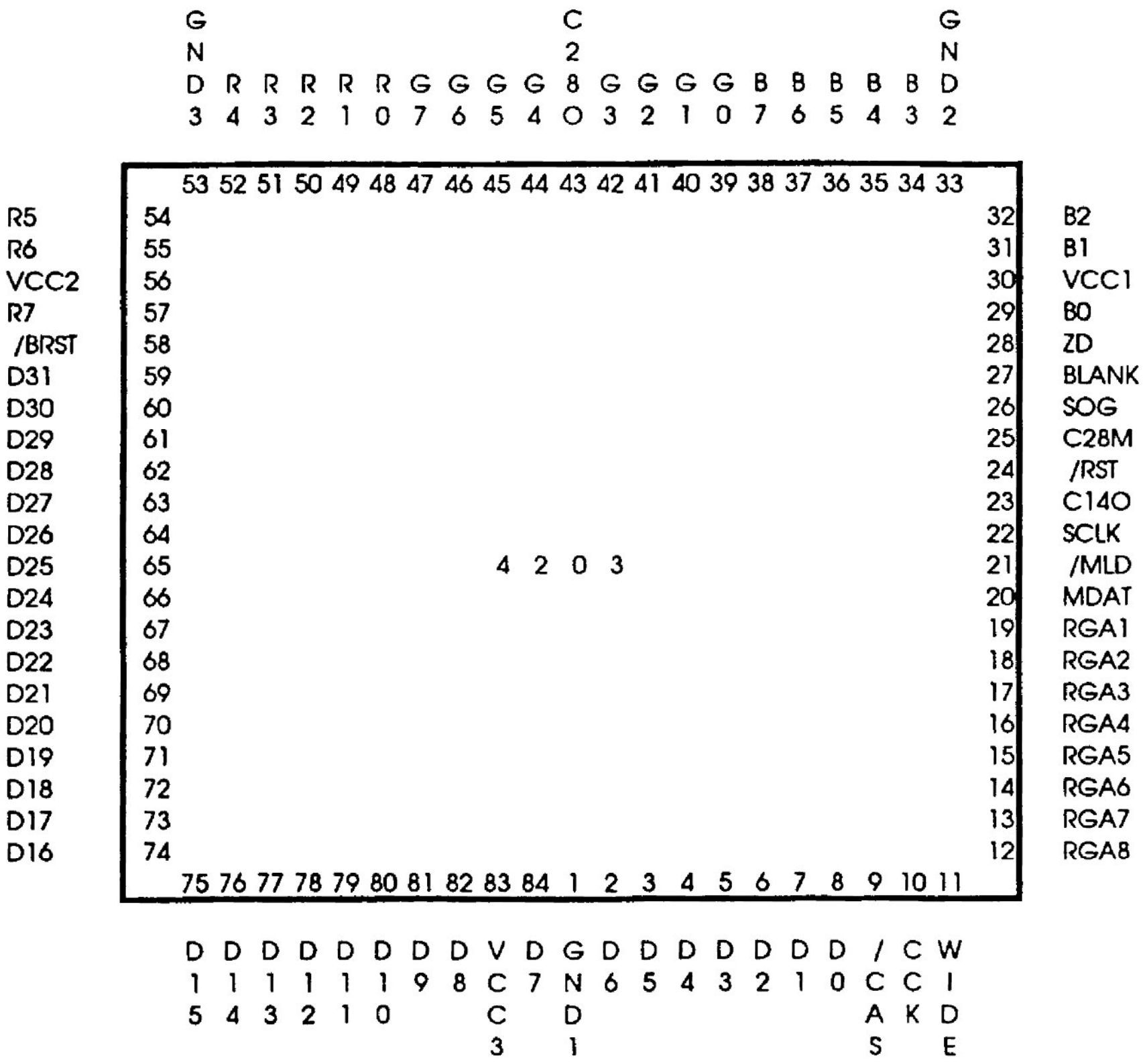
GND R4 R3 R2 R1 R0 G7 G6 G5 G4 C28O G3 G2 G1 G0 B7 B6 B5 B4 B3 GND
53 52 51 50 49 48 47 46 45 44 43 42 41 40 39 38 37 36 35 34 33
R5 54
R6 55
VCC2 56
R7 57
/BRST 58
D31 59
D30 60
D29 61
D28 62
D27 63
D26 64
D25 65
D24 66
D23 67
D22 68
D21 69
D20 70
D19 71
D18 72
D17 73
D16 74
32 B2
31 B1
30 VCC1
29 B0
28 ZD
27 BLANK
26 SOG
25 C28M
24 /RST
23 C14O
22 SCLK
21 /MLD
20 MDAT
19 RGA1
18 RGA2
17 RGA3
16 RGA4
15 RGA5
14 RGA6
13 RGA7
12 RGA8
4 2 0 3
75 76 77 78 79 80 81 82 83 84 1 2 3 4 5 6 7 8 9 10 11
D15 D14 D13 D12 D11 D10 D9 D8 VCC3 D7 GND1 D6 D5 D4 D3 D2 D1 D0 /CAS CCK WIDE