Gremlin®

SUPER SPACE ATTACK

ART NO.
420-0272

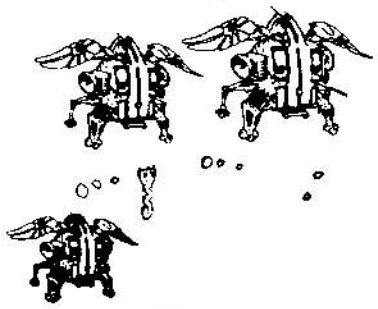

MANUFACTURED BY

Gremlin® Industries, inc.

OWNER'S MANUAL

SUPER SPACE ATTACK
OPERATING INSTRUCTIONS
AND
SERVICE MANUAL

SUPER SPACE ATTACK OWNER'S MANUAL

Copyright (C) 1979 by Gremlin Industries, Inc. All Rights Reserved All the information contained herein is the exclusive proprietary property of GREMLIN INDUSTRIES, and is disclosed in confidence and may not be duplicated nor copied in whole or part nor be used for any purposes than that for which disclosed.

TABLE OF CONTENTS

	PAGE
INTRODUCTION	1
IMPORTANT NOTE	2
REPACKAGING INSTRUCTIONS	3
GAME CONCEPT	4
OPTION SELECTION INSTRUCTIONS	6
MAINTENANCE PROCEDURES	7
TRANSFORMER VOLTAGE CONVERSION INSTRUCTIONS	Following Pages
SCHEMATICS	Following Pages

INTRODUCTION

This is an electronic game that makes extensive use of digital integrated circuitry and television monitor circuitry. This manual assumes the maintenance technician possesses a general knowledge of solid state circuitry, microprocessor, TTL digital integrated circuitry and T.V. monitor concepts. Any individual NOT knowledgeable in these areas SHOULD NOT attempt repair of the electronic portion of this game. IT SHOULD BE NOTED THAT ANY ATTEMPT TO REPAIR THE GAME IN THE FIELD WITHOUT EXPRESS CONSENT OF THE FACTORY WILL IMMEDIATELY VOID THE WARRANTY!!!

IMPORTANT NOTES:

NEVER	replace any components with anything other than exact replacement parts. (See Parts List located on Service Schematics.
NEVER	remove circuit boards/connections while power is on.
DO NOT	replace the fuse with anything other than the proper value. A blown fuse indicates an overload condition within the game. Replacing the fuse with a higher value can cause severe damage to internal components if an overload occurs.
ALWAYS	consult the manual before attempting repairs.

CORRESPONDENCE regarding this game should be addressed to:

GREMLIN INDUSTRIES, INC.

8401 Aero Drive

San Diego, California 92123

(714) 277-8700

IMPORTANT NOTE

An important service note is posted in this game and is repeated here for emphasis:

IF AT ANY TIME THE T. V. SCREEN SHOWS A MEANINGLESS DISPLAY

OR THE GAME OTHERWISE MALFUNCTIONS, SIMPLY DROP A COIN INTO

THE COIN MECHANISM. THIS SHOULD CORRECT THE PROBLEM. IF

NOT, THE GAME REQUIRES SERVICE.

The circuitry in this game has been arranged so that the insertion of a quarter through the coin mechanism will reset the system.
This clears up temporary problems caused by power line disturbances, static, etc.

SERVICE TECHNICIAN NOTE:

The system reset circuitry described above requires that the coin counter is attached to the system. If there is a coin counter problem and no replacement is available, the game will function properly if a 10K Ohm resistor is connected across the coin counter input pins to the video logic board.

REPACKAGING INSTRUCTIONS

Should it be necessary to ship this game, follow the instructions below for game recrating:

A) If the original shipping bolts have been discarded (Ref.1), obtain four 5/16-18x1 3/4" hex head bolts with 5/16" flat washers. Carefully lay the game on its side and attach skid (Ref.2).

B) Place game upright. Tape game keys to upper flange of operator's panel (Ref.3). Crate the game using appropriate shock-absorbent packing material (Ref.4). Include padding on all four corners of the game (Ref.5). After crating is completed, secure package with strapping (Ref.6).

NOTE: If the game is to be shipped to GREMLIN for service or repair, attach a tag identifying the distributor and indicate the service or repair to be made; include the full serial number of the game. GAME MUST BE SHIPPED PREPAID.

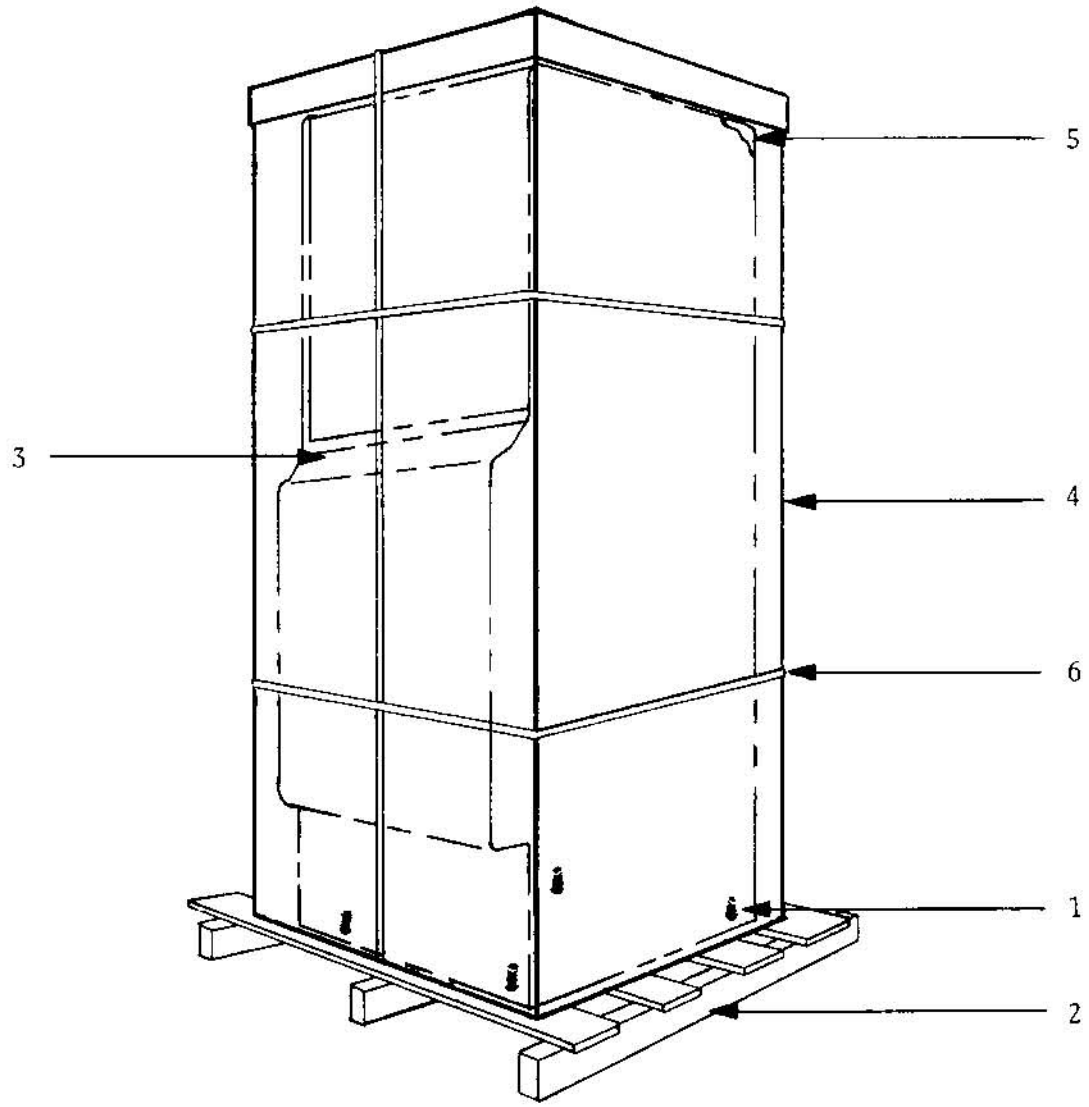

SUPER SPACE ATTACK- GAME CONCEPT

SUPER SPACE ATTACK is a one or two player game, in which players defend their laser bases from the attacking space creatures. When the game begins, five rows of creatures line up on the screen. The lowest row begins firing at the player's laser base which the player moves left or right across the screen. The player positions his base and fires at the creatures above, scoring 100 points for any creature hit in the lower two rows, 200 points for a hit in the third and fourth rows, and 300 points for a hit in the highest row. As more creatures are hit, the rest begin to move faster toward the bottom of the screen. Also, the creatures' missiles are released at a faster rate.

To prevent his base from being hit, the player can move it under the cover offerred by four force fields, just above the base. The first few laser bursts penetrate the force field, but do not pass through. Then, when a path is cut through the field, the laser fire can pass. Likewise, the creatures' projectiles destroy part of the force field, until a path is cut for them to pass. Toward the end of a game, the force fields are usually destroyed; the game then becomes even more challenging.

A small enemy UFO floats across the top of the screen during game play, to provide another target. When hit, the UFO explodes, scoring 1000, 1200, 1500, or 1800 points. This first UFO appears only during game play. A second one appears after each time the player clears the screen of creatures. This bonus UFO zig-zags from the top of the screen toward the bottom. If the player hits it, bonus points are awarded and the player gains an additional laser base.

When the player's laser base is destroyed the first time, a new one is added, and the action resumes. Each time all the creatures are destroyed and the screen resets, the five rows of creatures are arranged closer and closer to the player's base. The number of bases with which a player starts is operator adjustable. The game is shipped with the three laser base option selected; four, five, or six bases can be selected by internal jumpers. Also operator selectable is the number of points, 10,000 or 15,000, at which a free laser base is awarded. The game is shipped with the 10,000 point option enabled.

A final option is available to display, or not to display, on the screen the number of credits accepted. The maximum number of credits counted by the game is 99. This information is displayed in the bottom right corner of the screen. Instructions for selecting these options are included in this manual.

In the two player mode, the game action is the same as in the one player, except that the game allows players to take turns. The game then remembers where each player leaves off at the end of his turn. It also displays the three highest scores at the top of the screen for players to challenge.

SELECTING OPTIONS FOR SUPER SPACE ATTACK

The following describes the procedure for selecting any of the game options.

1. Locate the Molex pin connector labelled P3 on the logic board.
2. To select any of the options, simply connect one or both jumper wires, as necessary, to the pin connector. See the chart, below:

TO SELECT:	CONNECT JUMPER TO PIN #:
3 laser bases at game start	no jumper (game shipped this way)
4 laser bases at game start	2
5 laser bases at game start	3
6 laser bases at game start	4
Extra base awarded when second UFO hit	no jumper (game shipped this way)
No base awarded	1
Bonus (extra base) at 10,000 points	no jumper (game shipped this way)
Bonus at 15,000 points	6
Display number of credits	no jumper (game shipped this way)
Do not display credits	9
(Ground	10)

MAINTENANCE PROCEDURES- SPACE ATTACK

I. POWER SUPPLY (refer to drawing #815-0020, sheet 4)

1. Remove output connectors from power supply.
2. Make these initial tests: (GND to BLACK lead on C18, 9000 mfd capacitor)
   a) +9 V DC on POSITIVE terminal of C18
   b) +17-19 V on C6 (4700 mfd. cap.)
   c) -17-19 V on C5 (4700 mfd. cap.)
   d) -12 V at pin 11 (adjustable by trim pot R42)
   e) +12 V at pin 12 (adjustable by trim pot R8)
   f) +5 V at pins 18-20 (adjustable by trim pot R9)
   g) GND (ground, 0 V) at pins 14-16
   h) 2-3 V AC at pin 13 (Don't forget to change meter scale to AC)
3. Check these voltages again with the logic board connected. If any are wrong, a loading problem exists in the logic board, most likely. Possible causes of a short on the logic board could be: U73, C21, C25, or C26.

II. SOUND BOARD (refer to drawing #826-0002)

1. If no sounds are produced:
   a) check connections between logic board (labelled "Sound Out") and sound board and between the sound board and power supply.
   b) If these are good, check IC U16 on the logic board, pins 2,5,6,9,12, 15,16, and 19 for outputs when each sound is produced.
   c) If the outputs are present, check the output of the sound board, pin 22. If the signals are present here (use an oscilloscope for best results) check the amplifier circuit on the power supply, specifically, U4, Q8 and Q9.
2. If some sounds are produced, but not all:
   a) repeat steps a and b, above.
   b) If these prove OK, check the specific circuit for each sound:

SOUND TYPE	SOUND BOARD PIN #	CHECK THESE PARTS
Ship hit	Pin 2	U8, U9, U10
UFO hit	Pin 3	U17, U18, U19, Q9

Laser	Pin 4	U14, U4, U15, U16, Q5, U9, U10
UFO #1	Pin 6	U1,U2,U3,Q1,Q2
UFO #2	Pin 7	U11,U5,Q3,Q4,U6
Saucer	Pin 8	U24,U25,Q11,U20

III. LOGIC BOARD (refer to drawing #826-0004)

1. Game does not reset at power on: (see sheet 5)
   a) Check connector pin 3 on logic board for 3V AC signal. Also, check Q10, Q11, U55, U54, and U71.
2. No video: (see sheet 5)
   a) Check U48 (part #315-0042) for video signals. Also, check U41, Q6 and Q7 for the video signals.
3. Game does not coin on: (see sheet 5)
   a) Check coin switch connections to the logic board; make sure the coin switch is wired correctly.
   b) Check U12, pins 3 and 11 for a pulse each time the coin switch is activated. Also, check U11 and U13.
   c) Check also for the 4 msec. pulses at pin 7 of U10. These pulses serve as timing for the video circuit. Also, pin 5, U11; pin 6, U13.
   d) If a game is started only occasionally when a coin is deposited, the coin switch wire may need to be adjusted for a lighter, or heavier, tension.
   e) If the coin counter does not activate, check U12, pin 3 for a pulse each time a coin is inserted; also, check Q1 and Q2. (see sheet 5)
4. No Ø1 clock pulses to the microprocessor: (see sheet 4)
   a) check for pulses at the crystal, Y1.
   b) check for pulses at pin 6 of U68; at pin 6 of U49; and at pin 4 of U54.
5. No player control: (see sheet 5)
   a) Make sure the player control connections from the switches to the logic board are intact. Ensure that each switch is connected.
   b) If these are good, check for an output from U1 as you push each switch.
6. Random display on the screen:
   a) If the screen shows what appears to be a meaningless display, and

it cannot be cleared by activating the coin switch, several different parts of the circuit should be considered:

One or more RAM's, U56 through U63 (sheet 5)

One of the programmed IC's, or EPROM's (sheet 6) Check their sockets first.

The reset circuit is not working. (see #1, above)

The microprocessor is bad. (sheet 4)

Data or address bus problem (e.g. U33 or U34, sheet 4, could be bad.)

SPECIAL VOLTAGE CONVERSION INSTRUCTIONS

To operate this game on voltages of 100, 115, or 230 VAC, the following changes must be made in the power supplies of BOTH the game AND video monitor:

1. Game Power Supply

First determine which terminal configuration is used on your transformer. There are 3 different configurations, as shown below:

TO CONVERT TO 100 VAC refer to Figures 1, 2, & 3:

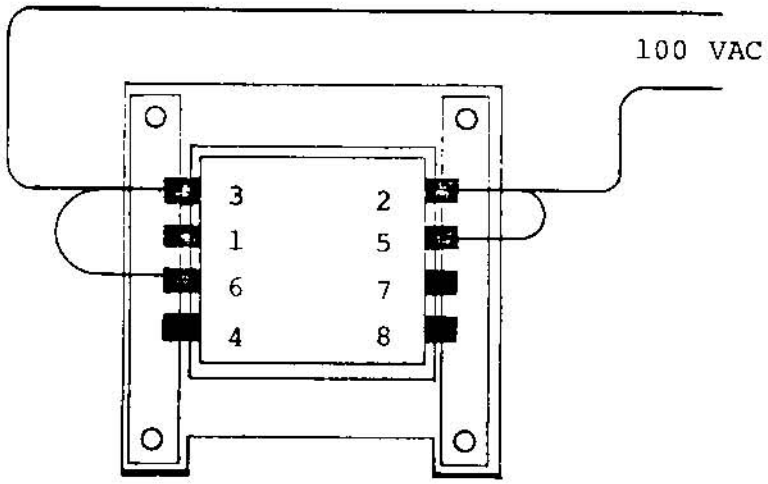

(Terminals 9, 10, & 11
located on far side)

Fig. 1

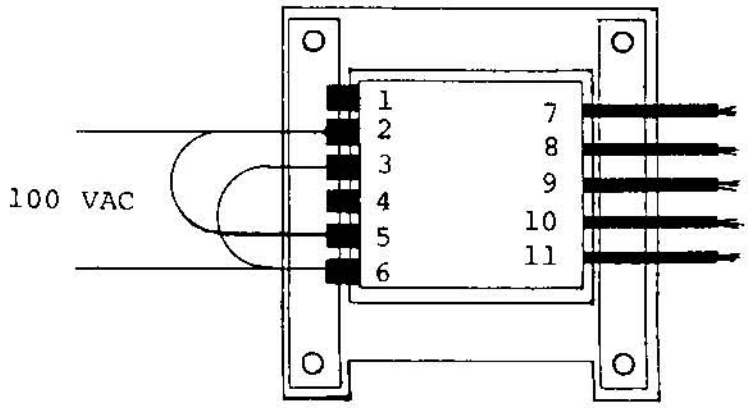

Fig. 2

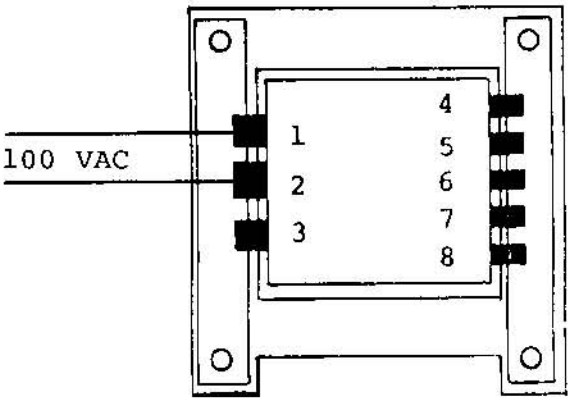

Fig. 3

TO CONVERT TO 115 VAC refer to Figures 4, 5, 6:

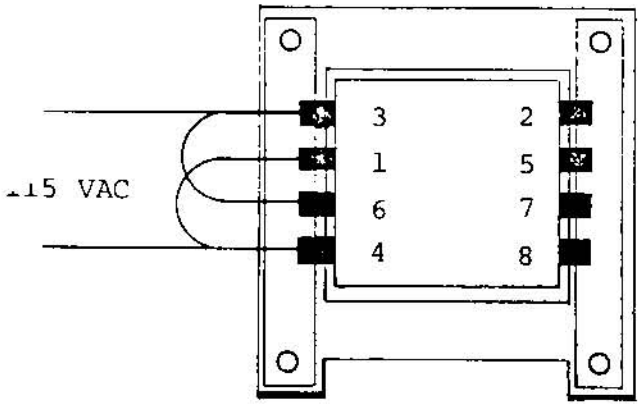

(Terminals 9, 10 &11
located on far side)

Fig. 4

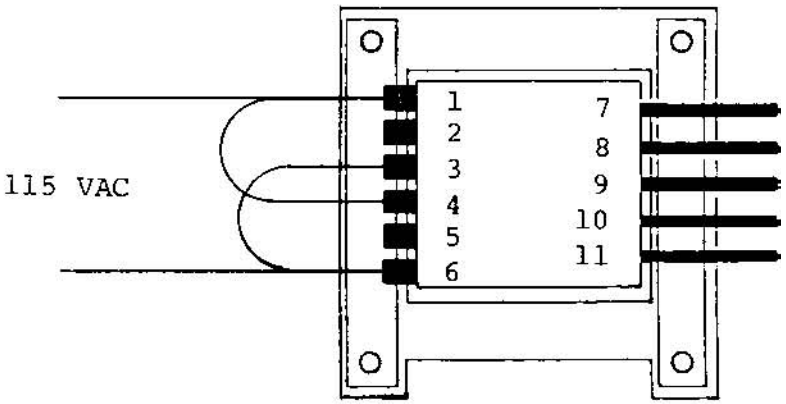

Fig. 5

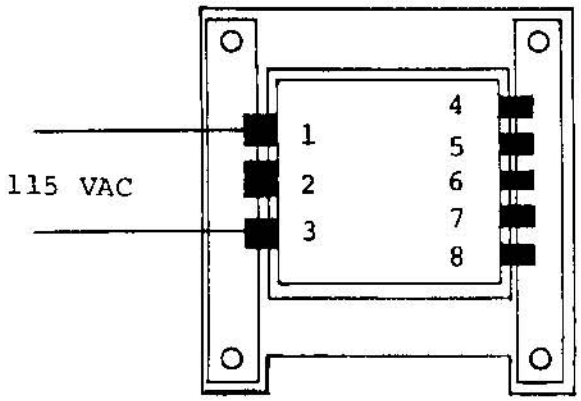

Fig. 6

TO CONVERT TO 230 VAC refer to Figures 7, 8, 9:

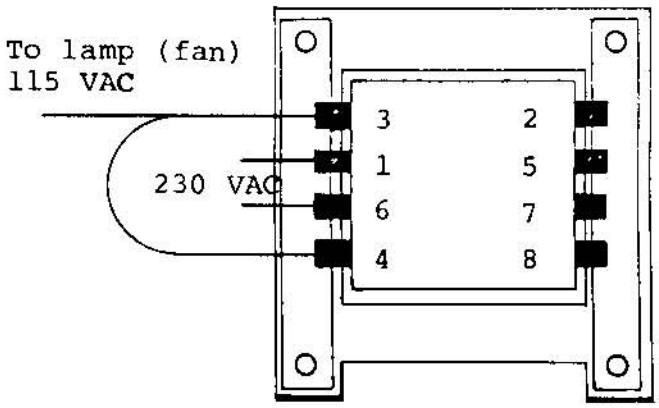

(Terminals 9, 10 & 11 located on far side)

Fig. 7

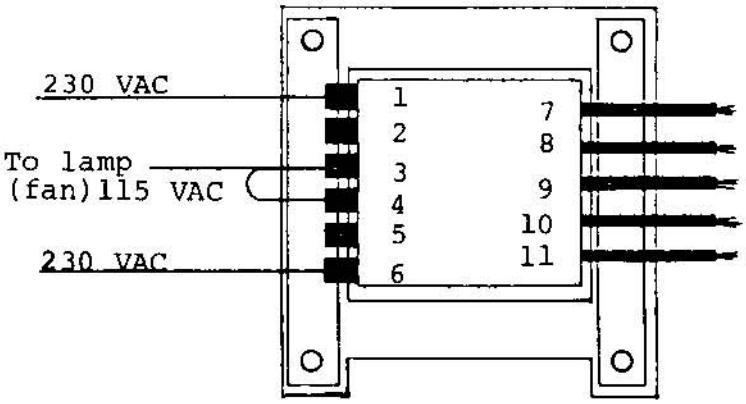

NOTE: Terminals 3 & 4 must be connected if there is no lamp or fan.

Fig. 8

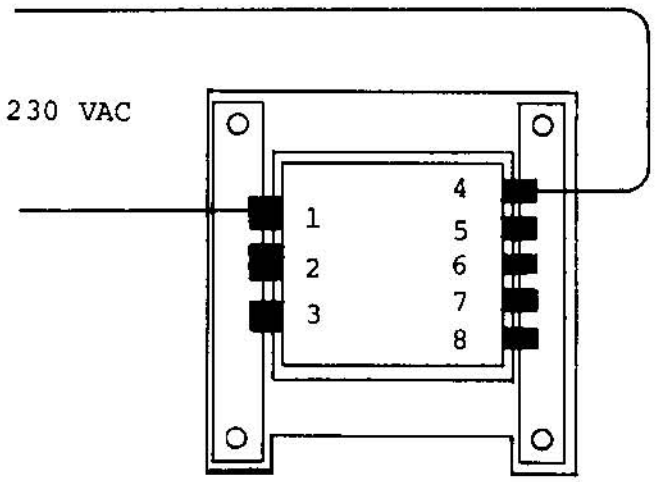

Fig. 9

2. Video Monitor Power Supply

In addition to the above changes, the transformer in the video monitor must also be converted to either 100, 115, or 230 VAC. This is done simply by removing the terminal cover in the back of the monitor chassis (located to the side of the power transformer, and labelled "VOLTAGE SELECTION TAPS"). Then, move the jumper wire to the proper voltage terminal.

Gremlin Industries, Inc. San Diego, California 92123	PARTS LIST	TITLE Y-2 SOUND BOARD	826-0002 DWG NO	SH 2 OF 6	F REV

ITEM NO	PART NO	QTY PER ASSY	DESCRIPTION	REF DES
1	151-0001	10	CAP CER .05 µf 50V	C3,13,15,21,28,34,41,
				43,45,52
2	151-0012	12	CAP CER .1 µf 50V	C2,14,20,27,33,38,
				39,40,44,51,56,50
3	152-0001	2	CAP FILM .1 µf 100V	C5,17
4	152-0002	1	CAP FILM .22 µf 100V	C4
5	152-0011	2	CAP FILM .15 µf 100V	C36,37
6	152-0007	2	CAP FILM .001 µf 250V	C30,31
7	152-0010	2	CAP FILM .022 µf 100V	C18,25
8	152-0012	1	CAP FILM .047 µf 200V	C42
9	152-0017	1	CAP FILM .33 µf 100V	C7
10	152-0018	1	CAP FILM .01 µf 250V	C55
11	152-0020	1	CAP FILM .47 µf 100V	C54
12	153-0002	4	CAP TANT 1 µf 25V	C6,26,32,49
13	153-0003	1	CAP TANT 2.2 µf 25V	C16
14	153-0004	1	CAP TANT 4.7 µf 25V	C9
15	153-0006	3	CAP TANT 33 µf 25V	C11,12,19
16	170-0110	1	P.C. BOARD	
17	212-0021	1	CONN MALE 10 PIN	
18	212-0031	1	CONN MALE 12 PIN	
19	313-0004	10	IC LM741 EN	U2,3,5-7,9,10,15,16,18

Franklin Industries, Inc. San Diego, California 92122	PARTS LIST	TITLE Y-2 SOUND BOARD	826-0002 DWG NO	SH 3 OF 6	F REV

ITEM NO	PART NO	QTY PER ASSY	DESCRIPTION	REF DES
20	314-0001	9	IC TIMER LM555	U1,8,11,14,17,19,20,24,25
21	315-0035	1	IC MM5837	U4
22	471-0102	10	RES 1K OHM 1/2W 5%	R3,5,9,12,16,30,43,49, 78,77
23	471-0103	15	RES 10K OHM 1/2W 5%	R6,8,13,15,21-25, 44-48,75
24	471-0104	2	RES 100K OHM 1/2W 5%	R20,80
25	471-0153	1	RES 15K OHM 1/2W 5%	R59
26	471-0154	3	RES 150K OHM 1/2W 5%	R2,42,82
27	471-0183	6	RES 18K OHM 1/2W 5%	R1,19,29,41,53,72
28	471-0223	4	RES 22K OHM 1/2W 5%	R27,52,60,83
29	471-0225	1	RES 2.2M OHM 1/2W 5%	R56
30	471-0272	1	RES 2.7K OHM 1/2W 5%	R62
31	471-0473	2	RES 47K OHM 1/2W 5%	R50,58
32	471-0682	1	RES 6.8K OHM 1/2W 5%	K17
33	471-0683	4	RES 68K OHM 1/2W 5%	R4,63,76,54
34				
35	471-0823	1	RES 82K OHM 1/2W 5%	R29
36	475-0008	5	POT CARBON 50K OHM	R10,26,51,61,81
37	481-0006	9	DIODE IN914/IN4148	D1-D9

FORM NO. 001-1501

Gremlin Industries, Inc. San Diego, California 92123	PARTS LIST	TITLE Y-Z SOUND BOARD	826-0002 DWG NO	SH 4 OF 6	F REV

ITEM NO	PART NO	QTY PER ASSY	DESCRIPTION	REF DES
38	482-0006	1	XISTOR 2N4403	Q9
39	482-0014	6	XISTOR 2N4401	Q1-4,6,11
40	482-0023	2	XISTOR 2N4093	Q5,8
41	471-0331	1	RES 330 OHM 1/2W 5%	R55
42	471-0332	2	RES 3.3K OHM 1/2W 5%	R64,84
43	471-0561	1	RES 560 OHM 1/2W 5%	R57
44	471-0563	4	RES 56K OHM 1/2W 5%	R7,11,14,18
45	471-0623	1	RES 62K OHM 1/2W 5%	R79
46	471-0105	3	RES 1M OHM 1/2W 5%	R73,R85,R86

FORM NO. -1501

Gremlin Industries, Inc. San Diego, California 92123	PARTS LIST	TITLE ASSY BASIC V.I.C.BD.	800-0031 DWG NO	SH 2 OF 5	A REV

ITEM NO	PART NO	QTY PER ASSY	DESCRIPTION	REF DES
1	151-0005	1	CAP CER 680 pf 50V	C39
2	151-0012	54	CAP CER .1 µf 50V	C3,5,7-11,13-17,22,25,
				C27-38, C40-67
3	152-0001	1	CAP FILM .1 µf 100V	C4
4	152-0017	1	CAP FILM .33µf 100V	C24
5	153-0001	6	CAP TANT 10 µf 25V	C12,20,21,23,26,68
6	153-0002	1	CAP TANT 1µf 25V	C19
7	170-0150	1	PCB C.V. LOGIC	
8	211-0004	6	CONN PIN TEST PT	TP1-TP4, GND
9	212-0004	2	CONN M 4 PIN	
10	212-0021	3	CONN M 10 PIN	
11	212-0031	1	CONN M 12 PIN	
12	213-0001	6	SKT 24 PIN DUAL INLN	XU22-XU27
13	213-0004	12	SKT 16 PIN DUAL INLN	XU33, XU34, XU56-XU63,
				XU65, XU66
14	213-0005	2	SKT 40 PIN DUAL INLN	XU48, XU53
15	213-0008	3	SKT 20 PIN DUAL INLN	XU1, XU16, XU19
16	230-0009	1	XTAL CLK 15.46848	Y1
17	313-0023	1	IC 320T-5.0	U73
18	314-0001	2	IC NE555	U10, U55

FORM 001-1501

Cromemco Industries, Inc. San Diego, California 92123	PARTS LIST	TITLE ASSY BASIC V.I.C.BD.	800-0031 DWG NO	SH 3 OF 5	A REV

ITEM NO	PART NO	QTY PER ASSY	DESCRIPTION	REF DES
19	314-0015	1	IC 7404	U54
20	314-0018	3	IC 74LS00	U4, U12, U32
21	314-0019	2	IC 74LS04	U35, U64
22	314-0040	3	IC 74LS125	U13, U46, U47
23	314-0046	1	IC 74S04	U68
24	314-0053	4	IC 74 S175	U49-U51, U67
25	314-0055	2	IC 74LS244	U1, U19
26	314-0058	5	IC 74LS08	U37-U39, U41, U71
27	314-0059	1	IC 74LS10	U52
28	314-0061	1	IC 74LS42	U40
29	314-0062	2	IC 74LS74	U11, U72
30	314-0078	1	IC 74LS02	U36
31	314-0092	2	IC 8216	U33, U34
32	315-0039	8	IC 4K RAM 12 V	U56-U63
33	315-0031	1	IC Z80 MK 3880	U53
34	315-0042	1	IC VID INTERFACE	U48
35	314-0093	1	IC 74LS 374	U16
36	316-0042	1	IC PROM 32X8 SEQ	U66
37	316-0043	1	IC PROM 32X8 CTL	U65
38	390-0003	1	LED RED	D4
39	471-0011	1	RES 10 OHM 1/2W 5%	R50
40	471-0102	7	RES 1K OHM 1/2 W 5%	R7-R11, R32, R37
41	471-0103	1	RES 10K OHM 1/2 W 5%	R6

Gremlin Industries, Inc. San Diego, California 92123	PARTS LIST	TITLE ASSY BASIC V.I.C.BD.	800-0031 DWG NO	SH 4 OF 5	A REV

ITEM NO	PART NO	QTY PER ASSY	DESCRIPTION	REF DES
42	471-0104	3	RES 100K OHM 1/2W 5%	R42 – R44
43	471-0222	6	RES 2.2K OHM 1/2W 5%	R20 – R25
44	471-0223	1	RES 22K OHM 1/2W 5%	R3
45	471-0331	6	RES 330 OHM 1/2W 5%	R30, R31, R33, R34, R45,
				R46
46	471-0471	1	RES 470 OHM 1/2W 5%	R49
47	471-0472	3	RES 4.7K OHM 1/2W 5%	R5, R47, R48
48	471-0750	1	RES 75 OHM 1/2W 5%	R41
49	475-0001	1	POT 10K PC MTV	R4
50	477-0002	2	RES PACK 15 X 2.2K	RP1, RP3
51	481-0006	3	DIODE IN914/IN4148	D1, D2, D5
52	482-0006	1	XSTR 2N4403	Q6
53	482-0010	1	XSTR PE8050	Q2
54	482-0014	4	XSTR 2N4401	Q1, Q7, Q10, Q11
55	530-0006	1	HEATSINK 295-1	

REVISIONS				
ZONE	LTR	DESCRIPTION	DATE	APPROVED
	A	RELEASED S.M.	3-15-79	

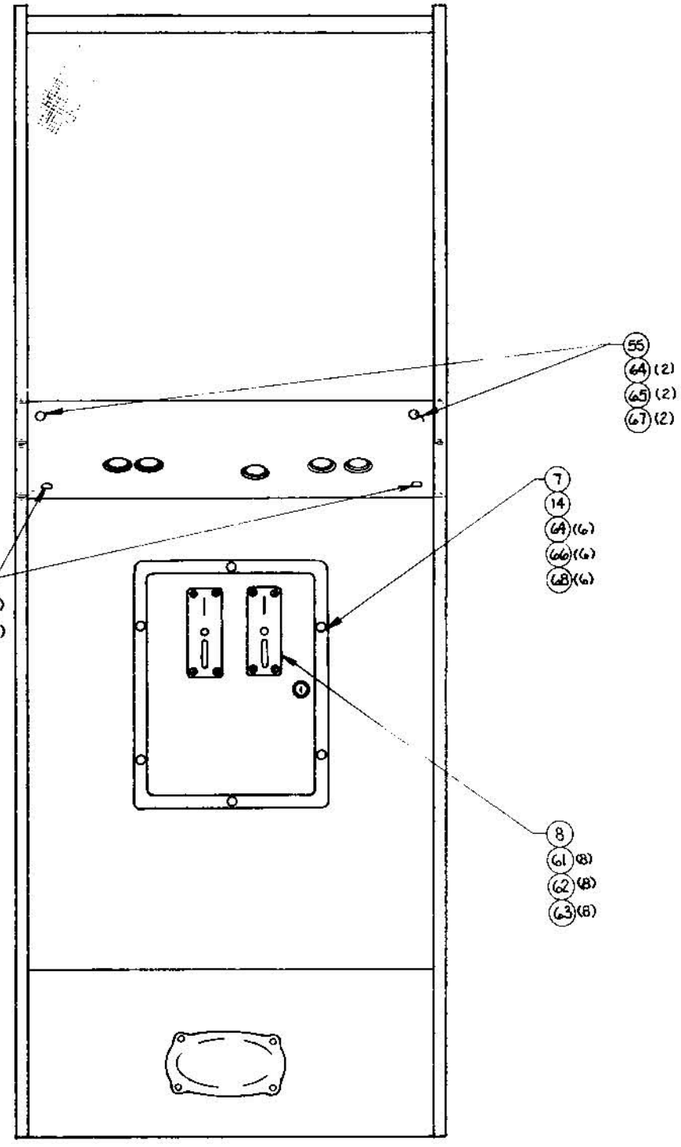

FRONT VIEW

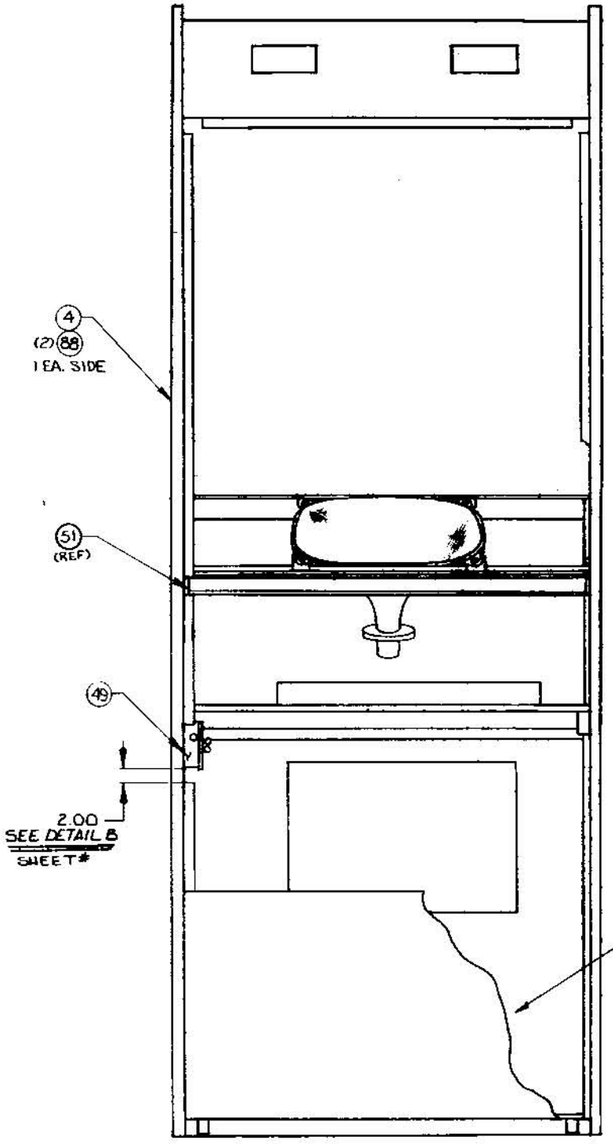

REAR VIEW DOOR REMOVED

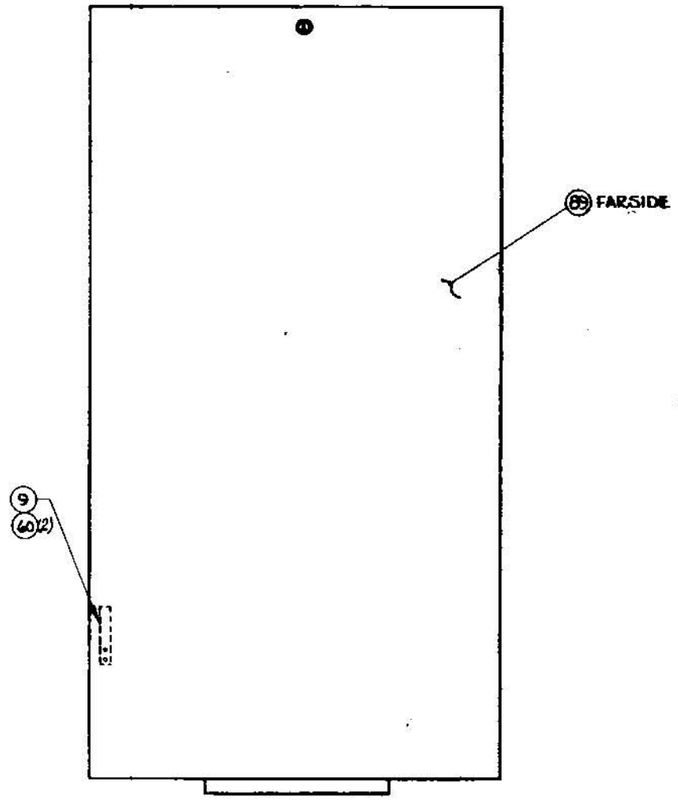

QTY REQD	CODE IDENT	PART OR IDENTIFYING NO.	NOMENCLATURE OR DESCRIPTION

PARTS LIST

UNLESS OTHERWISE SPECIFIED DIMENSIONS ARE IN INCHES
TOLERANCES ARE:
FRACTIONS ± DECIMALS .XX ± .XXX ± ANGLES ±

MATERIAL

FINISH

NEXT ASSY | USED ON

APPLICATION

DO NOT SCALE DRAWING

CONTRACT NO.

APPROVALS	DATE
DRAWN S. MAGNOLIA	3-6-79
CHECKED	3-15-79

Cronin Industries, Inc.
San Diego, California 92138

TOP ASSEMBLY
SUPER SPACE ATTACK

SIZE	CODE IDENT NO.	DRAWING NO.	
D		726-0001	A

SCALE NONE | SHEET 6 OF 10

726-0001 [A]

REVISIONS				
ZONE	LTR	DESCRIPTION	DATE	APPROVED
	A	RELEASED S.M.	3-15-79	

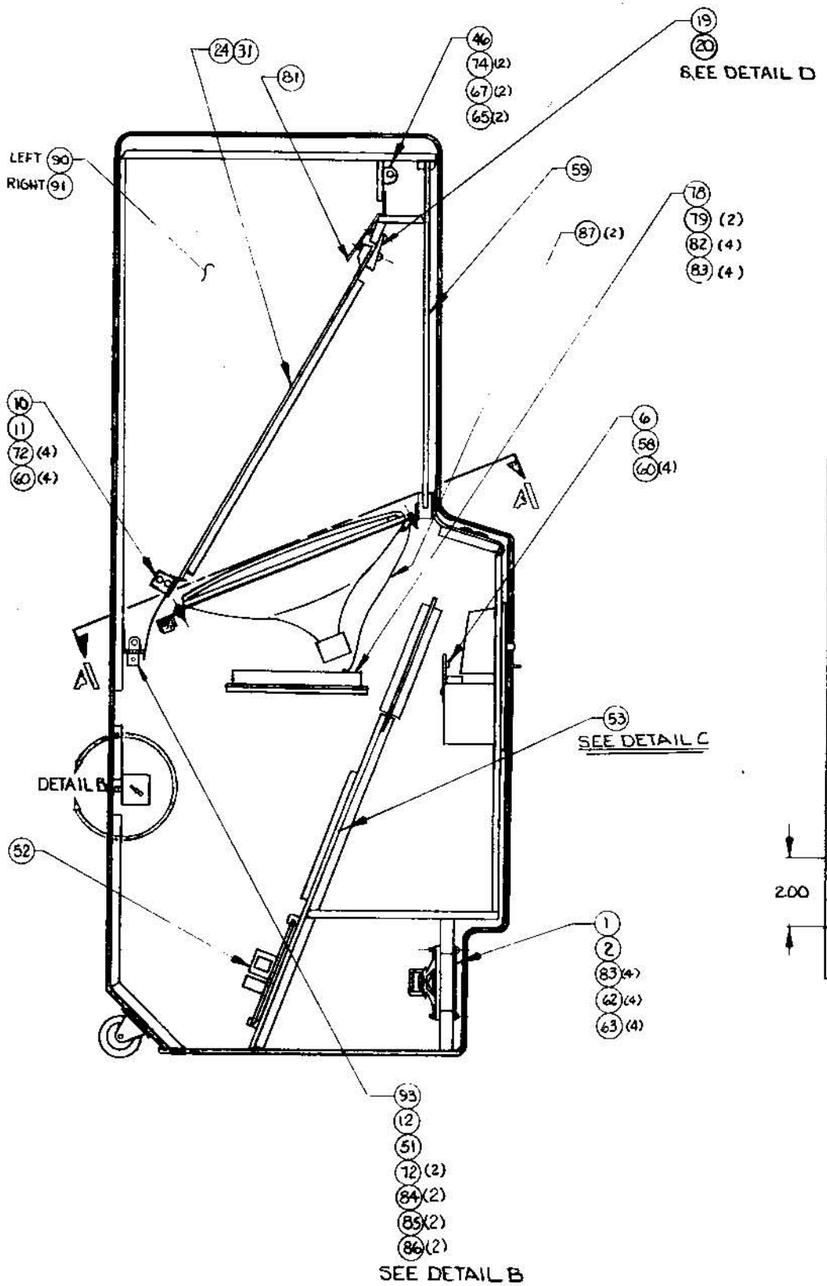

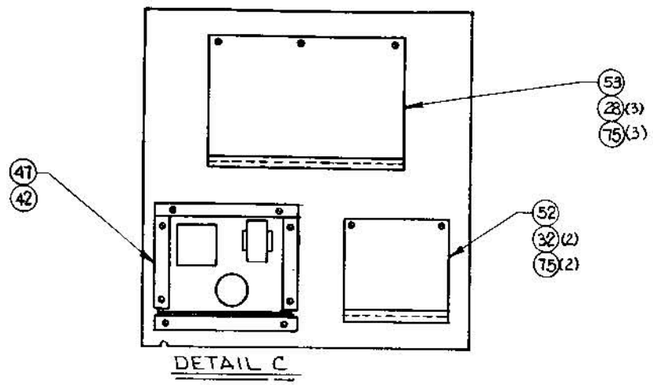

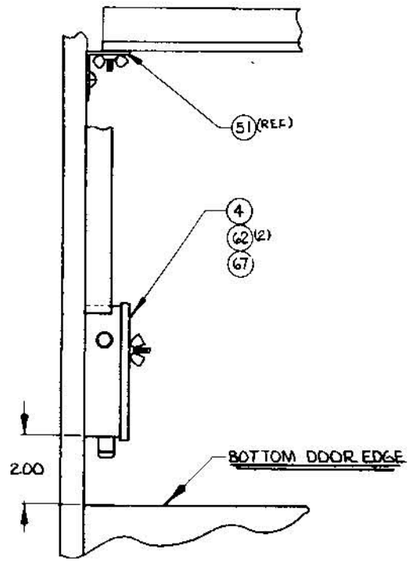

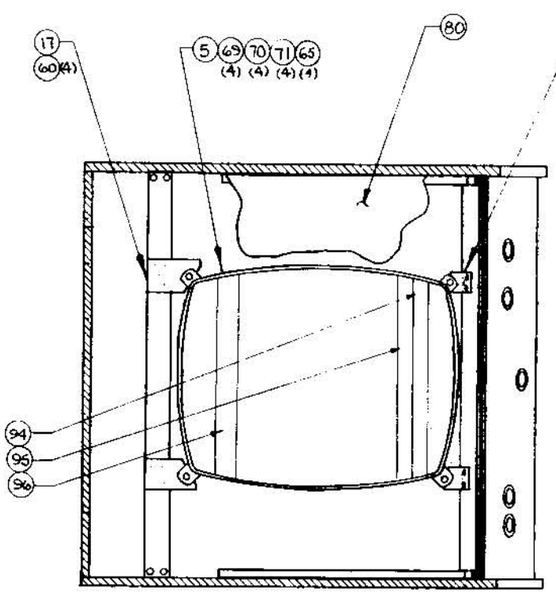

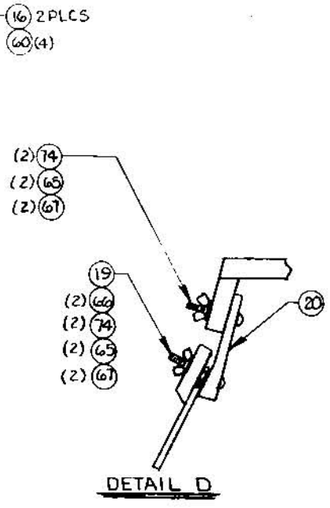

QTY REQD	CODE IDENT	PART OR IDENTIFYING NO.	NOMENCLATURE OR DESCRIPTION
			PARTS LIST

UNLESS OTHERWISE SPECIFIED DIMENSIONS ARE IN INCHES
TOLERANCES ARE:
FRACTIONS ± DECIMALS .XX ± .XXX ± ANGLES ±

MATERIAL

Finish

NEXT ASSY | USED ON

APPLICATION

DO NOT SCALE DRAWING

CONTRACT NO.

APPROVALS	DATE
DRAWN S. MAGNOLIA	3-5-79
CHECKED	3-15-79

Gremlin Industries, Inc.
San Diego, California 92123

TOP ASSEMBLY
SUPER SPACE ATTACK

SIZE	CODE IDENT NO.	DRAWING NO.	
D		726-0001	A

SCALE NONE | SHEET 7 OF 10

726-0001

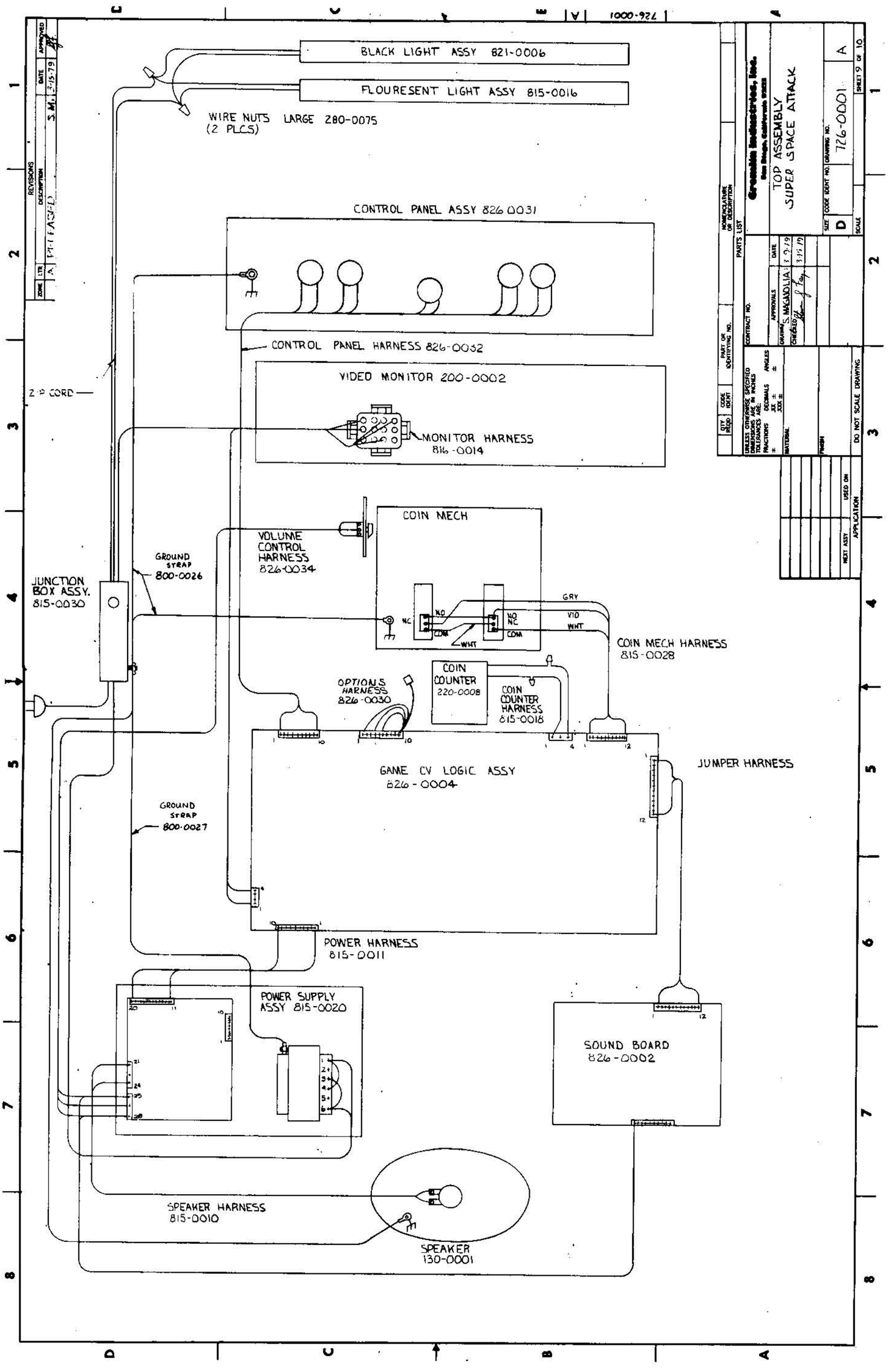
BLACK LIGHT ASSY 821-0006
FLOURESENT LIGHT ASSY 815-0016
WIRE NUTS LARGE 280-0075
(2 PLCS)
CONTROL PANEL ASSY 826-0031
CONTROL PANEL HARNESS 826-0032
VIDEO MONITOR 200-0002
MONITOR HARNESS
816-0014
2-19 CORD
COIN MECH
VOLUME CONTROL HARNESS 826-0034
GROUND STRAP 800-0026
JUNCTION BOX ASSY. 815-0030
GRY
VIO
WHT
COIN MECH HARNESS 815-0028
OPTIONS HARNESS 826-0030
COIN COUNTER 220-0008
COIN COUNTER HARNESS 815-0018
GAME CV LOGIC ASSY 826-0004
JUMPER HARNESS
GROUND STRAP 800-0027
POWER HARNESS 815-0011
POWER SUPPLY ASSY 815-0020
SOUND BOARD 826-0002
SPEAKER HARNESS 815-0010
SPEAKER 130-0001
Gremlin Industries, Inc.
TOP ASSEMBLY
SUPER SPACE ATTACK
726-0001
A
SHEET 9 OF 10
DO NOT SCALE DRAWING

REVISIONS				
ZONE	LTR	DESCRIPTION	DATE	APPROVED
	A	RELEASED S.M.	3-15-79	

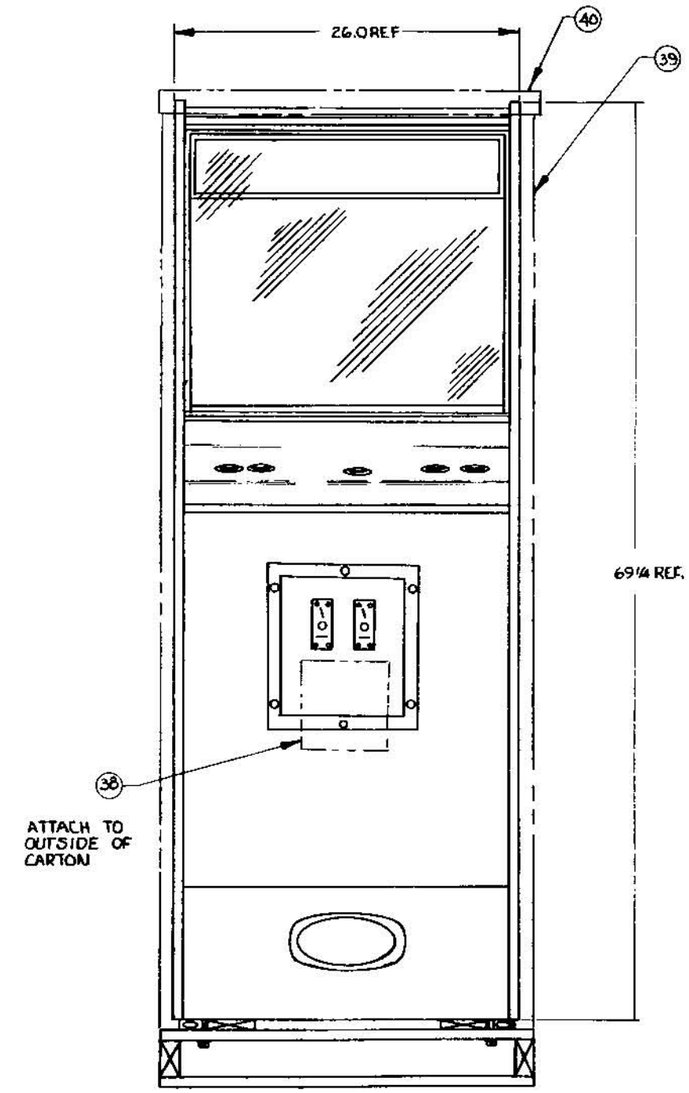

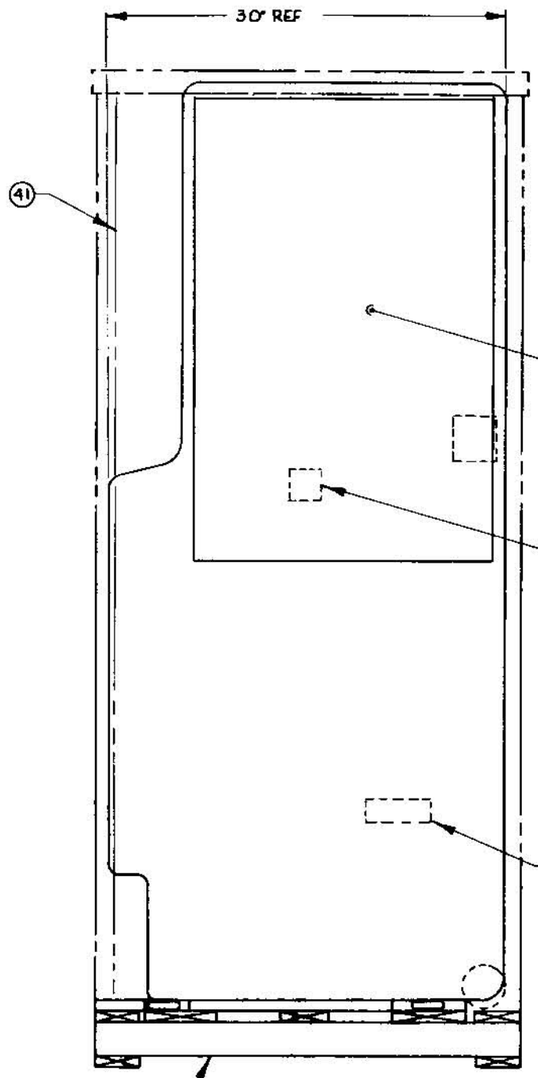

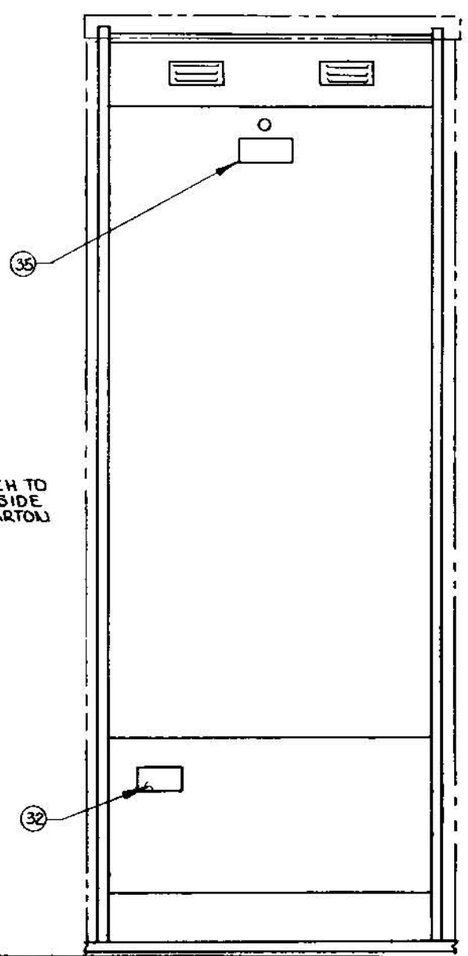

QTY REQD	CODE IDENT	PART OR IDENTIFYING NO.	NOMENCLATURE OR DESCRIPTION
			PARTS LIST

UNLESS OTHERWISE SPECIFIED DIMENSIONS ARE IN INCHES
TOLERANCES ARE:
FRACTIONS ± DECIMALS .XX ± .XXX ± ANGLES ±

MATERIAL

FINISH

DO NOT SCALE DRAWING

NEXT ASSY | USED ON
APPLICATION

CONTRACT NO.

APPROVALS	DATE
DRAWN S. MAGNOLIA	3-5-79
CHECKED	3-15-79

Gremlin Industries, Inc.
San Diego, California 92123

TOP ASSEMBLY
SUPER SPACE ATTACK

SIZE D | CODE IDENT NO. | DRAWING NO. 726-0001 | A

SCALE | SHEET 8 OF 10

726-0001 A

REVISIONS				
ZONE	LTR	DESCRIPTION	DATE	APPROVED
	A	RELEASED S.M.	2-19-79	

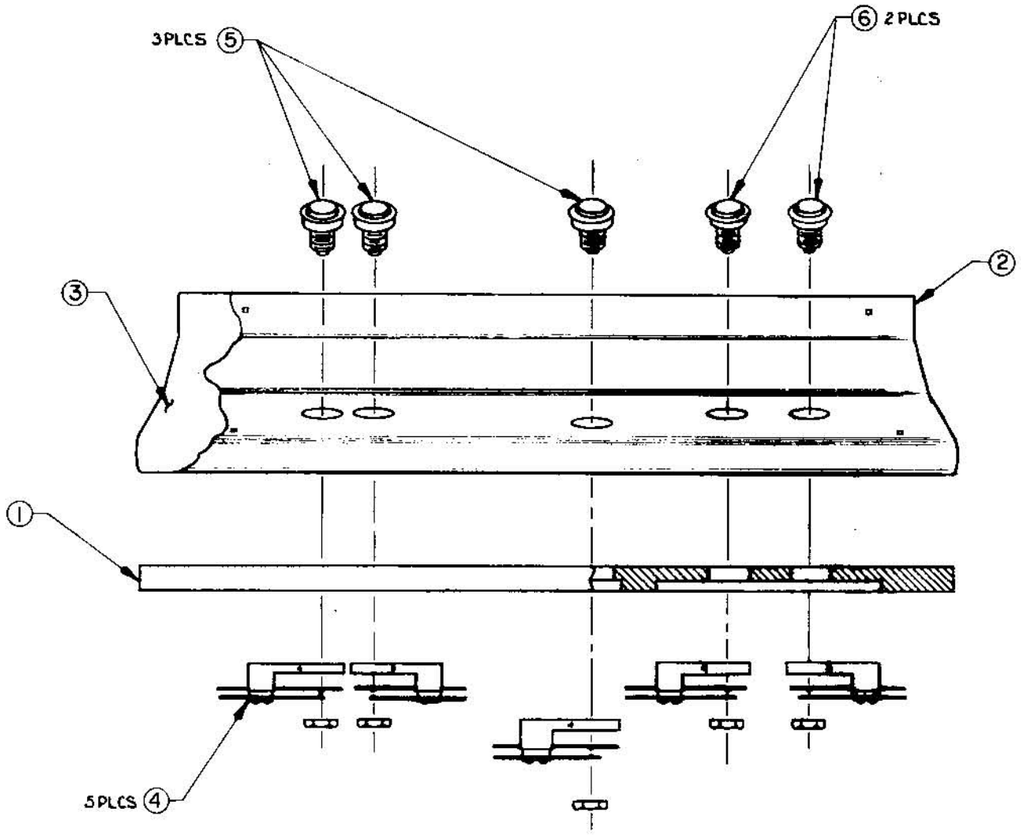

QTY REQD	CODE IDENT	PART OR IDENTIFYING NO.	NOMENCLATURE OR DESCRIPTION
			PARTS LIST

UNLESS OTHERWISE SPECIFIED DIMENSIONS ARE IN INCHES
TOLERANCES ARE:
FRACTIONS ± | DECIMALS XX ± .XXX ± | ANGLES ±

MATERIAL

FINISH

DO NOT SCALE DRAWING

NEXT ASSY | USED ON
APPLICATION

CONTRACT NO.

APPROVALS	DATE
DRAWN S. MAGNOLIA	2-15-79
CHECKED Steve J Fay	2-19-79

Gremlin Industries, Inc.
San Diego, California 92123

ASSEMBLY
CONTROL PANEL
(SPACE ATTACK)

SIZE	CODE IDENT NO.	DRAWING NO.	
D		826-0031	A

SCALE 1/2 | SHEET 3 OF 3

826-0031 A

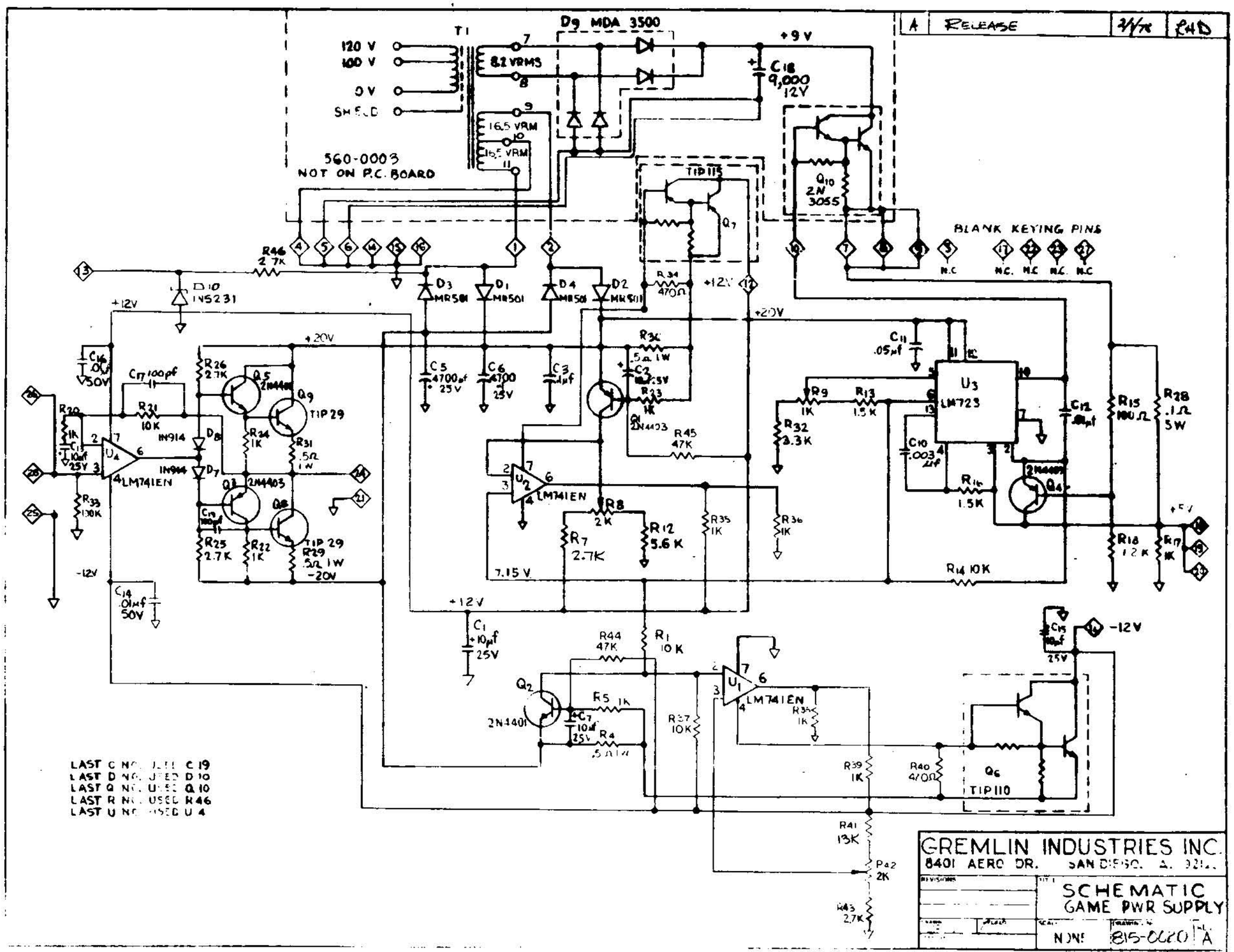

A RELEASE 2/1/78 RHD
D9 MDA 3500
T1
120 V
100 V
0 V
SHIELD
8.2 VRMS
16.5 VRM
16.5 VRM
560-0003
NOT ON P.C. BOARD
+9 V
C18 9,000 12V
Q10 2N 3055
TIP115
Q7
BLANK KEYING PINS
N.C.
R46 2.7K
D10 1N5231
D3 MR501
D1 MR501
D4 MR501
D2 MR501
R34 470Ω
+12V
+20V
C16 .01µf 50V
C17 100pf
R26 2.7K
Q5 2N4401
Q9 TIP29
R21 10K
R20 1K
C13 10µf 25V
U4 LM741EN
1N914
D8
D7
R24 1K
R31 .5Ω 1W
Q3 2N4403
Q8 TIP29
R33 100K
C19 100pf
R25 2.7K
R22 1K
R29 .5Ω 1W
-20V
-12V
C14 .01µf 50V
C5 4700µf 25V
C6 4700µf 25V
C3 .1µf
R30 .5Ω 1W
C2 10µf 25V
R23 1K
Q1 2N4403
R45 47K
U2 LM741EN
R8 2K
R7 2.7K
R12 5.6K
R35 1K
R36 1K
7.15 V
C1 10µf 25V
R44 47K
R1 10K
Q2 2N4401
R5 1K
C7 10µf 25V
R4 .5Ω 1W
R37 10K
U1 LM741EN
R38 1K
R39 1K
R40 470Ω
Q6 TIP110
R41 13K
P42 2K
R43 2.7K
C11 .05µf
U3 LM723
R9 1K
R13 1.5K
R32 3.3K
C10 .003µf
R16 1.5K
Q4 2N4403
C12 .01µf
R15 100Ω
R28 .1Ω 5W
R18 1.2K
R17 1K
R14 10K
+5V
C15 10µf 25V
-12V
LAST C NO. USED C19
LAST D NO. USED D10
LAST Q NO. USED Q10
LAST R NO. USED R46
LAST U NO. USED U4
GREMLIN INDUSTRIES INC.
8401 AERO DR. SAN DIEGO, CA. 92123
SCHEMATIC
GAME PWR SUPPLY
NONE
815-0020
A
SHEET 4

REVISIONS				
ZONE	LTR	DESCRIPTION	DATE	APPROVED

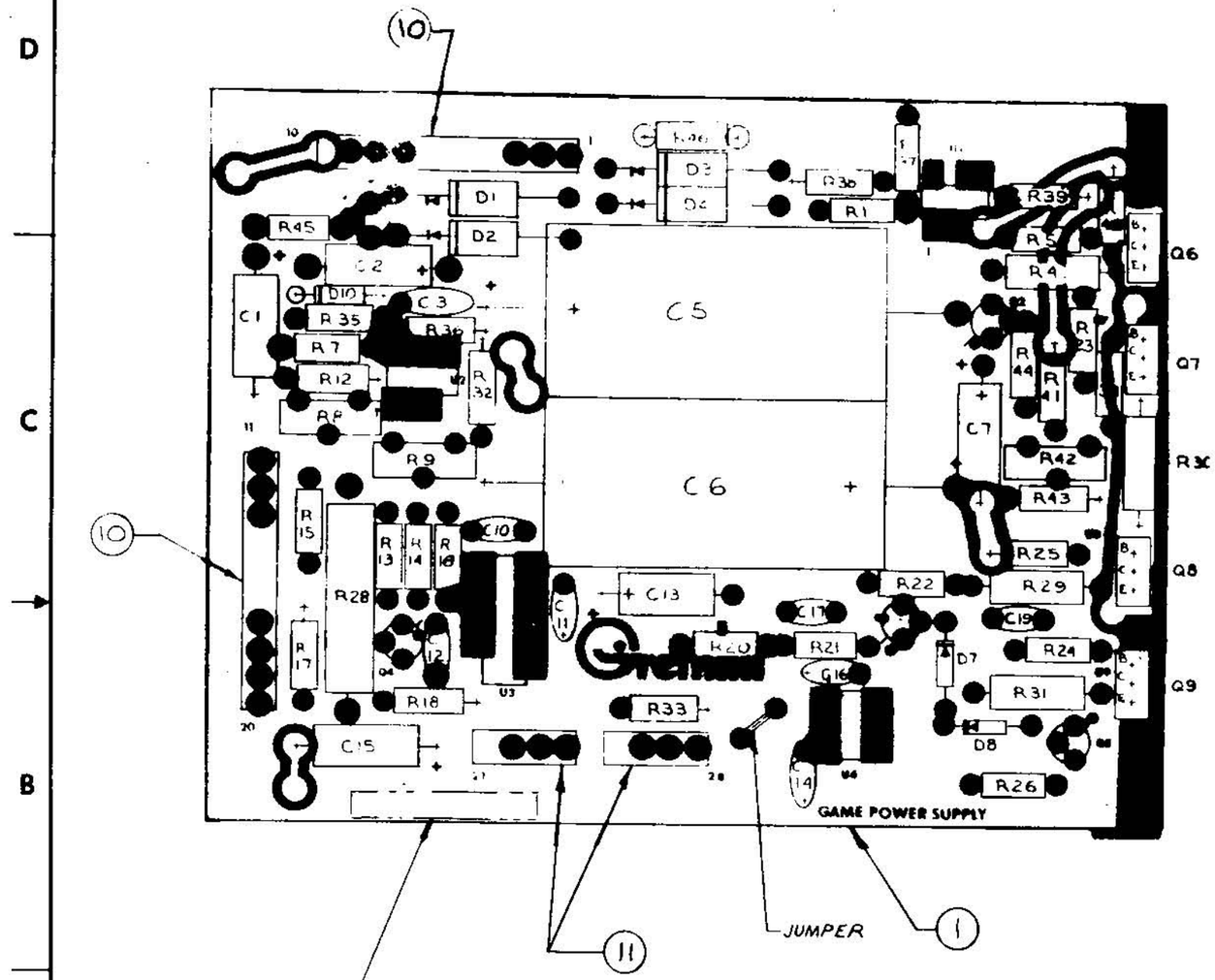

REIDENTIFY ASSY WITH No. 815-0021 & LATEST REV

QTY REQD	CODE IDENT	PART OR IDENTIFYING NO.	NOMENCLATURE OR DESCRIPTION
			PARTS LIST

UNLESS OTHERWISE SPECIFIED DIMENSIONS ARE IN INCHES
TOLERANCES ARE:
FRACTIONS ± DECIMALS .XX ± .XXX ± ANGLES ±

MATERIAL

FINISH

DO NOT SCALE DRAWING

CONTRACT NO.

APPROVALS	DATE
DRAWN K LeBlanc	3/4/78
CHECKED	3/4/78

Gremlin Industries, Inc.
San Diego, California

PC ASSY-
POWER SUPPLY

SIZE	CODE IDENT NO.	DRAWING NO.	REV
C		815-0021	A

SCALE | SHEET 4 OF

NEXT ASSY	USED ON
815-0020	Pwr Sply Assy

APPLICATION

REVISIONS				
ZONE	LTR	DESCRIPTION	DATE	APPROVED

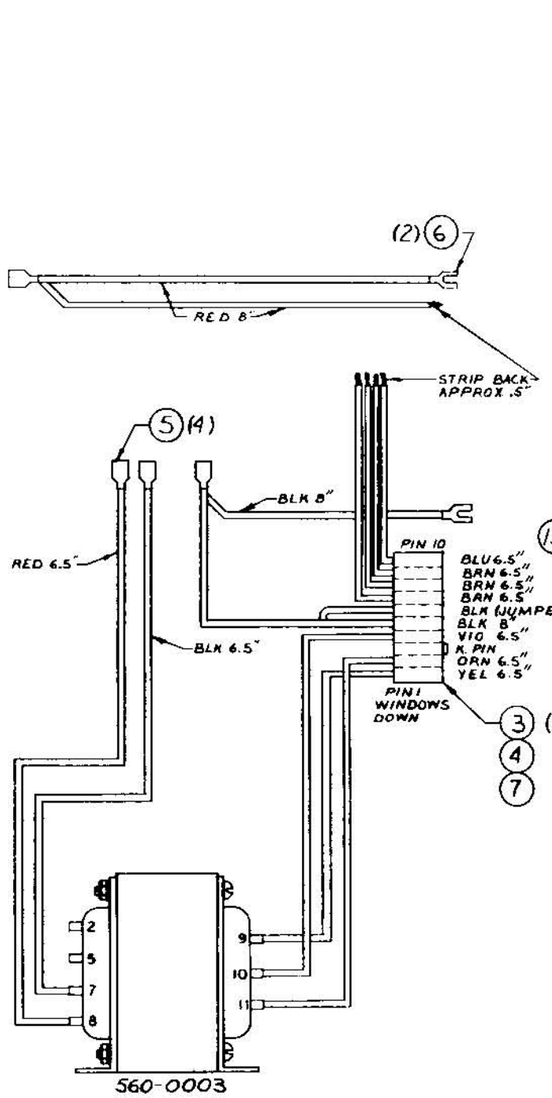

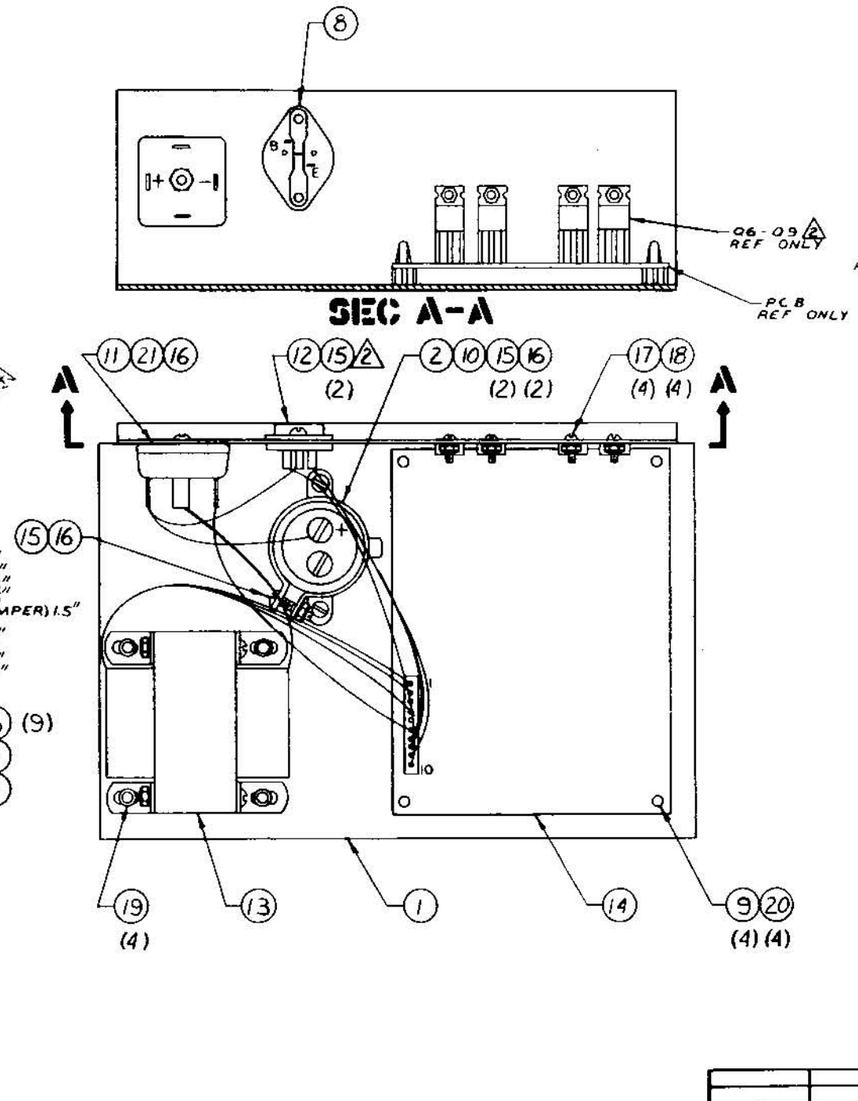

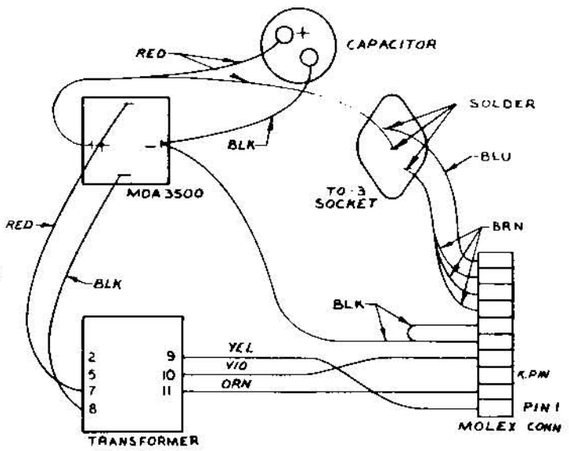

WIRING DIAGRAM

SEE DETACHED PARTS LIST 815-0020

QTY REQD	CODE IDENT	PART OR IDENTIFYING NO.	NOMENCLATURE OR DESCRIPTION

PARTS LIST

UNLESS OTHERWISE SPECIFIED DIMENSIONS ARE IN INCHES
TOLERANCES ARE:
FRACTIONS ± DECIMALS .XX ± .XXX ± ANGLES ±

MATERIAL

FINISH

DO NOT SCALE DRAWING

CONTRACT NO.

APPROVALS	DATE
DRAWN Lee J Lipsett	
CHECKED	

Franklin Industries, Inc.
San Diego, California 92123

ASSY
POWER SUPPLY

SIZE	CODE IDENT NO.	DRAWING NO.	REV
D		815-0020	A

SCALE FULL SHEET 3 OF 4

715-0001	SAFARI
NEXT ASSY	USED ON

APPLICATION

815-0020 A

△2 ALL POWER TRANSISTORS TO BE MOUNTED WITH HEAT SINKING PASTE & INSULATING HARDWARE

1. ALL WIRE TO BE AWG #22 GA

NOTES: UNLESS OTHERWISE SPECIFIED

ZONE	LTR	DESCRIPTION		DATE	APPROVED
	C	REVISED & REDRAWN PER ECN 266	WJB	1-8-79	[illegible]
	D	PER ECN 271	KB	1-15-79	[illegible]
	E	PER ECN 272	WJB	1-16-79	[illegible]
	F	PER ECN 276	KB	1-31-79	[illegible]

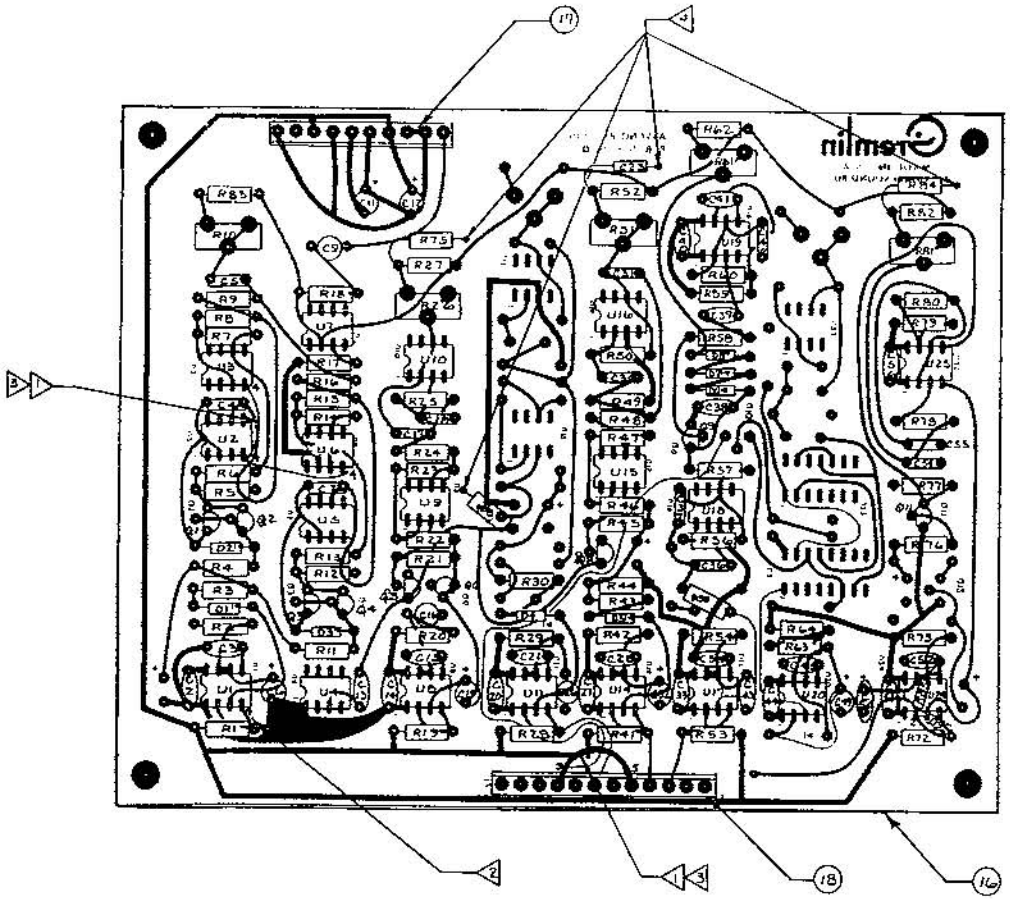

SEE DETACHED PARTS LIST

4 SOLDER TO GND PLANE

3 INSTALL ON BACK OF BOARD

2 CUT CLAD FROM U1, PIN 4 TO R1

1 JUMPER

NOTES:

NEXT ASSY	USED ON
726-0005	Y-2
726-0004	Y-2
726-0003	Y-2

APPLICATION

PARTS LIST

QTY REQD	CODE IDENT	PART OR IDENTIFYING NO.	NOMENCLATURE OR DESCRIPTION

UNLESS OTHERWISE SPECIFIED DIMENSIONS ARE IN INCHES TOLERANCES ARE: FRACTIONS ± DECIMALS .XX ± .XXX ± ANGLES ±

MATERIAL

FINISH

DO NOT SCALE DRAWING

CONTRACT NO.

APPROVALS	DATE
DRAWN [illegible]	1-8-79
CHECKED [illegible]	1-9-79

Gremlin Industries, Inc.
San Diego, California 92138

ASSEMBLY—
Y-2 SOUND BOARD

SIZE	CODE IDENT NO.	DRAWING NO.	REV
D		826-0002	F

SCALE 2/1 SHEET 5 OF 6

826-0002 F

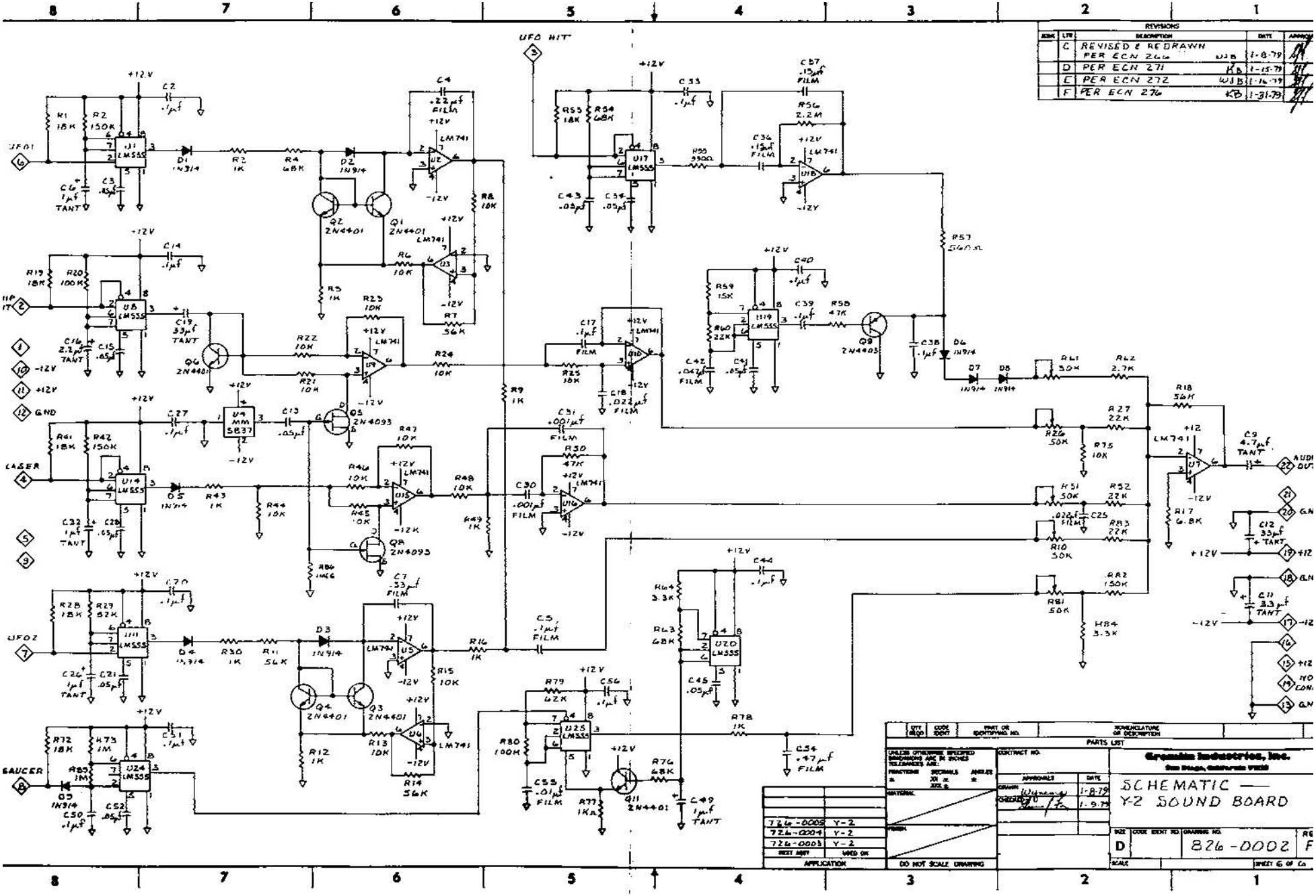
REVISIONS
C REVISED & REDRAWN PER ECN 266 WJB 1-8-79
D PER ECN 271 KB 1-15-79
E PER ECN 272 WJB 1-16-79
F PER ECN 276 KB 1-31-79
UFO HIT
LASER
UFO1
UFO2
SAUCER
AUDIO OUT
+12V
-12V
GND
LM741
LM555
2N4401
2N4093
IN914
Gremlin Industries, Inc.
SCHEMATIC — Y-2 SOUND BOARD
826-0002
PARTS LIST
726-0005 Y-2
726-0004 Y-2
726-0003 Y-2
DO NOT SCALE DRAWING

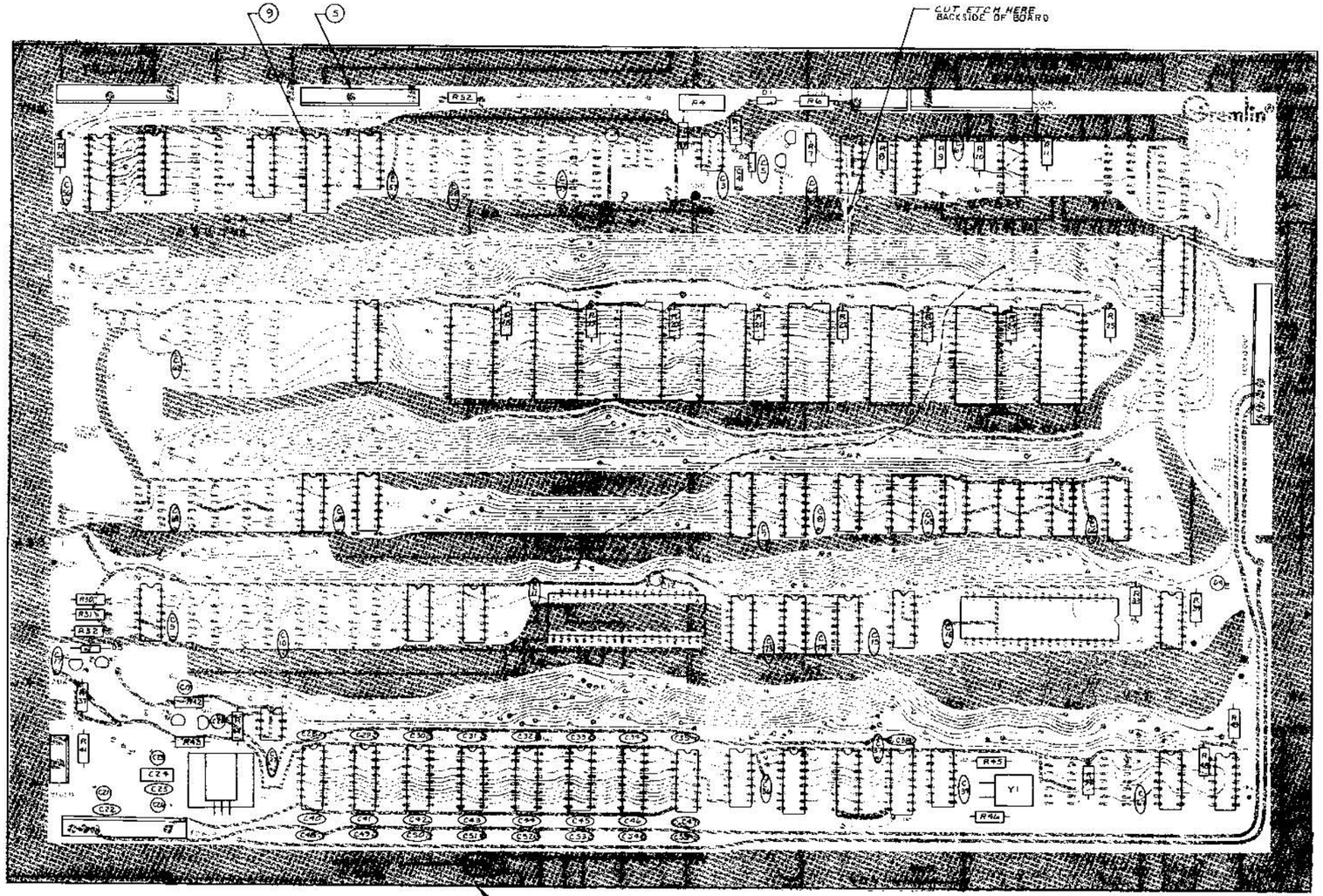
9
5
CUT ETCH HERE
BACKSIDE OF BOARD
Gremlin
R52
R50
R51
R32
R48
R49
R45
R5
Y1
R42
C22
C23
C24
C25
C26
C27
C28
C29
C30
C31
C32
C33
C34
C35
C36
C37
C38
C39
C40
C41
C42
C43
C44
C45
C46
C47
C48
C49
C50
C51
C52
C53
C54
C55
C56
C57
C58
C59
C60
C61

REVISIONS				
ZONE	LTR	DESCRIPTION	DATE	APPROVED
	A	RELEASED	1-19-79	

U66 316-0042 — U65 316-0043 — U67 74S175 — U51 74S175 — U50 74S175 — U49 74S175 — SRC BRL SHT 5 — M1 M2 M4 SHT 5 — WG VCAS SHT 5 — MSB VRAS SHT 5 SHT 5 TP4 — R33 330Ω — U54 7404 — M1 — U53 Z80 MK 3880 — R48 4.7K — VID — U72 74LS74 — MREQ — U71 74LS08 — WAIT — R47 4.7K — Vcc — INT — NMI — BUSRQ — BUSAK — HLT — RFSH — RESET

Y1 15.46848 MHZ — R45 330Ω — R46 330Ω — C39 680pf — U68 74S04 — U68 74S04 — U68 74S04

POWER — U73 LM320 T-5.0 — -12V — +12V — AC — GND — KEY — +5V — C25 .1μf — C26 10μf TANT — C21 10μf TANT — C22 .1μf — C24 .33μf FILM — C23 10μf TANT — R43 100K — Q10 2N4401 — Q11 2N4401 — R42 100K — R44 100K — U55 555 — C19 1μf TANT — C20 10μf TANT — C27 .1μf — D4 LED1 — R34 330Ω — U54 7404 — U54 7404 — U54 7404 — U71 74LS08 — R49 470Ω — COIN START SHT 5 — TP2 — TP3 — TP1 S.S.

A15 A14 A13 A12 A11 A10 — U71 74LS08 — MEMR — MEMW — WR — U52 74LS10 — VIDRD SHT 5 — VIDWR SHT 5 — U35 74LS04 — ROMRD SHT 6 — A13 A12 A11 A10 — U40 74LS42 — R8 R7 R6 R5 R4 R3 R2 R1 — SHT 6 — A10 SHT 5 & 6

A9 A8 A7 A6 A5 A4 A3 A2 A1 A0 — 74LS08 — SHT 5 & 6

D7 D6 D5 D4 — U33 8216 — SHT 5 & 6

D3 D2 D1 D0 — U34 8216 — SHT 5 & 6

RD — WR — MREQ — IORQ — U35 74LS04 — U36 74LS02 — MREQ — MEMR — OUTPUT SHT 5 — MEMW — INPUT SHT 5

826-0005 — NEXT ASSY — USED ON — APPLICATION

QTY REQD	CODE IDENT	PART OR IDENTIFYING NO.	NOMENCLATURE OR DESCRIPTION
		PARTS LIST	

UNLESS OTHERWISE SPECIFIED DIMENSIONS ARE IN INCHES TOLERANCES ARE: FRACTIONS ± DECIMALS .XX ± .XXX ± ANGLES ±

MATERIAL — FINISH — DO NOT SCALE DRAWING

CONTRACT NO.

APPROVALS	DATE
DRAWN	1-17-79
CHECKED	1-19-79

Cromemco Incorporated, San Diego, California 92123

SCHEMATIC — SPACE ATTACK C.V. LOGIC

SIZE	CODE IDENT NO.	DRAWING NO.	REV
D		826-0001	A

SCALE NONE — SHEET 4 OF 6

826-0004 A

REVISIONS				
ZONE	LTR	DESCRIPTION	DATE	APPROVED
	A	RELEASED	1-19-79	

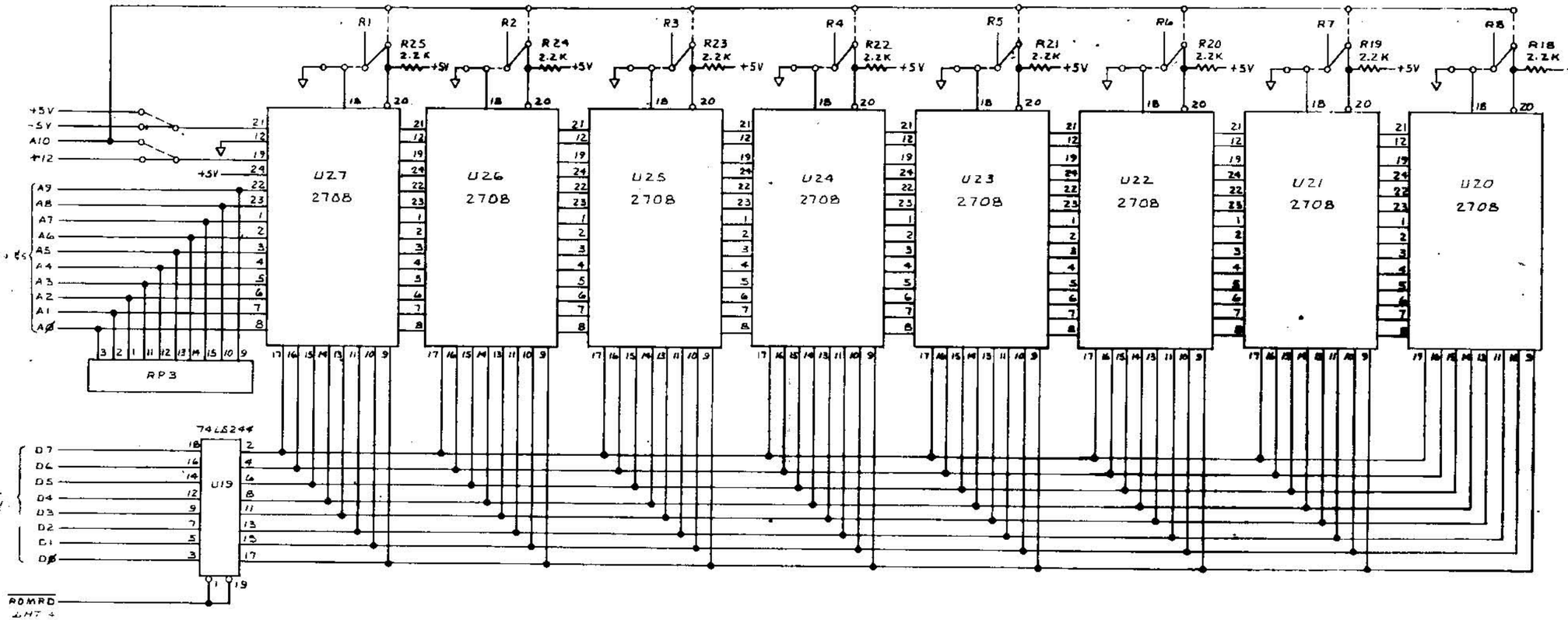

QTY REQD	CODE IDENT	PART OR IDENTIFYING NO.	NOMENCLATURE OR DESCRIPTION
			PARTS LIST

UNLESS OTHERWISE SPECIFIED DIMENSIONS ARE IN INCHES
TOLERANCES ARE:
FRACTIONS ± DECIMALS .XX ± .XXX ± ANGLES ±

MATERIAL

FINISH

DO NOT SCALE DRAWING

CONTRACT NO.

APPROVALS	DATE
DRAWN	1-17-79
CHECKED	1-19-79

Cromalin Industries, Inc.
San Diego, California 92121

SCHEMATIC —
SPACE ATTACK
C.V. LOGIC

SIZE	CODE IDENT NO.	DRAWING NO.	REV
D		826-0004	A

SCALE NONE SHEET 6 OF 6

826-0005
NEXT ASSY USED ON
APPLICATION

826-0004 A

REVISIONS				
ZONE	LTR	DESCRIPTION	DATE	APPROVED
	A	RELEASED	1-19-79	

U48 315-0042

U63 U62 U61 U60 U59 U58 U57 U56 315-0039

U64 74LS04

74LS125

74LS00

74LS374

74LS244

74LS08

74LS32

74LS10

74LS14

74LS74

74LS125

74LS00

74LS00

74LS00