BOXING BUGS

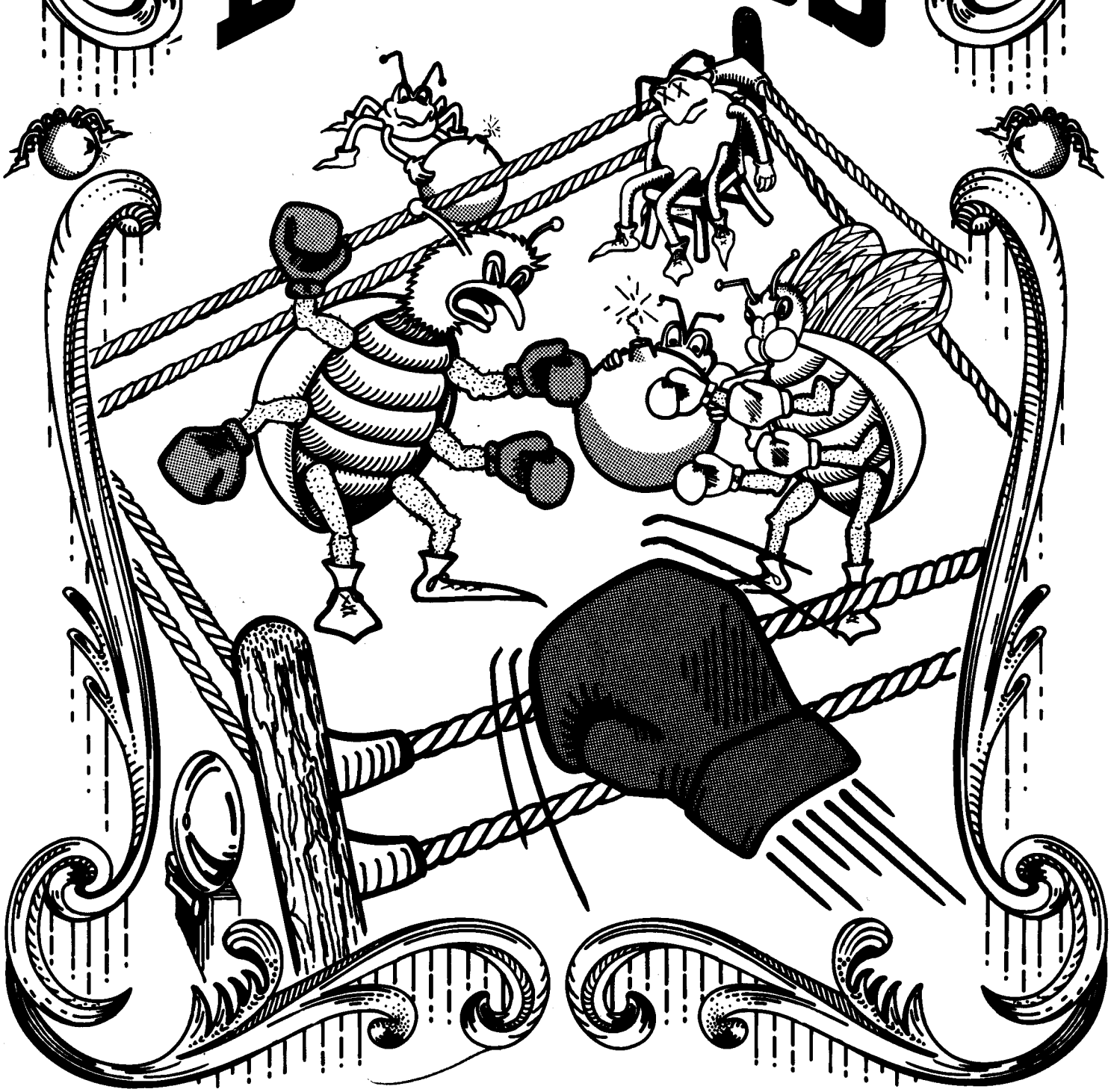

BOXING BUGS

GAME MANUAL

TABLE OF CONTENTS

	PAGE
FCC WARNING	i
PURPOSE AND LIMITATIONS	ii
WARRANTY	iii
CUSTOMER SERVICE PROCEDURES	iv
PART ONE	
BOXING BUGS - THE GAME	1-1
RECEIVING AND INSTALLING BOXING BUGS	2-1
OPTION SWITCHES DIAGRAM	2-3
GENERAL INFORMATION AND PERIODIC MAINTENANCE	3-1
OPERATOR'S GUIDE TO TROUBLESHOOTING	4-1
PART TWO	
VECTORY THEORY	5-1
THEORY OF OPERATION AND TROUBLESHOOTING HINTS	6-1
TROUBLESHOOTING GUIDE AND BENCH SET-UP	7-1
SUGGESTED PARTS FOR STOCK	8-1
BOXING BUGS PARTS LIST	9-1
APPENDIX A	
ASSEMBLY DRAWINGS, SCHEMATICS AND WIRING DIAGRAMS	

CINEMATRONICS, INC.

BOXING BUGS

WARNING:

This equipment generates, uses, and can radiate radio frequency energy; and, if not installed and used in accordance with the Instruction's Manual, may cause interference to radio communication. As temporarily permitted by regulation, it has not been tested for compliance pursuant to Subpart J of Part 15 of FCC rules, which is designed to provide reasonable protection against such interference. Operation of this equipment in a residential area is likely to cause interference in which case the user at his own expense will be required to take whatever measures may be required to correct the interference.

PURPOSE AND LIMITATIONS OF THIS MANUAL

This Manual has two major purposes, and is correspondingly separated into two major parts.

Part One of the Manual contains information operators need to know. It has been written to tell people who have little or no technical knowledge what they should know about this game, without getting technical.

Part Two of this Manual is designed to help the qualified technician understand the functions of the various circuits in the game. At press time, all available information was included in this Manual. If you need further assistance, please call Cinematronics' Customer Service Department at the toll-free number.

THIS MANUAL DOES NOT REPLACE TECHNICAL EXPERTISE. SHOULD OUT-OF-WARRANTY REPAIR BE NECESSARY, WE SUGGEST THE OPERATOR PROTECT HIS/HER INVESTMENT BY HIRING AN EXPERIENCED, COMPETENT TECHNICIAN (PREFERABLY WITH SOME KNOWLEDGE OF THE VECTORBEAM TM* MONITOR). WE HAVE SEEN MANY EXAMPLES COME INTO THE FACTORY OF INCOMPETENT REPAIR CREATING MANY MORE PROBLEMS THAN ORIGINALLY EXISTED. ONE COMMON FAULT IS INCORRECT SUBSTITUTION OF PARTS. ANOTHER IS DAMAGED FOIL TRACES ON PC BOARDS. REPAIRING BROKEN FOIL IS TIME CONSUMING AND THEREFORE COSTLY.

WARRANTY

Cinematronics, Inc. warrants the goods to be free from defects in material and workmanship under normal use and service for a period of ninety (90) days from the date of shipment from factory. Cinematronics makes no representation or warranties concerning the goods whether express or implied by operation of law or otherwise, including those of merchantability or fitness for any particular purpose, or with respect of patent infringement, except as may be specifically made herein. Cinematronics limits its warranty obligations herein to the repair or replacement of such parts which have been returned to Cinematronics' plant at purchaser's expense and which examination shall disclose Cinematronics' satisfaction to have been so defective and to the shipment of such repaired or replacement parts to the purchaser F.O.B. the shipping point.

This warranty does not apply to any Cinematronics' product which has been altered or repaired by unauthorized personnel or service facilities or any products which have had the unit serial number altered or removed.

Upon acceptance of the goods, the purchaser agrees to assume all liability for damages and/or bodily injury by the purchaser or any other person and to hold Cinematronics, Inc. harmless from liability or claims arising from the use of the goods by any person. Purchaser further agrees to indemnify Cinematronics, Inc. from any liability, claim, cause of action or litigation resulting from the use or misuse of the goods by any person.

Parts returned for warranty service must be packaged so that no damage is incurred during the shipment. Full documentation and instructions must accompany returned parts. Parts must be shipped prepaid to:

Cinematronics, Inc.
1841 Friendship Drive
El Cajon, CA 92020

CUSTOMER SERVICE PROCEDURES
FOR AUTHORIZED CINEMATRONICS' DISTRIBUTORS

It is the desire of Cinematronics, Inc. to provide efficient and courteous service should the need arise. We have a fully staffed Customer Service Department and encourage you to call our toll-free number: (800) 854-2666 for technical assistance between the hours of 8:00 A.M. and 5:00 P.M., California time, Monday through Friday.

In order to provide the very best service possible, the following procedure for ordering or returning parts must be followed:

1. All equipment ordered from Customer Service, whether in or out of Warranty, must be placed with a Distributor's purchase order, either by mail or verbally by telephone.

2. Advance replacement items may be obtained only during the term of the Warranty and when such items are available, using the same procedure as when ordering parts. When ordering a PCB, please include with your order the game serial number and the number of the PCB you wish replaced.

3. All items received as advance replacements will, after a period of thirty (30) days, become the property of the Distributor, with applicable charges applied in the event Customer Service has not received the defective item against which the advance replacement was made.

4. The Distributor must call this facility for an RMA number prior to returning any item. Please be prepared to provide us with the game serial number and the PCB number when requesting an RMA.

5. In all situations covered above, and in all other situations, the Warranty offered by Cinematronics, Inc. is applicable and should be fully understood.

6. Parts returned for service must be packaged so that no damage is incurred during the shipment. Cartons without a prominently displayed RMA number will not be accepted. Full

documentation including game serial number, PCB number on outside of package, and reason for return must accompany parts. Ship prepared to:

Cinematronics, Inc.
Customer Service Department
1841 Friendship Drive
El Cajon, CA 92020

(800) 854-2666 (714) 562-7000

PART ONE

Information for Operators

SECTION 1

BOXING BUGS

GAME LAYOUT

In the center of the screen is a player-controlled rotating cannon, enclosed within an octagon. The cannon shoots fireballs from one end and has a boxing glove on an extension arm on the other end. The octagon is a protective wall for the cannon. Fireballs and the boxing glove pass over the wall to targets outside.

Bombs are randomly located outside the wall. Each bomb has a lite fuse. Three bugs are also randomly scattered outside the wall. The player's score, the number of cannons remaining, and the number of bugs that must be knocked out to complete the round are shown at the top of the screen.

GAME PLAY

Play begins with the three bugs outside the protective wall trying to maneuver bombs against the protective wall. After a bomb has been positioned against the wall, the bug scurries to fetch another bomb.

The player uses the cannon to shoot the bombs and bugs with fireballs or punch the bugs with the glove. The cannon is aimed by rotating it to the proper position.

If a bomb is struck by a fireball, it begins sliding away from the point of impact. The direction it moves is determined by the angle of impact, just as in shooting pool. The player can control the motion of the bombs in this manner. The boxing glove will pass over all bombs.

When a bug is struck by a fireball, it slides away just like a bomb. Bugs hit by the boxing glove are instantly knocked out.

As play progresses, the fuses on the bombs burn down and the bombs begin to explode. If a bug is next to an exploding bomb, that bug is killed. If the bomb explodes while it is next to the protective wall, a segment of the wall is destroyed. If a bomb explodes next to the cannon, the cannon is destroyed.

Bombs that explode are instantly replaced by new bombs which appear randomly on the screen. Every time a bug is killed, a new bug will randomly appear from the edge of the screen as a replacement, unless the maximum number of bugs for that round has been reached.

After a pre-determined amount of time or one wall segment is destroyed, a flying bug moving at the same speed as the other bugs will appear. The flying bug moves randomly around the outside of the wall. This bug then stops and faces the cannon. The flying bug will either form a head or will lay an egg. If the head is formed, the head punches at the cannon. The head will destroy a wall segment if it strikes one and then recoils. After a brief moment, the head strikes out again and punches the cannon. This results in the destruction of the cannon. If no wall segment stops the initial punch of the flying bug, the cannon will be destroyed on the first punch. If an egg is laid, it hatches into either a red or lavender baby flying bug. The red bug immediately rushes at the cannon and will destroy either a wall segment or the cannon, depending upon which it encounters first. The lavender flying bug will randomly fly around the wall. As it does so, it swoops in and destroys a single wall segment at a time, until no wall segments are left. Fireballs have no effect on a flying bug. If a flying bug is punched with the boxing glove, the bug is knocked out and slowly drifts off the screen while stars whirl around its head. Flying bugs can be punched more than once for additional points.

A round ends when all of the bugs are destroyed. Each successive round becomes more difficult as the speed of the bugs increase and the burn time of the bomb fuses shorten. The game has six levels of difficulty.

If a player can fight through round three, a bonus round is awarded. During this round, two corner boxes in opposite corners appear. Each corner box has two doors which randomly open and close. During the bonus round, the cannon does not have a protective wall. The object of the bonus round is to maneuver bombs using the fireballs into the corner boxes. The corner boxes contain sleeping bugs which periodically wake up and scurry to the other corner box. The sleeping bugs killed by the bombs score bonus points. Fireballs and the boxing glove cannot penetrate the walls of the corner boxes. A player has thirty seconds to kill as many sleeping bugs as possible. After this bonus round, every fourth round is a bonus round.

Once a cannon is destroyed, play resumes at the point of destruction. The game ends when all the player's cannons are destroyed.

During a game, a player can panic three times. This is done by pressing the panic button. Once the panic button is pressed, all bombs and bugs on the screen are knocked away from the cannon. If a flying bug is on the screen, it is immediately frozen in its position for a few moments. Because there is only a limited number of times a player can panic and no more are awarded during a game, these must be used with discretion.

SCORING AND BONUSES

Each bug knocked out with the glove scores 200 points; each flying bug scores 400 points per punch. Bugs or bombs struck by fireballs score 20 points. Bugs blown up by bombs do not score any points. In addition to the above, during a bonus round, sleeping bugs that are blown up score 3000 points each.

GAME FEATURES

1. Two and only two bonus cannons can be earned during the game. These are awarded at 50,000 points and 100,000 points, operator adjustable to 30,000 and 80,000.

2. The number of cannons per player, operator adjustable to three or five.

3. A high score list with player initials is featured.

4. Players can achieve different boxing weight classes based upon points scored. (Sparring partner, bantam weight, feather weight, light weight, welter weight, middle weight, and heavy weight.)

5. A complete diagnostic, including total play time, number of games played, number of bonus cannons awarded, and number of bonus rounds achieved. The diagnostic can be easily accessed by a switch located inside the coin door.

6. There are five different types of bugs that are featured.

7. The game uses a Wells-Gardner color X-Y monitor.

8. There are six levels of difficulty and an unlimited number of rounds.

9. Status messages between rounds lets players know how many bugs must be fought to complete a round, how many more times the panic button can be used, and when a new weight class has been achieved.

10. At the end of each bonus round, the number of sleeping bugs killed and bonus points awarded is displayed.

11. Operator adjustable coinage values.

12. A rapid fire for the fireballs is activated by holding down the fire button.

SECTION 2
RECEIVING AND INSTALLING
BOXING BUGS

RECEIVING INSPECTION

Your game was shipped in ready-to-play condition. However, after removal of the shipping carton, a brief visual examination is suggested.

Naturally, you will want to make note of any physical damage to the game cabinet and its external components for freight claim purposes. Considering the quality of the shipping carton, any damage to the exterior would indicate possible interior damage as well.

The interior of the game should also undergo a brief examination for: loose mounting hardware (check to be sure that the major components are still securely mounted); disconnected or loose wires, cables or harnesses; electronic devices loose in their sockets; etc.

At this time the game serial number should be logged. Remember that the game serial number will be required if you need service from your distributor. Please complete the postage-free reply card and mail immediately.

ELECTRICAL REQUIREMENTS

Unless specified otherwise, your game was shipped to operate at 115 VAC, 50/60 Hz.

A good earth ground is essential for the proper operation of this game or for that matter, any electronic device. Problems with instability and erratic operation of computer-type devices can usually be traced to an ineffective ground system. Therefore, plug the game into a properly wired three prong outlet. If a three prong to a two prong AC adaptor must be used, an alternate method of grounding the third prong must be used.

INITIAL ADJUSTMENTS

NOTE: When the game is connected to AC power, one of the game sounds may be heard. This is normal.

The audio level (volume) can be easily adjusted and THIS IS ACHIEVED BY ROTATION OF THE VOLUME POT LOCATED ON THE COIN DOOR. The audio level should compete with other machines "on the floor" to maximize play time.

Display brightness is another easy adjustment. Keep the brightness at the correct level for appeal.

OPERATOR OPTIONS

The option switches allow you to select how many cannons per game, how many coins per credit, and a test pattern for the Vectorbeam monitor. The option switch is located on the logic board. See the logic option switch diagram for switch settings.

BOXING BUGS
OPTION SWITCHES

LOCATED ON LOGIC BOARD AT POSITION E-2

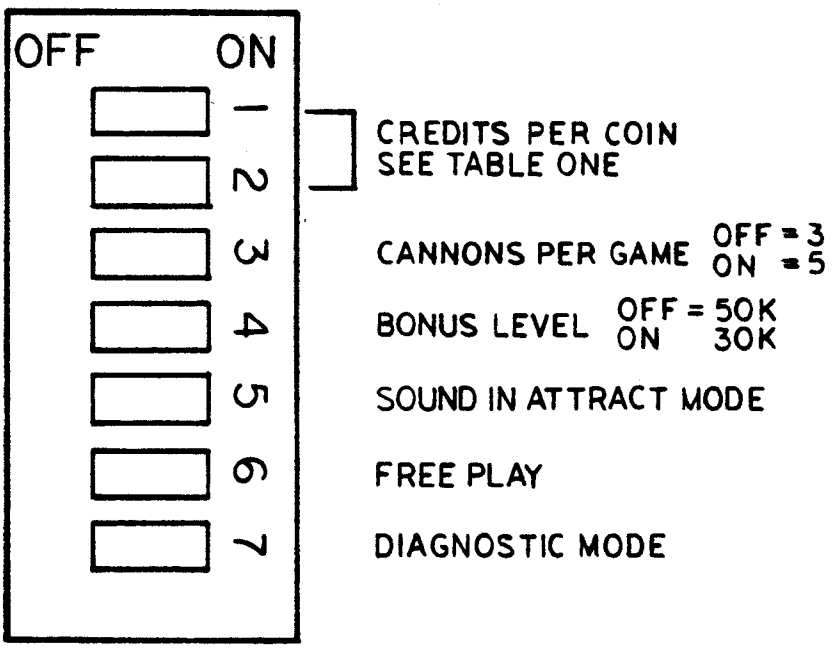

TABLE I

SWITCH 1	SWITCH 2	CREDIT/COIN
OFF	OFF	1/1
OFF	ON	1/2
ON	OFF	3/2
ON	ON	3/4

SECTION 3

GENERAL INFORMATION AND PERIODIC MAINTENANCE

Your Cinematronics' game is designed much the same as conventional video games. The major exception is the use of an alternate means of visual display . . . the Vectorbeam monitoring system. Otherwise, the game is built of the same basic building blocks as any other video game.

POWER SUPPLY

The power supply provides all the necessary voltages for the monitor, circuit boards and fluorescent lamp. As you look into the back of the cabinet, it is located on the lower left side of the cabinet. The power supply has two circuit breakers, and a three ampere slo-blo fuse. If one circuit breaker trips, the other breaker will soon follow. Always unplug the game before replacing the fuse or resetting the circuit breakers. If you need to replace the fuse, use only a three amp slo-blo fuse. The power supply also has a line voltage select switch that must be set to match the voltage in your area. There is also an adjustment for the +5 volt section. DO NOT ADJUST unless you use a volt meter and follow the procedure in Section 6. If needed, this power supply is directly interchangeable with the power supplies used in previous Cinematronics' games.

CPU AND 32K BOARDS

The Central Processing Unit (CPU) is the "brain" of the game. As you look into the back of the cabinet, it is the large PC (printed circuit) board on the right side. It "senses" when a coin is dropped in the coin slot, operates the coin meter, and gives credit. It then "reads" what is happening at the operator controls, interprets and computes to make the game play according to what buttons the player pushes. It tells the monitor what to draw on the screen, and it tells the audio board when to make the appropriate sound effect. The CPU has a red LED (light-emitting diode), near the Molex power plug. This LED normally flashes once when power is turned on, then stays off. More on this in Section 6. Mounted piggyback fashion on top of the CPU board is the 32K memory board. This merely increases the cerebral capacity of the CPU board.

AUDIO BOARD

The audio board generates all the sound effects for the game and powers the loudspeaker. As you look in the back of the cabinet, it is the smaller PC board on the right side, just above the CPU.

COLOR INTERFACE BOARD

The color interface board takes the output of the CPU board and sends X, Y coordinate information along with red, green and blue data to the color monitor. NOTE: OUR COLOR INTERFACE BOARD IS SIMILAR TO THOSE IN OTHER VIDEO GAMES THAT YOU HAVE SEEN. HOWEVER, WE SUGGEST YOU SPEND SOME TIME FAMILIARIZING YOURSELF WITH THE SCHEMATIC AND THEORY OF OPERATION OF THIS BOARD.

COLOR MONITOR

The monitor draws pictures on the picture tube screen according to the instructions it receives from the color interface board. If it does not receive correct data, it will pop the circuit breakers.

The monitor is a completely different system from the standard raster-type monitor. Two advantages to this monitor are:

1. circuitry is simplified, and
2. ability to draw fine detail in the picture far surpasses conventional monitors, adding interest to the game.

If your monitor should need repair in the future, the technician should be familiar with the monitor, because it is so different from the conventional raster system.

HARNESS AND CABLES

Interconnecting cables are of two types: The Main Wiring Harness and the Ribbon Connectors.

The Main Wiring Harness carries power from the power supply to the various units of the game. It connects to each unit through the Molex plugs. The Molex plugs are built so they can only plug in the right way. NEVER CONNECT OR DISCONNECT THE MOLEX POWER PLUGS UNLESS THE GAME IS UNPLUGGED.

The Ribbon Connectors carry data to and from the CPU. Since they can plug in two different ways, care should be taken to plug them in correctly.

SECTION 4

OPERATOR'S GUIDE TO TROUBLESHOOTING

1. CHECKING THE LED:

Whenever there is a problem with the game, a good place to check first is the LED (light-ermitting diode) on the CPU board near the Molex power plug. This LED indicates whether most of the CPU circuit is working. When everything works right, here is what happens: Power to the game is turned on, the LED flashes on, then stays off. If the LED is flickering or on continuously, there is a problem with the CPU, the +5 volt supply or the 32K memory board. Check +5 volts on the logic board (follow procedures in this section). If the +5 is okay, have CPU repaired.

2. CHECKING THE +5 VOLT SUPPLY:

To check the +5 volts, you need a voltmeter. Turn power on in the game. Notice on the upper corner of the logic board nearest you is a little pin marked gnd. This is a great place to put the negative probe of the voltmeter. Near this pin in position T13 (see CPU layout, in appendix) is a 20 pin IC marked 74LS377. Ignore the other numbers on this chip. We can measure the +5 volt supply at pin 20. Pin 20 is the bottom pin on the far side of the chip. Put your positive probe there, without touching any other pins, and you should get a reading. Anything between +4.8 volts and +5.1 volts is okay, otherwise, adjust the voltage.

The adjustment is located on the power supply and it is the only screwdriver adjustment on the power supply. Adjust slowly WHILE READING THE VOLTAGE. Too much voltage will destroy IC's fast. If voltage cannot be adjusted into the correct range (+4.8 - +5.1 volts), repair power supply.

3. FUSES ON THE AUDIO BOARD:

The audio board has two fuses mounted on it. Next to each fuse is an LED. These LED's are normally lit. If an LED is not lit, the corresponding fuse is bad. If either of these two fuses is bad, the power amp section on the audio board is probably defective.

4. TRIPPED CIRCUIT BREAKERS:

The flow diagram on the following page will help you isolate problems that are associated with tripped circuit breakers.

The following Flow Diagram will help you isolate problems that are associated with tripped circuit breakers:

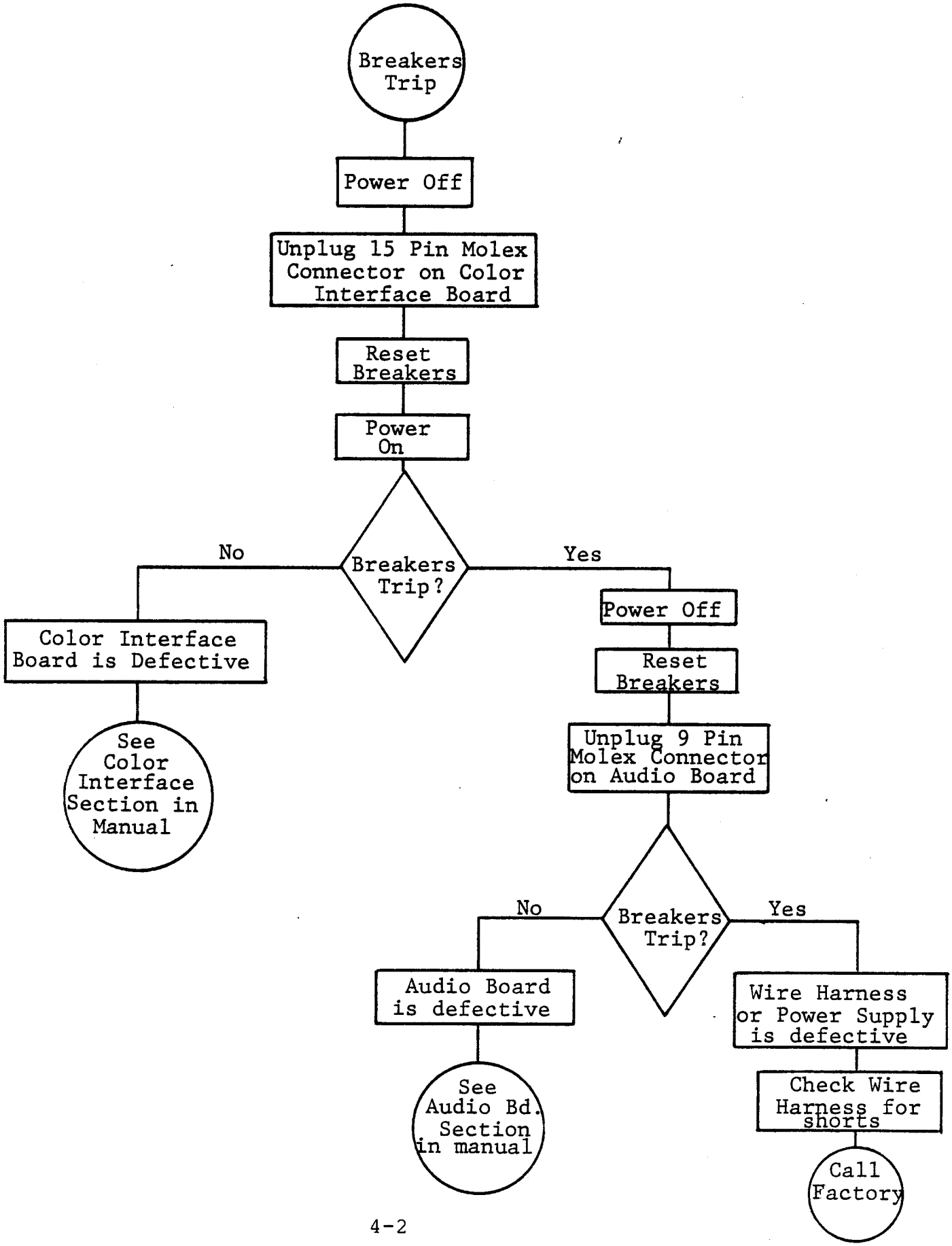

PART TWO

Information for Technicians

SECTION 5

VECTOR THEORY

In order to understand the basic concept behind a vector generated display, it is important to have a basic knowledge of vector theory.

In the vector display system, there are no horizontal and vertical lines (no sweep) or sync. A line generated using a vector system is shown in Figure 5-1.

A line is drawn by programming a beginning and ending point of the line to be drawn, and forcing the cathode beam to travel between these two points, illuminating the entire path on the screen of the CRT. The angle of the line, the position of the line, and the length of the line are determined simultaneously, and simply, by selecting the proper voltage levels for the beginning and ending points of the line.

This is accomplished by the two twelve-bit codes (words) applied to the DAC-80's on the display board. The DAC-80 will produce a different voltage level at its output for each possible combination of input bits (of which there are 4096 possibilities for a 12-bit word).

It is also important to remember the function of the LF 13331 analog switch and its output RC network. Because we are dealing with reactive components in C101 and C201 on the display board, the charging voltages found are non-linear by nature. (See Figure 5-2.)

Therefore, when a line appears on the CRT, it is actually only part of the entire path taken between the beginning and ending points of the vector (C-D). The section of A-B is chosen as the most linear portion of the charge curve, and is illuminated.

Sections C-A and B-D are blanked at the cathode and section A-B illuminated by controlling the 74LS374's on the color interface board. These calculations are all performed on the CPU logic board.

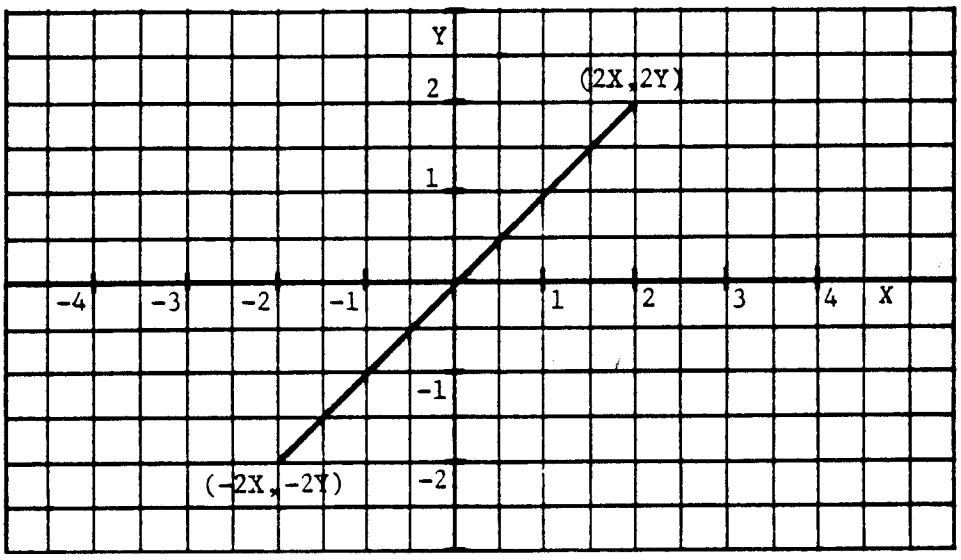

Figure 5-1. Line using Vector System

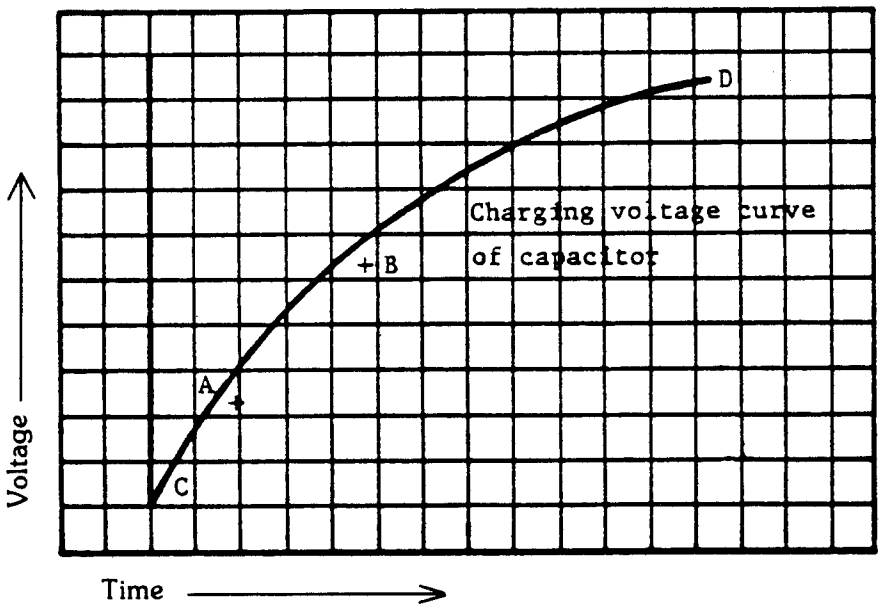

Figure 5-2. Non-linear Charging Voltages

When a line appears on the CRT, it is actually only part (section A-B), of the entire path taken between the beginning and ending points of the vector (section C-D). Section A-B is chosen as the most linear portion of the charge curve, and illuminated.

SECTION 6

THEORY OF OPERATION

GENERAL DESCRIPTION

This section describes the principles of operation of the major circuit functions of the Cinematronics Video Game. The system's general functional description includes trouble shooting techniques and is followed by detailed circuit schematics which are included as Appendix A. The schematics used in this manual are similar in nature to those used by most industrial electronic firms.

WELLS-GARDNER COLOR MONITOR

The Wells-Gardner displays vectors (lines) generated from X-Y coordinates originated from the logic board and processed through the Color Interface Board. The horizontal points are X (width) and the vertical points are Y (height).

Some basic checks of the Well-Gardner monitor are included in the Trouble Shooting (Section 7) portion of this manual. Further information for technical description or repair of the monitor may be obtained from Wells-Gardner directly or by calling the Cinematronics Customer Service Group.

AUDIO BOARD

CIRCUIT DESCRIPTION AND TROUBLESHOOTING GUIDE

GENERAL INFORMATION

The following section describes the theory of operation for the Boxing Bugs audio board. The last part of this section contains block diagrams of the audio board. The theory of operation of each block will be described along with test techniques to enable effective troubleshooting.

DEFINITIONS

TTL (Transistor - Transistor Logic) compatible levels are defined as follows:

1. A TTL "low" or logic 0 is any voltage less than 0.8 volts.

2. A TTL "high" or logic 1 is any voltage less greater +2.4 volts. VCO: Voltage Controlled Oscillator CCA: Current Controlled Amplifier U: Integrated Circuit (chip)

NOTATION

A particular pin of an IC (Integrated Circuit) is denoted in the text by first the chip designation and then the pin number: e.g. U25-10 means pin 10 of U25.

Jumper patches W1 thru W12 are sections of traces on the audio board designed to be severed in order to isolate a section of circuitry for test purposes. Be sure to sever between the two eyelets, one round and the other square. The orientation of these pads is the same on the board as on the schematic diagram. Repair by adding a short jumper wire into the holes provided.

DO NOT repair any trace by adding a blob of solder at the sever. This will cause intermittent operation.

TEST PROCEDURE
(refer to Sheet 6 of the Schematics)

To verify proper operation of U30,U40 and U50 disconnect the 16-pin ribbon cable at J2 and decrease the volume. Check U30-2, 4 and 6, U40-8, 10 and 12 with a logic probe, scope, or meter. They should read high or 2.4vdc - 5vdc (Logic 1).

Check for proper signal shaping as follows:

1 Wave form at U50-3.9, 11 and 13 should be normal square wave .

2 Wave form at U30-9, 11 and 13 should have longer leading edge .

3 Wave form at U30-2, 4 and 6 should have shorter time duration and slightly lower amplitude: 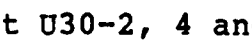 This circuit is designed to filter out signal glitches but allow proper input signals to pass.

Next, with a test lead, ground U50-9. U50-2 should now measure low or 0 to 4 vdc. Follow this procedure for the other six pairs of Schmitt-Trigger circuits.

To verify proper operation of U49 and U39, Load all lows into their output ports by tying U50-1 to ground. Using another test lead connected to ground tap, U50-13 twenty times. Outputs QA-QH on both IC's should measure low.

Repeat the above procedure, but remove the grounded test lead from U50-1. This should load all highs into all

the output ports.

To check U47, first, load U49 with all lows and tap pin 11 with the grounded test lead and measure low. Next, load U49 with all highs and again tap U47 pin 11 with the grounded test lead. The outputs should be high.

To check U's 48 and 38 load U's 49 and 39 with all lows and tap a grounded test lead to U45-10. Measure the outputs 1Q-8Q on each. They should all measure low. To load all highs into U48 and U38, load all highs into U49 and U39, and tap U45-10 with the grounded test lead. NOTE: if problems are encountered here the music gating circuit may be at fault. Refer to its troubleshooting procedure if necessary.

5MHZ CLOCK CIRCUIT
(Test Procedure)

With a logic probe verify U2-12 is switching high and low or measure a 20MHz square-wave with a scope. U23-5 and 6 should measure 10MHz square-wave and U23-8 and 9 should measure 5MHz square-wave.

To verify proper operation of the Divide-by-Eleven circuit, tie one end of a test lead to ground and connect the other end to TP1. U24-6 should be high. Pins 11, 12, 13, 14 and 15 of U43 should all be toggling. Move the ground from TP1 to pin 9 of U43. Pins 11 and 13 should be low, pins 12 & 14 should be high. Remove the ground lead from Pin 9. Check the outputs of U33. Pins 2 and 3 should be toggling and measure 227KHz.

NOISE GENERATOR

The noise generator circuitry is composed of U62, a digital noise generator, a DC blocking network C48 and R129 and a voltage follower U63. Both outputs have a minimum amplitude of 11.5v P-P, with the wave form at U63-6 centered around ground.

Test Procedure

Check for proper amplitude signal at outputs, (U62-3 and U63-6). U63-6 will read approximately 2.5vrms or 11.5v P-P.

POWER CIRCUITRY CHECKOUT

25 volts

A) With power applied to board, both L.E.D.'s on boards should be lit, indicating presence of plus and minus 25v.

1 If not lit, check fuse(s) on board.

2 25 volts (plus or minus) must be present at U69 and U68 input pins.
a) If not, check U69 (or U68) and D1 (or D4) for shorts.

15 volts

A) 15 volts (plus or minus) must be present at U69 and U68 output pins.

1 If not check U69 (or U68), D1 (or D4) and D2 (or D3) for shorts.

2 Verify 25 volts (plus or minus) present at input pins of U69 (or U68).

+5 volts

A) Verify +5 volts (from main power supply) present at J1-9.

+2.2 volts

A) Transistor Q1 and R6, R7 and R8 provide 2.2 volts to Q2 and Q18.

1 +2.2 volts should be present at emitter of Q1.

2 +5 volts should be present at collector of Q1.

QUICK CHECK PROCEDURE

At this point, all of the sounds generated on the audio board can be checked. Follow the above procedure for loading all "ones" into the control latch U47. The Bug Pushing A and B sounds should be turned on at this time. To turn them off, ground U47 pin 12 and 15 with a test lead. With another test lead, tap the following pin numbers on U47 to activate the corresponding sounds.

SOUND CHECK TABLE

Pin number on U47	Sound
2	Soft Explosion
5	Loud Explosion
6	Chirping Birds

9	Eggs Cracking
16	Beetle Dying
19	Beetle on Screen

To check the Music circuit, load all "ones" into the output latches, U48, U38 & U47 as described above. Ground U47-12 and 15 with a test load to disable the Bug Pushing A and B sound. With another test lead, ground either pin 6 or 9 of U48 to enable the music amplitude signal. With yet another grounded test lead, tap pins 12, 15, 16, & 19 on U48 and pins 2, 5, 6 & 9 on U38. A different tone should be heard for each grounded pin.

MASTER CLOCK CIRCUITRY

(Refer to Block Diagram 2)

The crystal and 3 inverters (1/2 U2) constitute a 20MHz oscillator. U23 is a J-K flip-flop used to divide the 20MHz down to 5MHz. U43 and U24 together constitute a divided by eleven circuit. This is accomplished as follows: U43 is a presettable binary counter. By preloading the input with five (pins 3 & 5 pulled high and 4 & 6 grounded), the counter starts counting from 5 to 15 every time a clock pulse arrives at pin 2. At fifteen a carry pulse is generated at Pin 15 and is fed to Pin 2 of a D-flip-flop (U24). The output of U24 then goes low for one clock pulse. The low is fed to the load input of the counter and it starts counting from 5 to 15 all over again. Thus, the frequency at the output of U24 is 5MHz/11. This signal is then fed to a J-K flip-flop which toggles every time a clock pulse occurs at Pin 12, making the output 1/2 its clock input of 227KHz.

Two Phase Clock

The two phase clock utilizes both halves of a 74LS74(U29). This circuit generated 2 square wave 90 degrees out of phase and their compliments. This phasing insures that U27-2, U28-2 and U24-11 are clocked in sequence.

Divide-By-23 and Load Control Circuit

U27 &U28 comprise an 8-bit binary counter. When the "B Load-" signal appearing at Pin 9 of both U27 & U28 goes low and each gets clocked, the binary equivalent of 233 gets preloaded into the 8-bit binary counter. After 23 clock cycles, the carry output of U27 (Pin 15) goes high. During the same clock cycle, this signal, also appearing at U24-12, get clocked through causing U24-8 (B Load-) to go low. Consequently the binary counter is again preloaded with 233 and the cycle repeats itself. The output of this circuit is joined with the output of the bell circuit by Current

Controlled Amplifier U61.

Divide-By Two Circuit

This circuit simple consists of a J-K flip-flop (U34) which is wired such that the output toggles every clock pulse.

Divide-By-32

This circuit is simply two cascaded 4-bit binary counters (U26). Pin 9 is a square wave which toggles every 16 clock pulses appearing at Pin 1.

Trouble Shooting

(Refer to Sheet 1 and 3 of Schematics)

Load all "ones" in the output latch, U47 as described in the input control circuitry. Monitor the signal at U19-3. It should be a square wave with a period of about 140msec. Check the signals appearing at Pins 5, 6, 8, 9 of U29. They should all be square wave with a period about 12.8usec. To insure proper operation of U's 27 & 28, ground TP5 with a test lead. U24-8 should remain high so U27 & 24 will act as standard binary counters. With a logic probe or scope, check pin 11-15 on each IC. All should be toggling. Remove the ground from TP5 and move it to U24-8. Again check the outputs of U27 & 24. Pins 11, 12, 13, 15 of U28 and 11, 13, 14, 15 of U27 will be low. Pins U28-14 and U27-12 will be high. Remove the ground from U24-8. Check pins 3-6 & 8-11 of U26. All should be toggling.

LOUD EXPLOSION

(Refer to Block Diagram 3)

The loud explosion is activated whenever the cannon is blown up. The basic components of this circuit are white noise, from the digital noise generator, a low pass filter, a current controlled amplifier (CCA), an envelope control circuit and a voltage switch.

Low Pass Filter: R130, -R134, C49 and C50

The output of the noise generator circuit is fed into the low pass filter, R130, -R134, C49 and U50. The filtered output is then fed directly into the CCA(U64).

Current Controlled Amplifier (CCA): U64

(Refer to Figure 1)

U64 can be imagined as an amplifier that generates a current wave form at Pin 6 characteristic of the voltage appearing at Pin 2. The gain of the output is proportional to the amount of current injected into Pin 5.

Envelope Control: R141 and C51

R141 limits the amount of current injected into Pin 5 of the CCA and the RC time constant of R26 & C51 determines the envelope or decay time of the output waveform at Pin 6.

Voltage Switch: R135 & R136; Q23 & Q24

The circuit is turned on by placing a low level at the junction of R135 & R136. Q23 gets forward biased and turns on. This subsequently forward biases Q24 and injects current into the CCA.

Test Procedure

(Refer to Sheet 4 of Schematics)

A. Disconnect J2 from CPU board.

B. Load "ones" into input latch U47 per input control circuitry section procedure.

C. Junction of R135 & R136 should be about +5vdc.

D. Ground junction of R135 & R136

1 Collector of Q23 caused to switch from -3.5vdc to about +5vdc.

2 Q24 should forward bias; collector change from about -14.5vdc to about +5vdc.

E. If voltage switch suspect, cut jumper W5.

1 Tap grounded test lead to square pad W5.
a) Explosion should be heard when current injected into CCA.

2 If no explosion heard, verify functioning of noise generator.
a) Verify R130 is receiving the noise signal.

F. If bell, music or bounce sounds work (reference Quick Check Procedure), replace U64.

G. If sounds per section F do not work, check voltage follower circuit (see voltage follower section).

H. If voltage follower operates, check associated CA3080's for shorts (U59, U61, U67).

1 Isolate each CCA by cutting appropriate test jumper until explosion circuit works.

Voltage Follower

(Block Diagram 11e R159, U55 & U54)

R159 converts the total current output of all the CA3080's to a voltage. Since this is a high impedance point, U55 is used to amplify the signal at Pin 3 before feeding it to the pot driver (U54).

Test Procedure

(Refer to Sheet 4 of Schematics)

A. U55 should be functioning if any of the following sounds work.

1 Music, loud and soft explosions, bell, bounce.

If none of sounds in (1) work, cut W7

1 Apply known good signal (with a test lead) to square pad of W7.
   a) Use Pin 6 of U63 (noise generator) for source.

2 Noise signal should be present on speaker if input control latch (U47) set up properly to turn off all other sounds.

SOFT EXPLOSION

(Refer to Block Diagram 3)

The soft explosion is heard whenever a bomb goes off. The technical description is identical to that of the loud explosion. The difference between the two circuits only being the component values in the envelope control circuitry giving the sound a faster decay time and lower volume.

Test Procedure

(Refer to Sheet 4 of Schematics)

See Test Procedure for Loud Explosion.

BELL

(Refer to Block Diagram 4)

The Bell sound is heard at the beginning of each round and whenever a flying beetle is hit. The technical description is identical to that of the loud explosion sound. The differences between the two circuits are different component values in the envelope control circuitry. These are responsible for a different frequency response, amplitude, attack and decay times. No low pass filter is used to feed the CCA, rather the output of the Divide-By 23 and Load Control circuit to Pin 2 of the CCA U59.

Test Procedure

(Refer to Sheet 1 of Schematics)

See Test Procedure for Loud Explosion sound, and Divide-By 23 and Load Control circuits.

CANNON

(Refer to Block Diagram 5)

The cannon sound is heard whenever the cannon is fired. The circuitry to create this sound consists of a low leakage switch, voltage controlled oscillator (VCO), TTL level converter, and a binary counter.

A low level applied to the input of the low leakage switch causes a change in voltage at Pin 5 of the VCO (U60). This control voltage causes the frequency at the output of the VCO to sweep up. As the signal rides on a DC level, a coupling capacitor is used to A-C couple the signal to a bipolar- to-TTL the level converter consisting of R122-124, Q22, D21 and D22. This signal is then fed into a binary counter (U13) where it is divided by four. The signal is then adjusted for volume by R125-127and A-C coupled by C46 before being sent to the summing junction.

Test Procedure

(Refer to Sheet 4 of Schematics)

Load all "ones" into the output latch U47, as described in the Input Control Circuitry section. With a test lead, ground U47-12 & 15 to disable the Bug Pushing A & B sounds.

Measure the collector of Q20. With another grounded test lead, tap the junction of R113 & R114, it should switch from -3.5vdc to about +5vdc. Next measure the collector of Q21. It should switch from +14vdc to GND. Pin 5 of U60 should switch from about +14vdc to about +12.5vdc.

If there is any doubt concerning the operation of Q21, lift R119 on the Q21 side. A grounded test lead may be used to simulate the action of Q21 by touching the test lead to the lifted end of R119.

Next, measure the frequency at Pin 3 of U60 with R113-114 ungrounded. It should have a period of about 0.86ms and be riding on a +6vdc level. It should be approximately 8V P-P in amplitude. Next ground the junction of R113-114. The period should be about 0.2ms. Remove the ground from the junction of R113 & 114.

Next check the collector of Q22. The period should be identical to the signal at U60-3, and have TTL compatible levels.

To insure proper operation of the binary counter (U13) monitor Pin 1. Again the signal here should be identical to that of the collector of Q22. Pin 2 should be high as well as Pins 3 through 6. Next ground the junction of R113 & 114. U13 Pin 2 should now also be grounded and the output Pins 3-6 should be toggling.

BOUNCE

(Refer to Block Diagram 6)

The Bounce sound is heard if a bug is bouncing off the ring, or if anything is hit by the cannon.

The circuitry to create this sound consists of a low leakage switch, voltage controlled oscillator (VCO), a voltage switch, an envelope control circuit, a current controlled amplifier (CCA) and a driver circuit to provide an AC component.

Low leakage switch and VCO (Q16 & 17 and U57). This portion of the circuit is identical to that found in the Cannon section, except the signal is fed to Pin 2 of the CCA rather than to the TTL level converter of the Cannon Circuit.

Voltage Switch

(Q18 & Q19), Envelope Control R110 & C41 and CCA Circuit (U59)

This portion of the circuit is identical to that found in the Loud Explosion section. NOTE: That the low pass filter of the explosion circuit is not used.

Driver Circuit

This circuit uses U58 as a driver to inject an AC waveform into the DC signal at Pin 5 of U57.

Test Procedure

(Refer to Sheet 3 of Schematics)

See Test Procedure for Cannon to test the Low Leakage Switch and VCO portion.

See Test Procedure for Loud Explosion to test the Voltage Switch, Envelope Control and CCA circuits.

To check the Driver Circuit, use a scope to verify the presence of AC waveform at Pin 5 of U57.

BEETLE ON SCREEN

(Refer to Block Diagram 7)

The Beetle on Screen sound is heard whenever a flying beetle appears on screen.

The circuitry to create this sound consists of a gated oscillator, a low leakage switch, voltage controlled oscillator (VCO), TTL level converter and a binary counter.

Gated Oscillator

(Refer to Sheet 3 of Schematics)

The gated oscillator consists of U19, R73-75 and C29 & 30. The output of the oscillator, a pulse train with a period of 140 micro-seconds is fed to U20 for squaring. The output from U20-4 is fed to the low leakage switch.

Low Leakage Switch, VCO, TTL Level Converter and Binary Counter

This portion of the Beetle on Screen circuitry is similar to that of the Cannon circuit. For a technical description, see the Cannon Section.

Test Procedure
(Refer to Sheet 3 of Schematics)

See Test Procedure for Cannon, with this exception:

1 After output latch U47 is set up, check output of gated oscillator U19, Pin 3 for a pulse train with period of 140 msec (7.14Khz).

2 Check for same pulse train, after squaring, at U20 Pin 4.

3 Proceed with Cannon Test Procedure.

EGG CRACKING

(Refer to Block Diagram 8)

The Egg Cracking sound is heard whenever an egg laid by a flying beetle, is cracking open.

The technical description is nearly identical to that of the Cannon sound. The difference between the two circuits is that the Egg Cracking signal is fed to the low leakage switch through an inverter, U31 and the output of the Egg Cracking circuit from the binary counter is obtained from 3 outputs of U22 (instead of one) and combined in a summing junction of resistors R68-R70.

Test Procedure
(Refer to Sheet 3 of Schematics)

See Test Procedure for Cannon.

MUSIC
(Refer to Block Diagram 9)

Various musical tones are played when the game begins, when a player receives a bonus round or bonus cannon, and with every cartoon (starting at round 2 and every 3rd round thereafter).

The circuitry involved consists of two phase clock; a 12-bit divide-by-N counter, which determines the musical note to be generated; a music load control, used to reload the frequency select lines into the divide-by-N circuit; a music latch clock gating circuit which insures that the frequency select lines do not change during a load operation; a current controlled amplifier; two voltage switches and amplitude control networks.

Two Phase Clock Generator

The two phase clock generator utilizes both halves of U44. It outputs two square-waves 90 degrees out of phase and their compliments. These four clock signals are used to clock U46-1, U36-1, U37-1, and U25-11 in sequence.

12-Bit Divide-By-N Counter

U46, 36 and 37 are 4-bit binary counters cascaded to form a 12-bit counter. When the "M Load-" signal goes low at Pin 9 of each counter and all three get clocked, the data appearing at pins 3 through 6 of U46, 36 and 37 gets preloaded into the counters. This data is referred to as the number N. After 4096-N clock pulses, the carry output of U46 (Pin 15) goes high causing the "M Load-" signal to go low and the data appearing at the counter inputs is again loaded and the sequence is repeated.

Digital Music Output

The compliment of the "M Load-" signal at U25-9 is fed to pin 9 of U34. For every pulse appearing at U34-9 the "D Music +" signal at U34-5 toggles. This signal then would have one half the frequency of the incoming clock, and is always a square wave.

Music Latch Clock Gating Circuit

This circuit is composed of U's 15, 25, 35, and 45. When the CPU wants to change the frequency select lines, it sends a pulse to connector J2-11. This pulse arrives at U25-3 and forces U25-6 low. This sets the "REQ" (request) signal at U35-9 low. If no M load operation is in progress, then U35-10 goes high. When MBCLK + goes from a low-to-high transition at U45-11, U23-9 goes high and the frequency select input at U45-6 get latched to the outputs of U48 & 38.

Current Controlled Amplifier

The digital music signal from U34-5 is fed to a CCA, U67. For a technical description refer to the Loud Explosion Section.

Amplitude Controls

There are two set of amplitude controls for the music circuit; C72, C73, R193, R194, R201 and R202. These different combinations give the music circuit more versatility by allowing different volume and envelope characteristics. For a technical description, refer to the Envelope discussion under the Loud Explosion Section.

Voltage Switches

There are two voltage switches whose input come from U48 pins 6 & 9. (These voltage switches consist of Q31 thru Q34 and associated resistors.) For a technical description, refer to the Loud Explosion Section.

Trouble Shooting

With a logic probe verify that U44 pins 5, 6, 8 and 9 all toggle.

To verify proper operation of the 12 bit counter (U46, U36 and U37), ground TP2 with a test lead. With a logic probe check pins 11 thru 15 on all 3 counters, they should all be toggling.

Next, move the grounded test lead from TP2 to U25 Pin 8. Load all "ones" into U48 and U38 (refer to Input Control Section). With a logic probe check pins 11 thru 14 on all 3 counters, they should all be high.

Using a second grounded test lead, ground U46-6. Verify that U8-11 is now low. Repeat this procedure for pins 11 thru 14 on U46, U36 and U37.

Remove the grounded test lead from U25-8 and place it on U48-12. The carry outputs of all three counters should be pulsing;.....also check for activity at U25 pins 8, 9 and 12; and at U34 pins 5 and 9.

OUTPUT AMPLIFIER
(Refer to Block Diagram 11)

The output amplifier section consists of a preamp and volume pot driver U55 (TL081), main driver amp U70 (TL081) and speaker drive transistors Q27 and Q28. U54 drives the external volume pot located on the coin door and its associated cable. If little or no volume is heard, use an ohmmeter to meter the pot wires between J1-8 and J1-3. The resistance should vary as the pot is rotated. If the audio is at maximum volume regardless of the pot position, suspect an open lead between ground and the pot lead connected to connector J1-1. The final drive is a noninverting amplifier circuit containing U70, Q27 and Q28. Observe the waveform at the speaker wire which is the emitter junction of Q27 and Q28. If the upper half of any sound waveform appears clipped, suspect Q27. For the lower half, Q28 is the suspect. For no audio, meter Q27 and Q28 out of circuit and look for burned resistors R152 and R153. Also check diodes D23 and D24 at this time.

BUG PUSHING (A & B)

The Bug Pushing sound is heard whenever a bug is pushing a bomb.

The circuit is two 4-bit binary counters (U21) dividing a 588msec pulse input by 8 (for "A") or by 16 (for "B"). The outputs of both are adjusted for level and AC coupled to the pre-amp CCA summing junction. The Bug Pushing A & B signals are fed into the 4-bit counters through inverters U31, pins 2 and 12.

Test Procedure
(Refer to Sheet 4 of Schematics)

A. Load "ones" into input latch U47 per input control circuitry section procedure.

B. Ground U31-9 (to check "A" circuit) U31-11 (to check "B" Circuit).

1 Output pins 3-6 (for "A") or 8-11 (for "B") should be toggling.

DYING BUG
(Refer to Block Diagram 11)

The Dying Bug sound is activated whenever a beetle dies on screen.

The basic components of this circuit are a low leakage switch, voltage controlled oscillator (VCO). TTL level converter and 3 binary counters. The technical description is similar to that of the Cannon circuit, with two additions. The input signal of the dying bug is fed through an inverter, U31, to the low leakage switch. The output of the TTL level converter is fed to two cascaded 4-bit binary counters, with a third binary counter feeding into the two cascaded counters. The output of the counters is fed to a summing junction (R51, 52 and 53) and AC coupled to the voltage follower circuit.

Test Procedure
(Refer to Sheet 2 of Schematics)

See Test Procedure for Cannon, with the following additions:

1 To check each of the three binary counters:

a) Ground pin 2 or 12 of U42 (pin 12 of U32 already grounded).

b) Output pins 3-6 and pins 8-11 of U42 should be toggling.

c) Check wave forms of U32.

1) Pin 13, pulse width of 3.27msec (305.8Khz)

2) Pin 8, pulse width of 52.32msec (19.1hz)

3) Pin 9, pulse width of 26.16msec (38.2hz)

CHIRPING BIRDS

(Refer to Block Diagram 14)

The Chirping Birds sound is activated whenever a beetle is knocked out.

This circuit consists of two major sections; a random noise generator circuit and the chirping birds sound circuit.

The random noise generator consists of a divide-by 64 circuit (U1), which is two cascaded 4-bit binary counters. Pin 10 is a square wave which toggles every 32 clock pulses appearing at Pin 12. This output feeds into the digital noise generator.

The digital noise generator section is comprised of one serial in-parallel out shift register. Four outputs from the shift register are mixed together via 3 exclusive-or gates. The resulting signal is then used two places: One is to feed an anti lock-up control circuit and the other is to provide the input data for the shift register through a fourth exclusive or gate. The output of the noise circuit is taken from the QH output of the shift register and fed to the input and to the first binary counter of the chirping birds sound circuit.

Shift Register

U11 is an 8-bit parallel output shift register. Random data is generated by the combination of the shift register in conjunction with a binary addition function. The clock signal for the shift register comes from the divide-by 64 circuit previously described.

Mixer

The mixer is made up of 3 exclusive-OR gates whose inputs are taken from the outputs of the shift register. The gates perform a logical addition of the four selected taps of the shift register. U12-11 is then fed back to the input of the shift register via a fourth exclusive or gate.

Anti Lock-Up Control

If at any time all outputs of the shift register become "ones", the input to the shift register will become a "one" and will lock-up in an all "ones" state. U32 is a binary counter wired up to provide the shift register with a reset pulse if it counts all "ones".

Chirping Birds Sound Circuit

The Chirping Birds sound circuit consists of a low leakage switch, voltage controlled oscillator (VCO), TTL level converter and 2 binary counters. The technical description is similar to that of the Cannon circuit, with two additions. The input to the circuit is the signal from the random noise generator, fed through an inverter, U31, to the low leakage switch. The output of the TTL level converter is fed to two cascaded 4-bit binary counters. The chirping birds enable signal from the CPU is fed to second binary counter. The output of the counter (U41-10) is fed through resister R47, R48 and R49 to reduce the volume, and AC coupled through C22 to the voltage follower circuit.

Test Procedure
(Refer to Sheet 2 of Schematics)

Divide-By 64 Circuit

1 Check wave forms at these points

a) Input U1 pin 1

1) Should be pulse width 588msec (1Khz)

b) Outputs, U1 pin 6

2) Should be pulse width 9.4msec (106Mhz)

c) Output U1 pin 10

3) Should be pulse width 37.4msec (26.7hz)

Digital Noise Generator

A. Ground Pin 11 of U12 with test lead

1 Using scope, monitor outputs of shift register U11 (QA through QH). They should all be toggling.

2 Pins 12 and 13 of U12 should also be toggling.

3 U32 will now act as a straight binary counter so its outputs should also be toggling.

Chirping Birds Sound Circuit

See Test Procedure for Cannon, with the following exceptions:

1 To check the binary counters:

a) Ground Pin 2 (or 12) of U41

b) Outputs pins 3-6 and 8-11 of U41 should be toggling.

SHAFT ENCODER

(Refer to Block Diagram 15)

The Shaft Encoder circuit is designed to supply information to the CPU board as to the position and direction of rotation of the shaft encoder on the control panel.

The shaft encoder circuit consists of two voltage comparators with hysteresis, two TTL level converters, a series of seven flip-flops supporting two up/down binary counters, and a quad 2-input multiplexer (U18).

The shaft encoder unit on the control panel provides two square-wave outputs, 90 degrees out of phase. The phase relationship of the two outputs (which one leads) determines the direction (clockwise or counter-clockwise -- CC or CCW) information used by the shaft encoder circuit.

Comparators

The comparators (U65 and U66) compare the shaft encoder outputs to the reference voltage (+2.5v taken from network R168, R170 and C62), and will nominally switch high when the input reaches 3.47 volts, which will switch pin 6 low (1.8v or below).

TTL Level Converter

Transistors Q29 and Q30 are bi-polar to TTL level converters, feeding thru inverters U20.

Direction Flip-Flop

The first half of U10 detects which direction (CW or CCW) the shaft encoder is being rotated using signals WC1+ and WC2+.

Control Logic Circuit

The second half of U10 and U8, U7 and U6 insure that signals reach the up/down counters at the proper times. U10 will send a change of direction signal (causing the counters to count up or down) at the proper time, as the up/down count pin 5 can only change when the clock pulse input (pin 14 of U16) is high.

U8 and U7 synchronize the input pulse to pin 14 of U16 to arrive at the proper time.

U6 is used to synchronize the halt signal from the CPU with the clock pulse on pin 14 of U16. The halt signal from the CPU will disable the counter.

Counter

U16 and U17 form an 8-bit up/down binary counter, counting the pulses received from the shaft encoder.

Multiplexer

U18 is a two input multiplexer. It allows the CPU to read either of the 4-bit outputs of the counter, depending on which set the CPU selects. The outputs from the multiplexer are fed to J2 and off to the CPU board.

Test Procedure

Comparators and associated circuits

A) Check for 2.5 volts on pin 2 of U65 and U66

1 If not present, and +5 volts OK, either U65 or U66 is bad

B) Ground J3 Pin 1

1 U65 pin 6 should measure 10 volts or above

2 Collector of Q29 should be .3 volts or less

3 U10 pin 2 should be high

C) Tie J3 pin 1 to +5 volts

1 U65 pin 6 should be -10 volts or below

2 Collector of Q29 should be high (around +5 volts)

3 U10 pin 2 should be low

D) Repeat "B" and "C" for U66 comparator, using J3 pin 3 instead of J3 pin 1.

Shaft Encoder and Direction Circuit

A) Monitor U10 pin 5 while rotating shaft encoder on control panel

1 Pin 5 should go high when shaft encoder rotated in one direction and low when rotated in the opposite direction.

2 If pin 5 does not respond correctly, either shaft encoder is bad or direction circuit is bad. Proceed with 3 to determine which.

3 Disconnect the shaft encoder.

a) Ground J3 pin 1. WC1 (U20 pin 6) should be high

b) With test probes attached to ground, and +5 volts, pulse J3 pin 3 to ground followed by a +5v pulse to J3-3, and another pulse to ground.

c) At this time, WC2+ (U20 pin 4) should be high and U10 pin 2 will latch a 1.

d) Leave J3 pin 3 at ground, pulse J3-1 with +5 volts

e) U10 pin 2 should go low

f) Pulse J3 pin 3 with +5 volts again

g) U10 pin 5 should go low, and U10 pin 9 will track U10 pin 5.

4 If all steps in" 3" are OK, all circuitry from J3 through U10 is good.

a) If board failed test A.1 and passed all

of test 3, the shaft encoder is bad.

Control Logic Circuit

A) Ground TP4; count flag should go high

B) Use a dual trace scope and sync the scope on A CLK+.

C) Check signals on the timing diagram (Schematic Sheet 5) to A CLK+.

D) To check out U8, remove ground from TP4 and ensure shaft encoder is hooked up.

1 Count flag should be low

2 Spin shaft encoder on control panel and check for pulse activity on U8 pin 5.

E) To check out U6, ground the inverter before U6 (ground U30 pin 3).

1 Pin 9 should go high, pin 8 should go low.

Counters

A) Ground U30 pin 3, (the inverter before U6).

1 U6 pin 9 should go low.

2 Ground TP4.U16 and U17 should now operate as a binary counter.

3 Rotating the shaft encoder will cause the counters to count up or down depending on what direction the shaft encoder is rotated.

4 Check the outputs of U16 and U17 for counts.

Multiplexer

A) Ground TP4

B) Force U10 pin 9 (L DIR+) to go low using test procedure for Direction Circuit, 3a through g.

1 Outputs of U18 should be low

2 Ground U18 pin 15

3 Pulse activity should be present on the outputs of the multiplexer.

C) Ground U50 pin 1 (inverter before Data + line).

1 U17 outputs will be selected. Verify long pulses present at outputs of U16 with scope.

D) Remove ground from U50 pin 1

1 U16 outputs will be selected. Verify short pulses present at outputs of U18 with scope.

SHAFT ENCODER

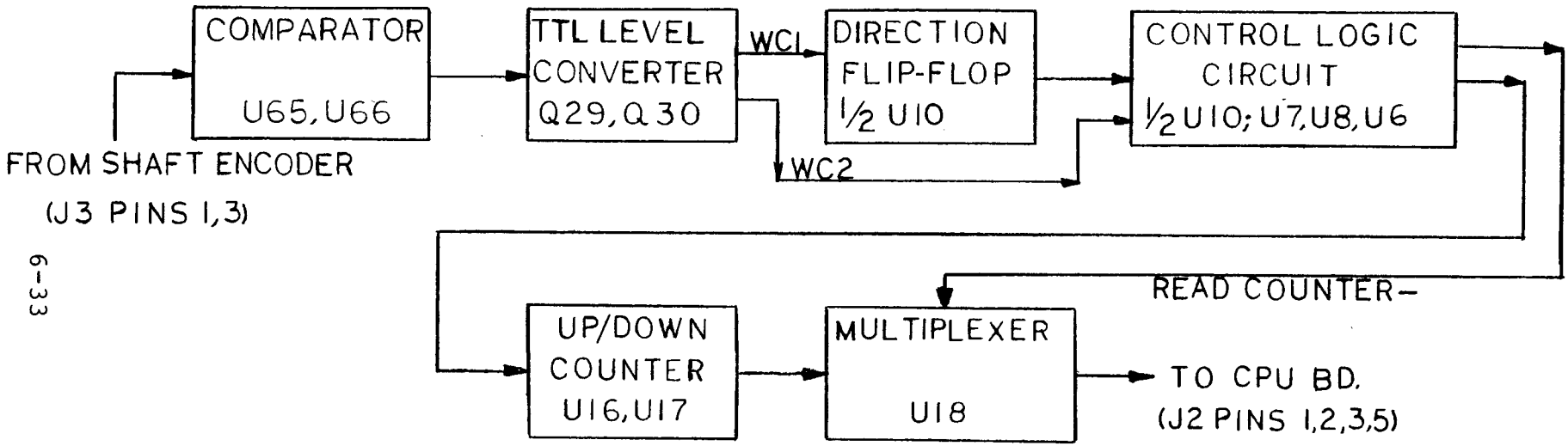

BLOCK DIAGRAM FIFTEEN

CPU BOARD

The processor hardware can be broken down into five basic functional blocks as shown in Figure 6-1. The arrows indicate the possible data flow directions between the various blocks. The ALU and Control block are the main components of the processor while the Memory and I/O blocks may be thought of as merely peripherals. Figure 6-2 is a detailed block diagram of the processor. The numbers in each block correspond to the entries in Table 6-1, which lists the IC numbers of the main components of each functional block.

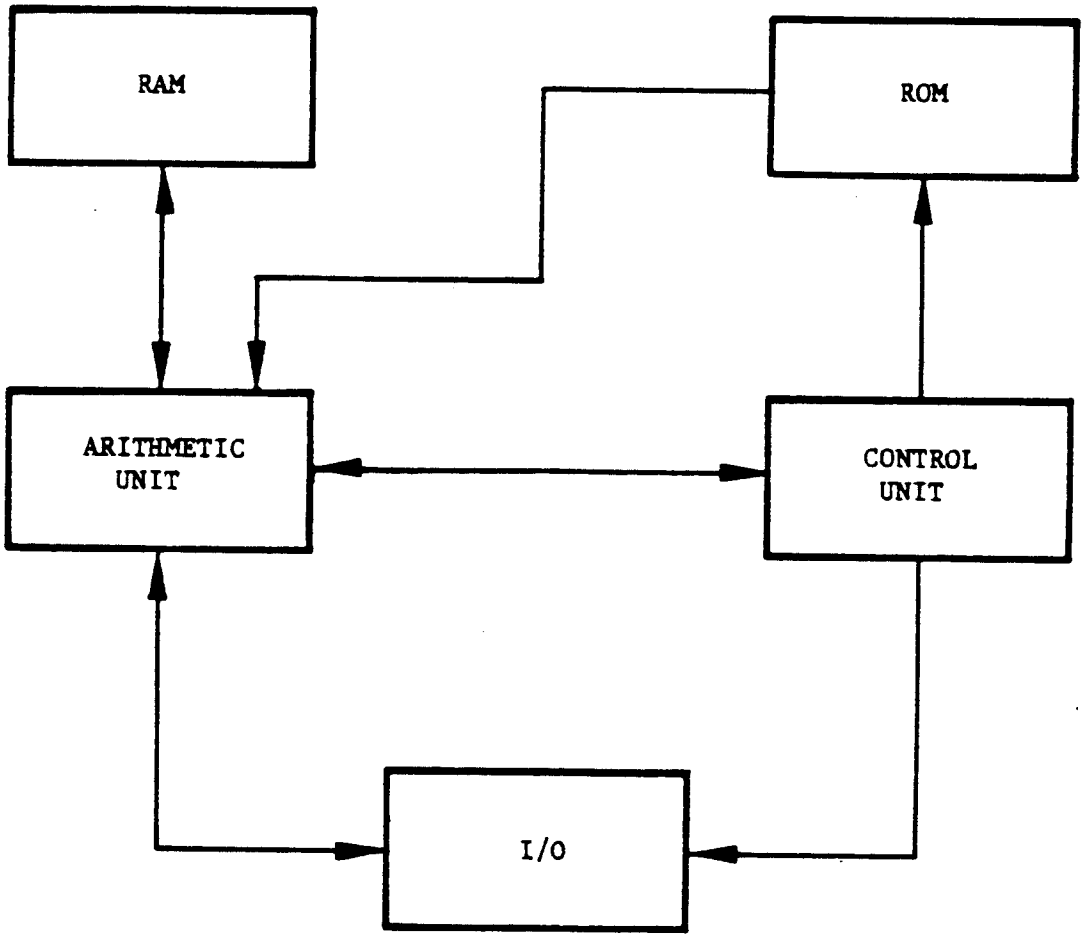

Figure 6-1. CPU Functional Block Diagram

The following is a brief description of each block shown in Figure 6-1. The numbers beside each functional block name are the numbers in Figure 6-2 which correspond to a particular function:

RAM (6)

The RAM is implemented with three read/write static memories configured as a 256 x 12 bit block. Data can be transferred to or from this memory via the ALU block. The processor uses this RAM as a scratch pad.

ROM (10)

The ROM is configured as a 32K x 8 bit block of memory. These memory locations contain the program instructions and/or data. It is accessed via the processor control unit.

I/O 19, 17, 18

The I/O block consists of 8 output lines implemented with a bit addressable latch, 24 input lines implemented with data selectors, and two 12 bit registers which are connected to the X Y display deflection circuits via D/A convertors.

Arithmetic Unit 1,2,3,4,5

The arithmetic unit performs all the arithmetic processing for the system. It consists primarily of two 12 bit accumulators, an arithmetic logic unit and various data selectors. The accumulators can function as temporary storage registers for arithmetic functions upon the data in the accumulators. The data selectors are used to select the various sources of data which will be processed.

Control Unit (15,16,14,7,8,9,11,12,13)

The control unit is the heart of the processor. It performs all instruction decoding operations and generates all the necessary control signals which the rest of the hardware requires to function correctly.

The following is a discussion of each block shown in Figure 6-2:

1. Accumulator Selector

The accumulator selector consists of 3 quad data selectors. They are used to select the output of either the primary or secondary accumulator for processing by various other sections of the systems.

2 & 3 Primary and Secondary Accumulators

The two 12 bit accumulators are implemented with quad bidirectional shift registers. The primary accumulator consists of S4, P4, M4. The secondary accumulator consists of T4, R4, N4. All data manipulation in the processor is accomplished using these two accumulators. All output data flows through these registers.

4. Arithmetic Logic Unit (ALU)

The ALU is used to perform all necessary arithmetic functions within the processor. The ALU is implemented using three 24LS181 (N6,M6,L6) function generators, three 74LS85 (N9,M9,L9) 4 bit magnitude comparators, and a 74LS182 (L4) look ahead carry generator. The data which the ALU manipulates can come from four different sources. The first source is the contents of the accumulators via the accumulator selector. The second and third sources are the ROM and RAM data outputs via the ALU data selector (N11, M11, L11) and the fourth source is the external input selector (E4, D4, C4).

5. Data Selector

The data selector is used to read data into the ALU from either the RAM or ROM memory. Note that the ROM data is only 8 bits wide while the RAM data is 12 bits wide.

6. RAM Storage

The system RAM consists of three 9101C high speed static memory chips connected as a 256 x 12 bit block. The block is 12 bits wide in order to allow the contents of an accumulator to be stored. The processor uses the RAM as temporary storage of program variables, data pointers or any other data of a dynamic nature.

7. RAM Address Selector/Register

The output of this register is tied directly to the address lines of the RAM. It consists of a multiplexer which routes address data from either the ROM or RAM locations to the RAM address lines. The capability to use RAM data to select RAM addresses is the basis for the indirect addressing mode of the processor.

8. Page Selector

The page selector is used to latch the high order 4 bits of a RAM access instructions.

9. ROM Data Register

The register is used to temporarily hold data from the ROM during an instruction fetch.

10. ROM Memory

The ROM memory consists of the actual memory chips plus a data selector and latch circuit. The latch is used to improve the memory access time during a two byte instruction fetch by allowing one byte of the instruction to be latched while the RAM address lines are decoded for the other byte. The data selector can then be used to rapidly access both bytes of the instruction by switching between the latch and memory outputs.

11. Instruction Register

The instruction register is a latch which holds the current op code as read from ROM. Its output is tied to the instruction decode circuitry which in turn generates the necessary signals to execute the instruction.

12. System Sequencer

The system sequencer is used to decode an instruction op code and to generate the appropriate timed sequence of signals which execute the instruction. The op code is decoded by using it as the address data to a set of decoder ROMS. The outputs of the decoder ROMS are then synchronized with the system clock and used to control the various system functional blocks.

13. Line Length Counter

The line length counter is used during the process of drawing a vector to control the length of a vector, by turning off the beam at a pre-determined time after the vector is initiated. The counter is loaded with a value from a line length ROM and then counts up until it overflows which in turn generates a signal to indicate the vector has been finished.

14. Program Address Selector

This selector is used to provide the address data to the program ROM. It selects either the program address counter output or the accumulator selector output and routes this data to the ROM address lines. The ability to use the accumulator

contents as address data allows the program to randomly access data tables stored in the ROM or to compute a branch address after a conditional test.

15. Program Address Counter

This is a 12 bit counter whose output defines the next location in ROM to be accessed. It is normally clocked sequentially to step through a program. However, it can be loaded with data from the program address register which is how the jump instructions are implemented.

16. Program Address-Register

This register is a latch used for temporary storage of an address which will be loaded into the program counter during a jump instruction. The input data to this latch can come from either the program ROM or the scratch-pad RAM.

17. Input Selector

The input selector is used to read the state of one of the 24 input lines into the selected accumulator. There are 16 primary inputs and 8 secondary inputs. During an input instruction, the upper 11 bits of the accumulator are set to zero while the least significant bit reflects the state of the input line. All input lines have pull up resistors on them so that they will read high if they are left unconnected.

18. Output Selector

The output selector is a bit addressable latch used to control the 8 output lines. During an output instruction, the selected output line is set to the complement of the least significant bit of the accumulator. The output lines are used to control the audio board, display intensity and the mechanical coin counter.

19. Display Registers

The display registers are the interface between the processor and the display driver circuits. These registers are latches into which the contents of the accumulators can be stored. The outputs are tied to D/A converters which provide the input voltage to the display deflection amplifiers.

TABLE 6-1. BLOCK NUMBERS AND COMPONENT I.C.

1. T-2, R-2, N-2
2. S-4, P-4, M-4
3. T-4, R-4, N-4
4. N-6, M-6, L-6, N-9, M-9, L-9
5. N-11, M-11, L-11
6. N-14, M-14, L-14
7. J-12, I-12
8. H-12
9. S-13
10. U-7, R-7, T-7, P-7, U-9, T-9, U-11, T-11
11. T-13
12. A-8, G-10, F-10, G-14, F-14, E-14, D-14, C-14
13. E-6, D-6, E-8, H-8, G-8, F-8
14. S-9, R-9, P-9
15. S-11, R-11, P-11
16. P-13, R-13
17. E-4, D-4, C-4
18. F-2
19. S-2, R-2, M-2

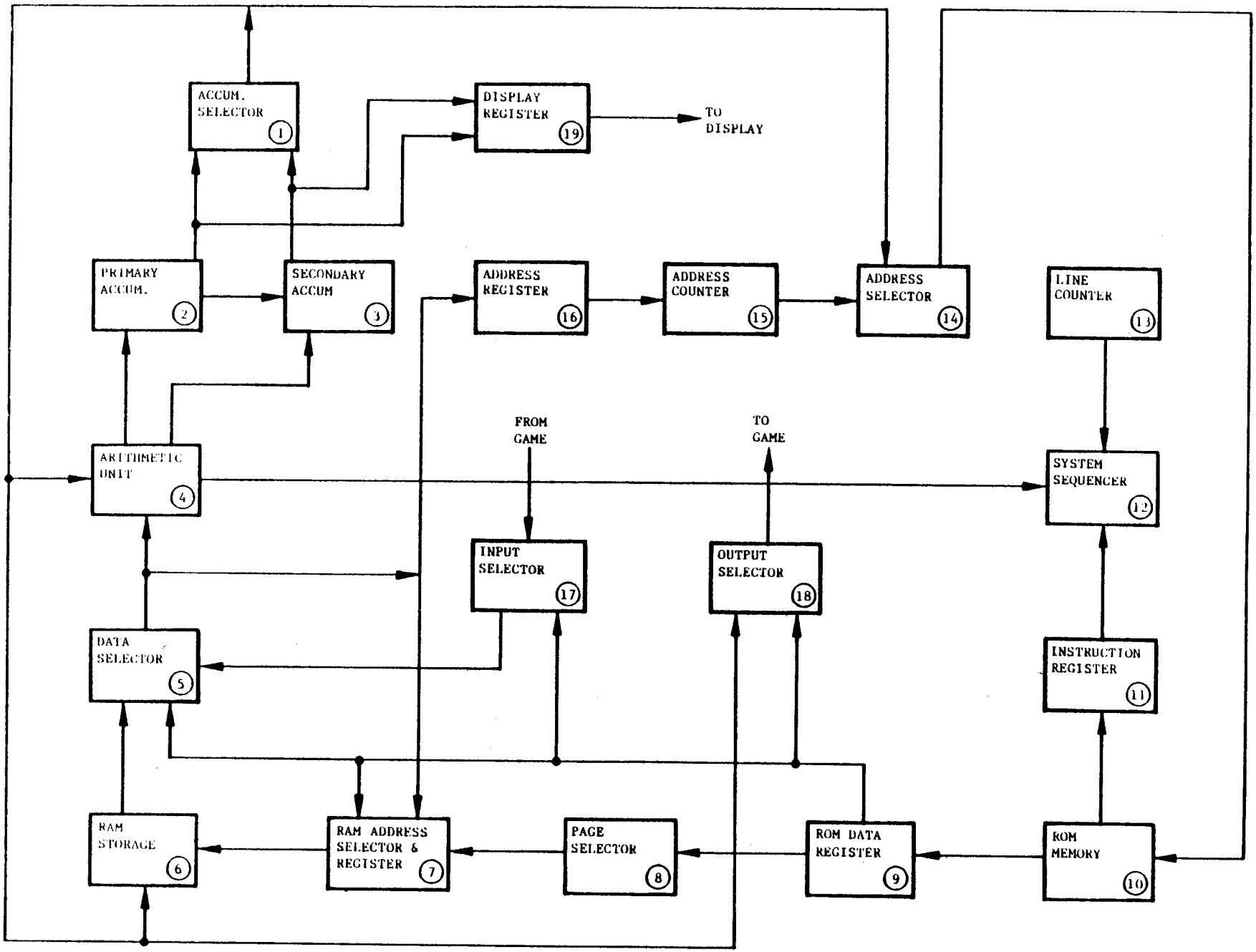

FIGURE 6-2. DETAILED BLOCK DIAGRAM

SECTION 7

TROUBLESHOOTING

UNIVERSAL BENCH TEST

CONFIGURATION:

The components depicted in Figure A represent the integral elements and interconnects necessary to effectively bench test the Cinematronics' color vector display video game system. The configuration is universal in that the game logic board, monitor, interface board and power supply are consistent from game to game. Audio board varies in design for each new game though maintaining the pinout of its input power molex plug. Player control ribbon cable terminates at the player control panel elements of each game (i.e., Joystick, Fire & Thrust buttons, Coin Acceptor Mechanism, etc.).

POWER INTERCONNECTS:

The power supply provides all voltages necessary for game operation.

Logic board drive is +5 volts $\pm$5% applied to pin 10 of the input power molex plug, and ground enters the logic board through pin 4 to pins 1, 5 and 6. The logic board will free run in the game attract mode with proper power applied.

The audio board accepts +25 volts on pin 4 and -25 volts applied through pin 6 to pin 8. Ground enters pin 7 and is trace connected to speaker return pin 5. Pin 9 accepts $\pm$5 volts DC.

Power for the monitor is +25 volts through pin 6 of its molex plug to pin 5 and -25 volts on pin 8. A full wave rectified, unfiltered spot kill level of approximately +25 volts is applied to pin 14. The assembly is grounded through pin 15 to pin 12.

SYSTEM TEST CONSIDERATIONS:

As previously mentioned, the logic board will free run in the particular game attract mode solely with +5 volt applied. Ribbon cables are output lines and can be removed without affecting the free-run mode. Ribbon cable is an input

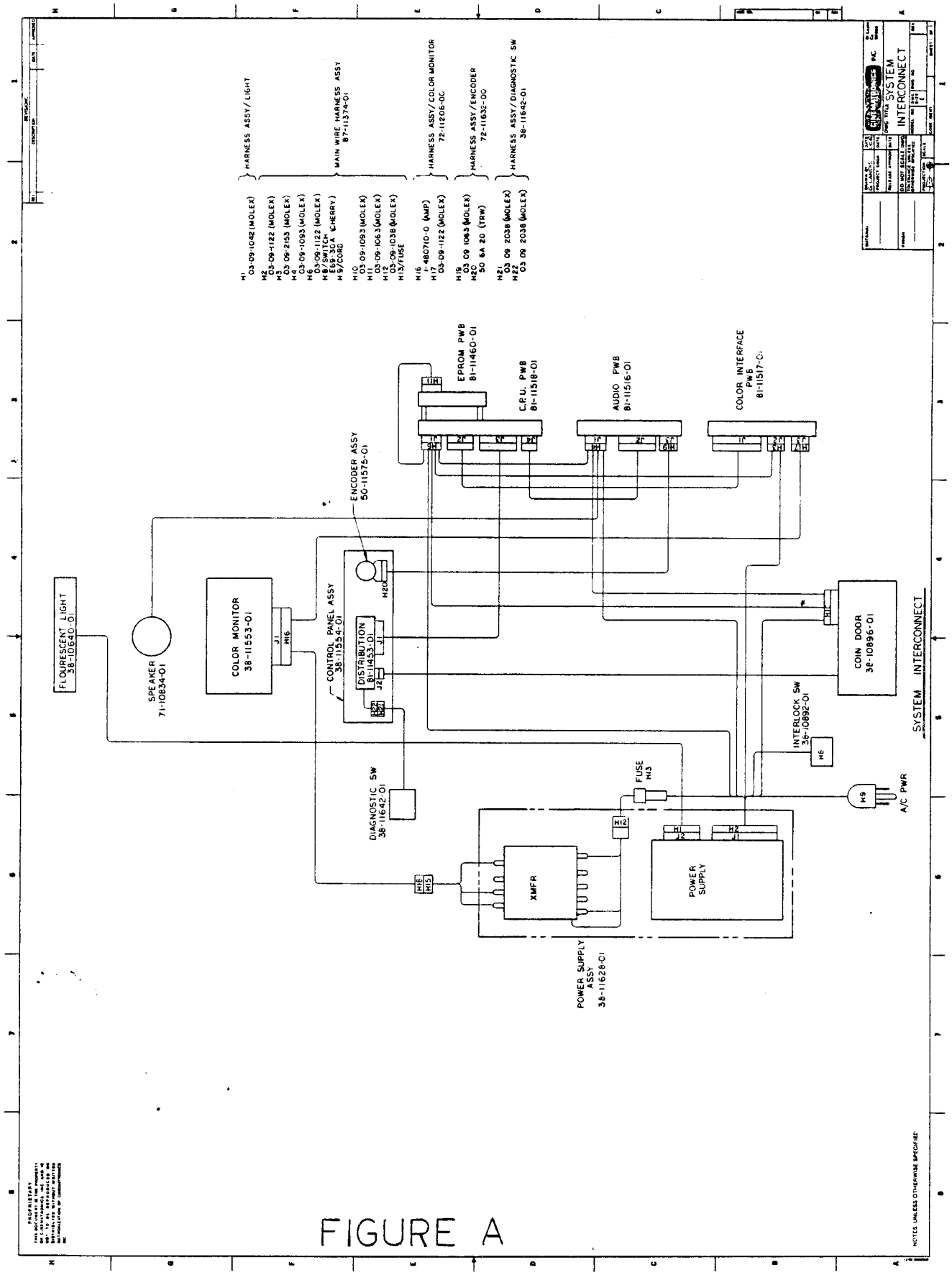
SYSTEM INTERCONNECT
FLOURESCENT LIGHT 38-10640-01
SPEAKER 71-10834-01
COLOR MONITOR 38-11553-01
CONTROL PANEL ASSY 38-11554-01
DISTRIBUTION 81-11453-01
ENCODER ASSY 5G-11575-01
EPROM PWB 81-11460-01
C.P.U. PWB 81-11518-01
AUDIO PWB 81-11516-01
COLOR INTERFACE PWB 81-11517-01
COIN DOOR 38-10896-01
INTERLOCK SW 36-10892-01
DIAGNOSTIC SW 38-11642-01
FUSE H13
A/C PWR
XMFR
POWER SUPPLY
POWER SUPPLY ASSY 36-11628-01
H1 03-09-1042 (MOLEX) } HARNESS ASSY/LIGHT
H2 03-09-1122 (MOLEX)
H3 03-09-2153 (MOLEX)
H4 03-09-1093 (MOLEX)
H6 03-09-1122 (MOLEX)
H8 SWITCH (CHERRY E69-30A) } MAIN WIRE HARNESS ASSY 87-11374-01
H9 CORD
H10 03-09-1093 (MOLEX)
H11 03-09-1063 (MOLEX)
H12 03-09-1038 (MOLEX)
H13 FUSE
H16 1-480710-0 (AMP) } HARNESS ASSY/COLOR MONITOR 72-11206-00
H17 03-09-1122 (MOLEX)
H19 03 09 1063 (MOLEX)
H20 50 6A 20 (TRW) } HARNESS ASSY/ENCODER 72-11632-00
H21 03 09 2038 (MOLEX)
H22 03 09 2038 (MOLEX) } HARNESS ASSY/DIAGNOSTIC SW 38-11642-01
PROPRIETARY
NOTES: UNLESS OTHERWISE SPECIFIED:

FIGURE A

line and can also be removed for test purposes while free running.

The audio board can be effectively diagnosed with proper power applied and a speaker. The logic board generates most sounds by grounding various control lines through ribbon cable. The cable can be removed and game sounds can be generated by tying these lines low temporarily with a jumper wire. Refer to the appropriate audio board schematic and theory of operation section.

The color interface board must be connected to a working CPU board so it can produce proper output signals to the Wells-Gardner color monitor. If improper data were coming from the interface board to the Wells-Gardner monitor, fuses F600 or F700 could be blown. These are located on the deflection circuit board of the monitor.

TEST EQUIPMENT:

For most test purposes, a wideband oscilloscope and a digital or analog multi-meter is adequate. Also, a tri-level logic probe for verifying the presence of digital information is recommended.

Testing and troubleshooting of the logic board is the least straightforward aspect of bench test. However, Cinematronics has developed a logic board exerciser to be used in conjunction with a signature analyzer that allows effective troubleshooting and repair with a minimum knowledge of microprocessor theory and operation. The exerciser puts a 4 bit alphanumeric code on each IC leg of each chip on the CPU board which then can be probed and read with the signature analyzer to verify proper operation. Contact the Customer Service Department at Cinematronics for details.

TEST PROCEDURES:

The first step in effective bench testing is to review the system theory of operation included in the manual. Discussed are principles from the mathematical concept of vector systems to the actual hardware techniques employed in generating a vector video game display.

For specific troubleshooting procedures, refer to the symptom-remedy diagnostic chart included in the manual.

TABLE 7-1. TROUBLESHOOTING GUIDE

PROBLEM	PROBABLE SOLUTIONS
No Picture	Listen for audible "clatter" from the deflection yoke on the CRT neck. If the clatter is present, deflection circuitry is working and the problem is in one of the intensity circuits.
	No high voltage.
	If game audio is present, the CPU board is functional and the problem is in the monitor or the interface board. If the audio is distorted or absent, the CPU board is suspect. If CPU board is equipped with red led near the input power plug, verify that it flashes once when power is applied and remains off thereafter. If no LED, verify that C8 pin 6 is constantly low with a voltmeter.
	Check the neck of the CRT for a glowing filament.
	Be sure all connections to the CPU board and monitor are firmly seated.
	If there is no filament voltage, check the line fuse from the monitor power transformer.
	Check fuses F600 and F700 on monitor deflection board. Check fuses F100 and F101 on monitor deflection board.
	Check H3-14 of main harness connector for a full wave rectified, unfiltered voltage signal floating at +25 volts.
	An accurate high voltage meter will read close to 20 KV on CRT Anode if high voltage is good. Self-contained HV meters vary widely in accuracy.
	Check cathode voltages: Should be 150 volts. Screen voltage should be around 400 to 550 volts. Check for proper +25 and -25 volts DC.

PROBLEM	PROBABLE SOLUTIONS
Picture on Display Jitters	Replace analog switch (LF13331) on interface board.
	Check horizontal and vertical size pots for wiper noise by turning briskly while observing the screen. Readjust for proper screen size.
	Check for bad solder connections on horizontal and vertical size pots.
	Check DAC 80's on the interface board for bad solder connections.
	Ensure that all molex connectors are properly seated.
No Audio	Check for open speaker coil.
	Check transistors 2N6292 and 2N6107 and nearby output components on audio board with ohmeter or transistor checker.
	Check 7815 and 7915 outputs.
	Check for open wiper on volume control mounted on inside of coin door.
	Refer to audio board theory of operation and troubleshooting guide.
	Replace F2 on logic board
Coin Counter is Inoperative	Check 2N6292 transistor on logic board with ohmeter or transistor tester. Verify proper operation of A4 by grounding A4 pin 1. Coin counter should click.
	Disconnect coin counter molex connector. Measure DC voltage on red wire. Meter should read +25 volts DC.

PROBLEM	PROBABLE SOLUTIONS
Gives No Credits	Tie E4 pin 12 to ground. If credits fail to appear, replace E4. If credits appear, disconnect logic board ribbon connector J3. Measure +5 volts on A4 pins 1 and 5. If missing, replace pull up resistor pack C2. Alternately ground A4 pins 1 and 5. If credits appear, problem is in switches on coin door. Verify proper coin door micro-switch operation. Reconnect J3. Observe A4 pins 3 and 6 alternately while depressing microswitch lever on coin mechanism. Pins 3 and 6 should change states. Replace A4. Replace F2 (74LS259) on logic board.

SECTION 8

SUGGESTED PARTS
FOR STOCK

COLOR INTERFACE

LF 1331	-	Analog Switch
7406	-	IC Inverter
2N5550	-	NPN Transistor 140 Volt BVCEO
7315	-	+15 Volt Regulator IC
7915	-	-15 Volt Regulator IC
MC 1495	-	Multiplier
LM 318	-	Hi-Speed OP-Amp
7414	-	Schmidt Trigger Inverter

CPU

74LS259/DM8334	-	IC 8 Bit Latch
74LS32	-	IC or Gate
D ROM 1	-	IC PROM
20101 A2	-	IC RAM 256 x 4
Masked ROMS	-	Set of Four Contain Game Program
D ROMS (1-6)	-	Custom Made for CPU
25LS181	-	ALU

AUDIO

2N6107	-	PNP Output Transistor
2N6292	-	NPN Output Transistor
TL081/LF351	-	IC Op-AMP
CA3080	-	IC Transconduct
74LS377	-	IC Octal D Flip-Flop (Also Used in CPU)
2688	-	Noise Generator Chip
74LS191	-	Up/Down Converter
74LS151	-	Dual 8 Line to 4 Line Multiplexer

MONITOR

DAC-80	-	Digital to Analog Converter

SECTION 9

BOXING BUGS
PARTS LIST

ITEM NO.	CINEMATRONICS PART NUMBER	DESCRIPTION	QTY.
	87-11374-02	Assy, Harness, Main Wire	
1	25-10561-01	Nut, Wire	
2	34-10608-01	Wire, 18AWG, Red	
3	34-10609-01	Wire, 18AWG, Blue	
4	34-10610-01	Wire, 18AWG, Black	
5	34-10906-01	Wire, 22AWG, Twisted, Brown/ White	
6	34-10908-01	Wire, 18AWG, Orange	
7	34-11184-01	Wire, Stripe, 18AWG, Blk/ White	
8	34-11185-01	Wire, Stripe, 18AWG, Blk/ Yellow	
9	34-11187-01	Wire, Stripe, 18AWG, Red/ Black	
10	34-11271-01	Wire, 18AWG, Twtd, Blk/White	
11	34-11273-01	Wire, 18AWG, Green	
12	34-11407-01	Wire, 18AWG, Yellow	
13	34-11408-01	Wire, 18AWG, Grey	
14	34-11409-01	Wire, 18AWG, Striped, Wht/ Green	
15	34-11410-01	Wire, 18AWG, Violet	
16	34-11411-01	Wire, 18AWG, Striped, Wht/ Blue	
17	34-11412-01	Wire, 18AWG, Brown	
18	34-11413-01	Wire, 18AWG, Striped, Blue/ Yellow	
19	35-10614-01	Pin, Male, Molex	31
20	35-10615-01	Pin, Female, Molex	27
21	35-10617-01	Terminal, Female, Quick Disconnect	2
22	25-10580-01	Ty Rap, W/Eyelet	9
23	41-10647-01	Conn, 12 Cir, Molex	2
24	41-10648-01	Conn, 15 Cir, Molex	1
25	41-10649-01	Conn, 9 Cir, Molex	2
26	41-10658-01	Conn, 4 Cir, Molex	1
27	87-10984-01	Cord, Power, W/3 Prong Plug	1

ITEM NO.	CINEMATRONICS PART NUMBER	DESCRIPTION	QTY.
28	25-11571-01	Holder, Inline Fuse	1
29	34-10907-01	Wire, 18 AWG, White	
30	67-11580-01	Fuse, 5AMP Slow Blow	1
31	41-10657-01	Conn, 6 Cir, Molex	1
32	41-10883-01	Conn, 3 Cir, Molex	1
	87-11555-01	Assy, Harness, CRT Power, Slow Monitor	
1	34-11635-01	Wire, Twisted, 18AWG, Red/ Blk.	
2	34-11636-01	Wire, Twisted, 18AWG, Yel/ Blk.	
3	34-11637-01	Wire, Twisted, 18AWG, Or/Blk	
4	34-11638-01	Wire, Twisted, 18AWG, Blu/Blk	
5	34-11639-01	Wire, Twisted, 18AWG, Grn/Blk	
6	34-11640-01	Wire, Twisted, 18AWG, Vio/ Vio/Blk	
7	35-10614-01	Pin, Male, Molex	3
8	35-10615-01	Pin, Female, Molex	10
9	35-11604-01	Pin, Female, AMP, 350550-1	13
10	41-10647-01	Conn, 12 Cir, Molex	1
11	41-10954-01	Conn, 6 Cir, Molex	1
12	41-11603-01	Conn, AMP, 15 Cir 1-480710-0	1
13	25-10580-01	Ty Rap, W/Eyelet	3
	87-11161-02	Assy, Harness, Coin Door	
1	25-10579-01	Ty Rap, W/O Eyelet	4
2	25-10905-01	Clamp, Cable 3/16", Plastic	4
3	34-10597-01	Wire, 22AWG, Blk	
4	34-10599-01	Wire, 22AWG, Yellow	
5	34-10600-01	Wire, 22AWG, Purple	
6	34-10602-01	Wire, 22AWG, Orange	
7	34-10603-01	Wire, 22AWG, Grey	
8	34-10906-01	Wire, 22AWG, Twisted, Brown/ White	
9	35-10614-01	Pin, Male, Molex	2
10	35-10880-01	Terminal, Crimp, Female, Molex	1

ITEM NO.	CINEMATRONICS PART NUMBER	DESCRIPTION	QTY.
11	41-10650-01	Conn, 3 Cir, Molex	1
	87-11632-01	Assy, Harness, Encoder	
1	25-10579-01	Ty Rap, W/O Eyelet	12
2	34-10597-01	Wire, 22AWG, Blk	
4	34-10599-01	Wire, 22AWG, Yellow	
5	34-10606-01	Wire, 22AWG, Red	
6	34-10607-01	Wire, 22AWG, White	
7	35-10614-01	Pin, Male, Molex	1
8	35-10615-01	Pin, Female, Molex	3
9	41-10657-01	Conn, 6 Cir, Molex	1
10	41-11579-01	Conn, Chinch 6 Cir, 50-6A-20	1
11	41-11641-01	Conn, Key	1
	87-11633-01	Assy, Harness, Control Panel	
1	25-10579-01	Ty Rap, W/O Eyelet	5
2	34-10597-01	Wire, 22AWG, Blk	
3	34-10598-01	Wire, 22AWG, Green	
4	34-10599-01	Wire, 22AWG, Yellow	
5	34-10600-01	Wire, 22AWG, Purple	
6	34-10602-01	Wire, 22AWG, Orange	
7	34-10604-01	Wire, 22AWG, Brown	
8	34-10605-01	Wire, 22AWG, Blue	
9	34-10608-01	Wire, 18AWG, Red	
10	35-10614-01	Pin, Male, Molex	2
11	41-10883-01	Conn, 3 Cir, Molex	1

ITEM NO.	CINEMATRONICS PART NUMBER	DESCRIPTION	QTY.
	38-11554-01	Assy, Control Panel	
1	20-11459-01	Control Panel	1
2	22-11630-01	Decal, Ctl Panel, Lexan	1
3	25-10558-01	Nut, Hex, #10-24	4
4	25-10559-01	Nut, Pal 5/8"	6
5	25-10572-01	Washer, Lock, #10 Internal	4
6	25-10909-01	Bolt, Carriage, 3/16" x 3/4" Blk. OX	4
7	26-11570-01	Knob, Ctl Panel, B.B.	1
8	34-10596-01	Wire, 22AWG/TC, Buss	
9	37-11192-01	Button, Short, White, Cocktail	4
10	37-11192-02	Button, Short, Red	2
11	37-11373-01	Switch, W/Plastic Mntg. Brkt, Shor	6
12	50-11575-01	Encoder, Shaft, PC66D-250-5	1
13	25-10563-01	Screw, Machine, #6-32 x 1/2" Pan. HD. P.	2
14	41-10646-01	Conn, 3 Cir, Molex	1
15	80-10840-01	Brd, Distribution, Ctl. Pnl	1
16	87-10846-01	R. Cbl, 26 Cir, W/1 Female Conn. 36"	1
17	25-10579-01	Ty Rap, W/O Eyelet	12
18	25-10582-01	Tubing, Shrink, 3/16" Roll Stk, Bl	
19	34-10597-01	Wire, 22AWG, Blk	
20	34-10599-01	Wire, 22AWG, Yellow	
21	34-10606-01	Wire, 22AWG, Red	
22	34-10607-01	Wire, 22AWG, White	
23	35-10614-01	Pin, Male, Molex	1
24	35-10615-01	Pin, Female, Molex	3
25	41-10657-01	Conn, 6 Cir, Molex	1
26	41-11579-01	Conn, Chinch 6 Cir, 50-6A-20	1
27	41-11641-01	conn, Key	1
28	25-10579-01	Ty Rap, W/O Eyelet	5
29	34-10597-01	Wire, 22AWG, Blk	
30	34-10598-01	Wire, 22AWG, Green	
31	34-10599-01	Wire, 22AWG, Yellow	

ITEM NO.	CINEMATRONICS PART NUMBER	DESCRIPTION	QTY.
32	34-10600-01	Wire, 22AWG, Purple	
33	34-10602-01	Wire, 22AWG, Orange	
34	34-10604-01	Wire, 22AWG, Brown	
35	34-10605-01	Wire, 22AWG, Blue	
36	34-10608-01	Wire, 18AWG, Red	
37	35-10614-01	Pin, Male, Molex	2
38	41-10883-01	Conn, 3 Cir, Molex	1
	38-10896-01	Assy, Coin Door, W/Lamp	
1	20-10896-11	Coin Door W/Lamps	1
2	22-10899-01	Decal, "Cinematronics"	1
3	25-10556-01	Nut, Hex #4-40	3
4	25-10570-01	Washer, Lock, #4 Internal	3
5	20-10868-11	Brkt, Short Vol. Cntl/Counter	1
6	25-10557-01	Nut, Hex, #6-32	2
7	25-10563-01	Screw, Machine, #6-32 x 1/2" Pan. Hd. P.	2
8	25-10571-01	Washer, Lock, #6 Internal	2
9	29-10590-01	Meter, Coin	1
10	35-10615-01	Pin, Female, Molex	2
11	65-10812-01	Diode, 1N4003, Encpl	1
12	26-10589-01	Knob, Volume	1
13	34-11013-01	Wire, 22AWG, Twtd, Blue/Red/ Green	
14	35-10614-01	Pin, Male, Molex	1
15	35-10615-01	Pin, Female, Molex	2
16	41-10885-01	Conn, 9 Cir, Molex	1
17	51-10722-01	Pot, W.Lk.Wsr/Nut, 10K Ohm	1
18	25-10579-01	Ty Rap, W/O Eyelet	4
19	25-10905-01	Clamp, Cable 3/16", Plastic	4
20	34-10597-01	Wire, 22AWG, Blk	
21	34-10599-01	Wire, 22AWG, Yellow	
22	34-10600-01	Wire, 22AWG, Purple	
23	34-10602-01	Wire, 22AWG, Orange	
24	34-10603-01	Wire, 22AWG, Grey	
25	34-10906-01	Wire, 22AWG, Twisted, Brown/ White	

ITEM NO.	CINEMATRONICS PART NUMBER	DESCRIPTION	QTY.
26	35-10614-01	Pin, Male, Molex	2
27	35-10880-01	Terminal, Crimp, Female, Molex	1
28	41-10650-01	Conn, 3 Cir, Molex	1
	38-10891-02	Assy, Coin Meter/Vol Cntl	
1	20-10868-01	Brkt, Short Vol. Cntl/Counter	1
2	25-10557-01	Nut, Hex, #6-32	2
3	25-10563-01	Screw, Machine, #6-32 x 1/2" Pan. Hd. P.	2
4	25-10571-01	Washer, Lock, #6 Internal	2
5	29-10590-01	Meter, Coin	1
6	35-10615-01	Pin, Female, Molex	2
7	65-10812-01	Diode, 1N4003, Encpl	1
8	34-11013-01	Wire, 22AWG, Twtd, Blue/Red/ Green	
9	35-10614-01	Pin, Male, Molex	1
10	35-10615-01	Pin, Female, Molex	2
11	41-10885-01	Conn, 9 Cir, Molex	1
12	51-10722-01	Pot, W.Lk.Wsr/Nut, 10K Ohm	1
	38-11628-01	Assy, Plate, P/S & Transformer	
1	20-11606-01	Plate, Mtg, P/S, Transformer	1
2	25-10558-01	Nut, Hex, #10-24	8
3	25-10568-01	Washer, Flat, #10 x 1/2"	8
4	25-10909-01	Bolt, Carriage, 3/16" x 3/4", Blk, OX	4
5	25-11392-01	Bolt, Carriage, 3/16" x 1 1/4" Blk	4
6	43-11552-01	Transformer, Color Monitor, Low Sp	1
7	82-10842-20	Power Supply, Condor	1
	38-11642-01	Assy, Diagnostic Switch	
1	25-10580-01	Ty Rap, W/Eyelet	3
2	34-10597-01	Wire, 22AWG, Blk	
3	34-10600-01	Wire, 22AWG, Purple	
4	35-10615-01	Pin, Female, Molex	2

ITEM NO.	CINEMATRONICS PART NUMBER	DESCRIPTION	QTY.
5	41-10659-01	Conn, 3 Cir, Molex	1
6	20-10863-01	Brkt, Interlock Switch, SC	1
7	37-10893-01	Switch, Interlock	1
	38-10894-01	Assembly, Coin Drawer	
1	20-10862-01	Brkt, Coin Box Tong, SC	1
2	20-10864-01	Handle, Coin Box, SC	1
3	20-10871-01	Coin Box, SC	1
4	20-10872-01	Cover, Coin Box, SC	1
	38-10638-01	Assembly, Speaker	
1	20-11382-01	Grill, Speaker	1
2	71-10834-01	Speaker	1
	38-10892-01	Assembly, Interlock Swt, Back Panel	
1	20-10863-01	Brkt, Interlock Switch, SC	1
2	37-10893-01	Switch, Interlock	1
	38-10640-01	Assembly, Fluorescent Lamp	
1	01-10505-01	Lamp, Fluorescent	1
2	26-10588-01	Fixture, Lamp, Fluorescent	1

ITEM NO.	CINEMATRONICS PART NUMBER	DESCRIPTION	QTY.
	81-11453-01	Assy, Board, Distribution	
1	25-10563-01	Screw, Machine, #6-32x1/2" Pan Hd. P	2
2	41-10646-01	Conn, 3 Cir, Molex	1
3	80-10840-01	Brd, Distribution, Ctl Pnl	1
4	87-10846-04	R. Cbl, 26 Cir, w/female Conn. 36"	1
	81-11460-01	Assy, Board, 32K Rom	
1	36-10620-01	Socket, 16 Pin, I.C., Dip Solder Ta	1
2	36-10621-01	Socket, 24 Pin, I.C., Dip Solder Ta	10
3	41-10661-01	Conn, 6 Cir, Molex	1
4	44-10698-01	IC, 74600	1
5	63-10784-01	Cap,. 1 MF Disc 20%	9
6	63-10944-01	Cap, 100 MF 35V Electrolytic Radia	1
7	80-11460-01	Brd, 32K Rom	1
8	38-11569-01	Assy, Board 32K Rom	
9	81-11460-01	Assy, Brd, 32K Rom	1
10	36-10620-01	Socket, 16 Pin, I.C., Dip Solderta	1
11	36-10621-01	Socket, 24 Pin, I.C., Dip Solderta	10
12	41-10661-01	Conn, 6 Cir, Molex	1
13	44-10698-01	IC, 74SOO	1
14	63-10784-01	Cap,. 1MF 50V Disc 20%	9
15	63-10944-01	Cap, 100MF 35V Electrolytic Radia	1
16	80-11460-01	Brd, 32K Rom	1
17	05-11507-01	Assy, E Prom Kit, B.B.	1
18	02-11507-01	E Prom, U1B, B.B.	1
19	02-11507-02	E Prom, U2B, B.B.	1
20	02-11507-03	E Prom, U3B, B.B.	1

ITEM NO.	CINEMATRONICS PART NUMBER	DESCRIPTION	QTY.
21	02-11507-04	E Prom, U4B, B.B.	1
22	02-11507-05	E Prom, U1A, B.B.	1
23	02-11507-06	E Prom, U2A, B.B.	1
24	02-11507-07	E Prom, U3A, B.B.	1
25	02-11507-08	E Prom, U4A, B.B.	1
26	87-11573-01	Assy, R, Cable, 16Cir, 8.5" 32K Rom	1
27	41-11576-01	Conn, 16 Cir Dip, IDP-163	2
28	87-10847-02	R. Cbl. Flat 16 Cir.	
29	87-11574-01	Assy, R. Cable, 24 Cir, 10" 32K Rom	2
30	41-11577-01	Conn, 24 Cir Dip, IDP-246	4
31	87-11578-01	Ribbon Cable, Flat 24 Cir	
	81-11142-02	Assy, Board, Logic w 32K Mod	
1	01-10500-01	Tubing, Teflon 22AWG Thin	
2	35-10616-01	Points, Test K27C	6
3	35-10965-01	Jumper, 16 Pin, Dip	2
4	36-10619-01	Socket, 14 Pin, I.C., Dip Solderta	2
5	36-10620-01	Socket, 16 Pin, I.C., Dip Solderta	5
6	36-10621-01	Socket, 24 Pin, I.C., Dip Solderta	7
7	37-10625-01	Switch, Dip, 7 Pole	1
9	41-10652-01	Conn, 16 Cir, Male Header	1
10	41-10653-01	Conn, 26 Cir, Male Header	1
11	41-10654-01	Conn, 34 Cir, Male Header	1
12	41-10655-01	Conn, 12 Cir, Molex	1
13	44-10667-01	IC, 2101A2	3
14	44-10671-01	IC, 7425	1
15	44-10675-01	IC, 74265	1
16	44-10676-01	IC, 25LS181	3
17	44-10677-01	IC, 74LS00	4
18	44-10678-01	IC, 74LS02	4
19	44-10679-01	IC, 74LS04	3

ITEM NO.	CINEMATRONICS PART NUMBER	DESCRIPTION	QTY.
20	44-10680-01	IC, 74LS08	1
21	44-10681-01	IC, 74LS10	3
22	44-10682-01	IC, 74LS27	3
23	44-10683-01	IC, 74LS32	4
24	44-10684-01	IC, 74LS75	2
25	44-10685-01	IC, 74LS85	3
26	44-10686-01	IC, 74LS86	1
27	44-10687-01	IC, 74LS107	7
28	44-10688-01	IC, 74LS151	4
29	44-10689-01	IC, 74LS157	8
30	44-10690-01	IC, 74LS163	9
31	44-10691-01	IC, 74LS164	1
32	44-10692-01	IC, 74LS194	9
33	44-10693-01	IC, 74LS257	3
34	44-10694-01	IC, 74LS259	1
35	44-10695-01	IC, 74LS298	2
36	44-10696-01	IC, 74LS377	6
37	44-10697-01	IC, 74LS393	2
38	44-10698-01	IC, 74S00	2
39	44-10699-01	IC, 74S02	1
40	44-10700-01	IC, 74S04	2
41	44-10701-01	IC, 74S08	1
42	44-10702-01	IC, 74S10	1
43	44-10703-01	IC, 74S32	2
44	44-10704-01	IC, 74S113	2
45	44-10705-01	IC, 74S158	1
46	44-10706-01	IC, 74S182	1
47	44-10707-01	IC, 74S287, DROM-1	1
48	44-10708-01	IC, 74S288, DROM-2	1
49	44-10709-01	IC, 74S288, DROM-3	1
50	44-10710-01	IC, 74S288, DROM-4	1
51	44-10711-01	IC, 74S288, DROM-5	1

ITEM NO.	CINEMATRONICS PART NUMBER	DESCRIPTION	QTY.
52	44-10712-01	IC, 74S288, DROM-6	1
53	53-10726-01	Res, 100 OHM 1/4W 5% C.	1
54	53-10731-01	Res, 330 OHM 1/4W 5% C.	2
55	53-10732-01	Res, 470 OHM 1/4W 5% C.	1
56	53-10734-01	Res, 1K OHM 1/4W 5% C.	12
57	53-10738-01	Res, 2.2K OHM 1/4W 5% C.	1
58	53-10746-01	Res, 10K OHM 1/4W 5% C.	2
59	53-10753-01	Res, 30K OHM 1/4W 5% C.	1
60	53-10762-01	Res, 560K OHM 1/4W 5% C.	1
61	53-10779-01	Res, 1K OHM 16Cir Dip Pack	2
62	63-10783-01	Cap,. 02MF 50V Disc 20%	58
63	63-10785-01	Cap, 680PF 100V Disc 20%	1
64	63-10808-01	Cap, 3.3MF 35V Dip Tantalum 10%	1
65	65-10811-01	Diode, Signal 1N914B	2
66	63-10810-01	Cap, 22MF 35V Dip Tantalum 10%	2
67	65-10814-01	Led, Til 220	1
68	66-10816-01	Transistor, NPN 2N3904	2
69	66-10825-01	Transistor, NPN 2N6292	1
70	69-10833-01	Crystal, 20 MHZ	1
71	80-10837-01	Brd, Logic	1
72	34-10594-01	Wire, 30 AWG, Blue, Kynar	

APPENDIX A

Assembly Drawings
Schematics
and
Wiring Diagrams

APPENDIX A

TABLE OF CONTENTS

ASSEMBLY DRAWINGS
SCHEMATICS
AND
WIRING DRAWINGS

A1 - TOP ASSEMBLY, BOXING BUGS
A2 - SYSTEM INTERCONNECT DRAWING
A3 - WIRE LIST, COLOR UPRIGHT
A4 - POWER SUPPLY AND TRANSFORMER MOUNTING PLATE ASSEMBLY
A5 - POWER SUPPLY PINOUT ILLUSTRATION
A6 - CONDOR POWER SUPPLY SCHEMATIC
A7 - NATIONAL POWER TECHNOLOGY POWER SUPPLY SCHEMATIC
A8 - CONTROL PANEL ASSEMBLY
A9 - CONTROL PANEL SCHEMATIC
A10 - C.P.U. BOARD ILLUSTRATION
A11 - C.P.U. BOARD MAJOR COMPONENT DRAWING
A12 - C.P.U. BOARD SCHEMATIC
A13 - C.P.U. BOARD SCHEMATIC
A14 - C.P.U. BOARD SCHEMATIC
A15 - C.P.U. BOARD SCHEMATIC
A16 - C.P.U. BOARD SCHEMATIC
A17 - C.P.U. BOARD SCHEMATIC
A18 - 32K MEMORY BOARD MAJOR COMPONENT DRAWING
A19 - 32K MEMORY BOARD SCHEMATIC
A20 - HEAT SINK ASSEMBLY
A21 - AUDIO BOARD SCHEMATIC
A22 - AUDIO BOARD SCHEMATIC
A23 - AUDIO BOARD SCHEMATIC
A24 - AUDIO BOARD SCHEMATIC
A25 - AUDIO BOARD SCHEMATIC
A26 - AUDIO BOARD SCHEMATIC

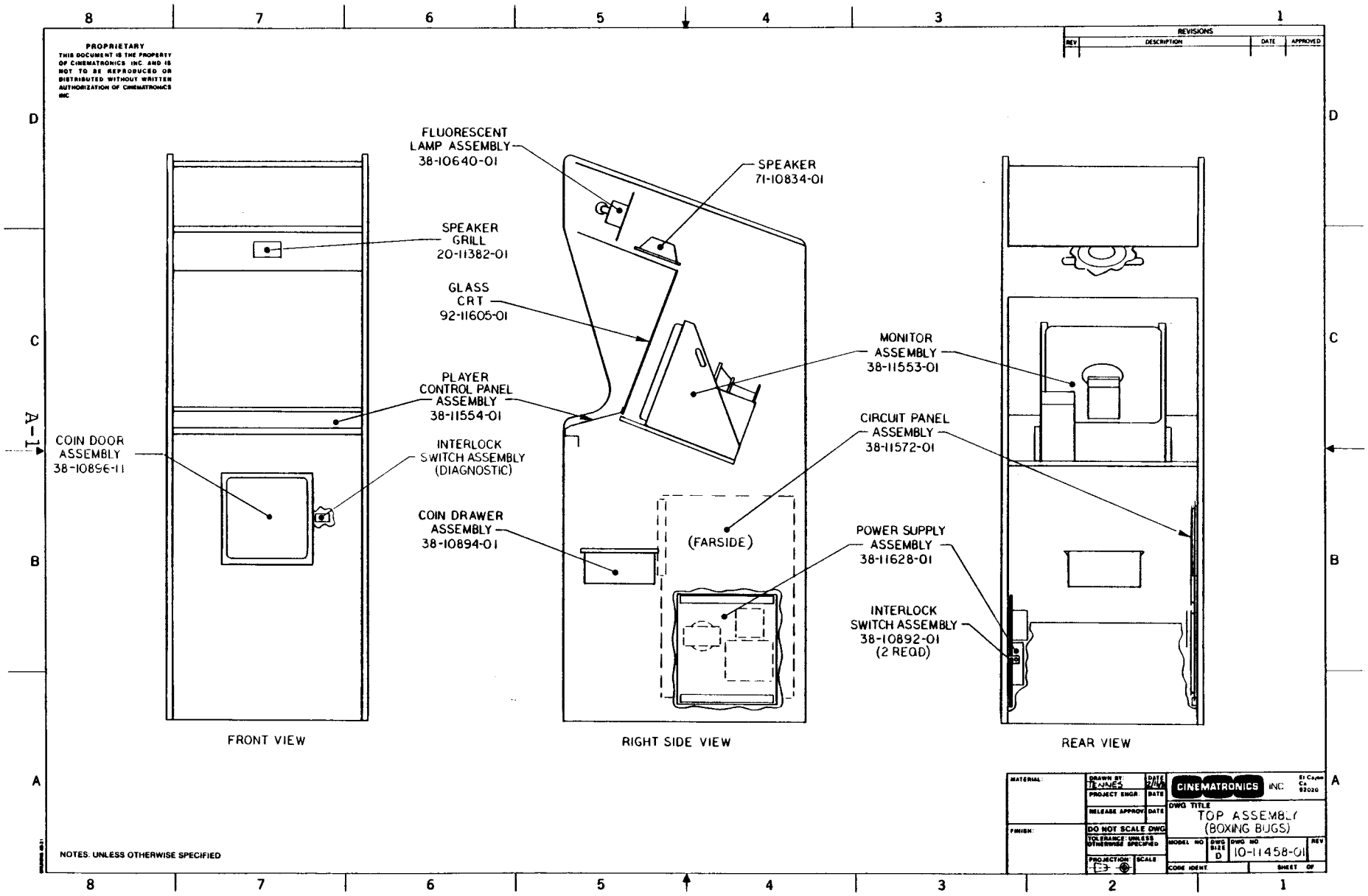
PROPRIETARY
THIS DOCUMENT IS THE PROPERTY OF CINEMATRONICS INC. AND IS NOT TO BE REPRODUCED OR DISTRIBUTED WITHOUT WRITTEN AUTHORIZATION OF CINEMATRONICS INC.
REVISIONS
REV
DESCRIPTION
DATE
APPROVED
FLUORESCENT LAMP ASSEMBLY 38-10640-01
SPEAKER 71-10834-01
SPEAKER GRILL 20-11382-01
GLASS CRT 92-11605-01
MONITOR ASSEMBLY 38-11553-01
PLAYER CONTROL PANEL ASSEMBLY 38-11554-01
CIRCUIT PANEL ASSEMBLY 38-11572-01
COIN DOOR ASSEMBLY 38-10896-11
INTERLOCK SWITCH ASSEMBLY (DIAGNOSTIC)
COIN DRAWER ASSEMBLY 38-10894-01
(FARSIDE)
POWER SUPPLY ASSEMBLY 38-11628-01
INTERLOCK SWITCH ASSEMBLY 38-10892-01 (2 REQD)
FRONT VIEW
RIGHT SIDE VIEW
REAR VIEW
NOTES: UNLESS OTHERWISE SPECIFIED
MATERIAL:
FINISH:
DRAWN BY: TENNES
PROJECT ENGR:
RELEASE APPROV:
DO NOT SCALE DWG
TOLERANCE: UNLESS OTHERWISE SPECIFIED
PROJECTION:
SCALE
CINEMATRONICS INC
El Cajon Ca 92020
DWG TITLE
TOP ASSEMBLY (BOXING BUGS)
MODEL NO
DWG SIZE D
DWG NO 10-11458-01
REV
CODE IDENT
SHEET OF

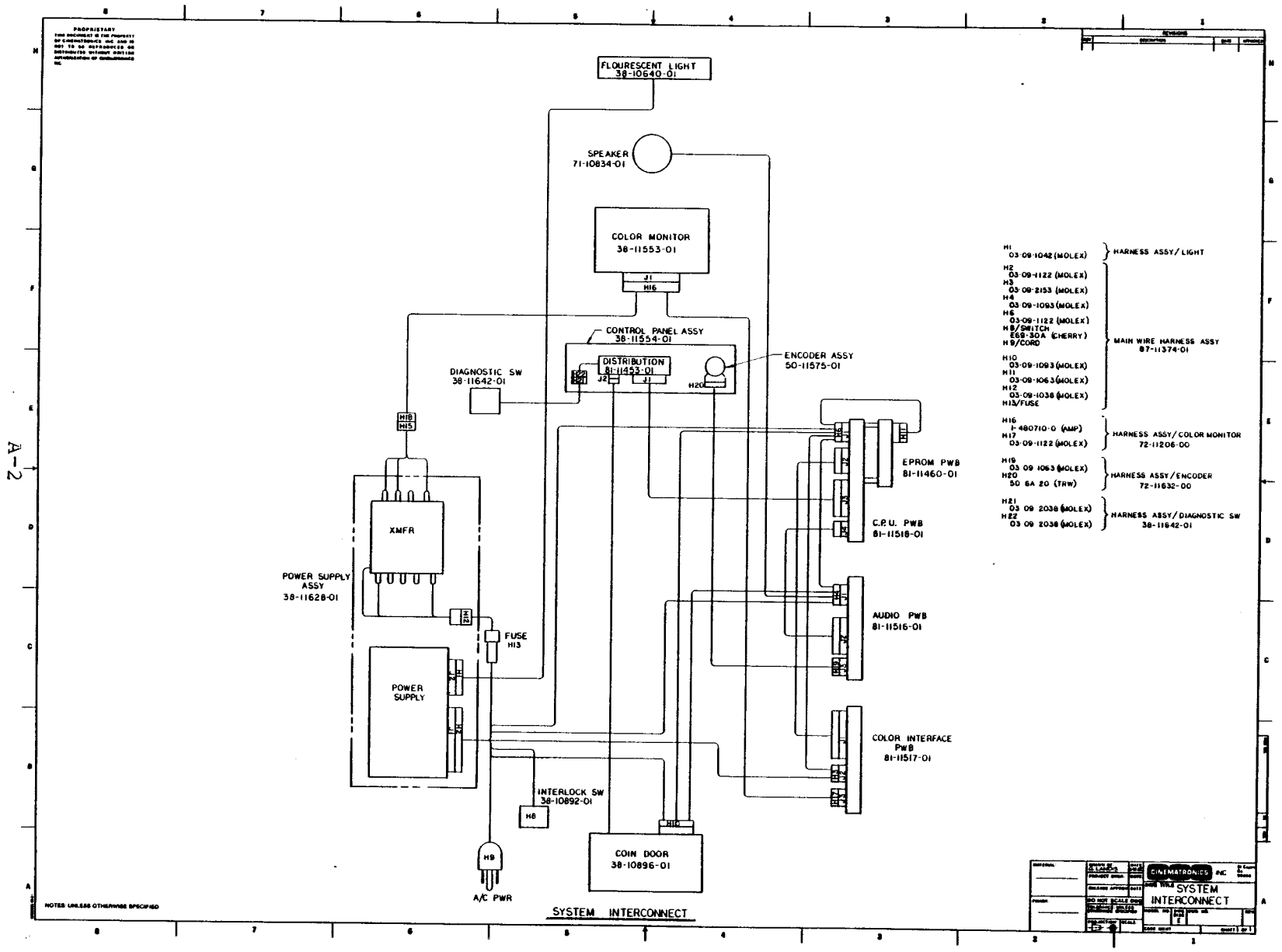
FLOURESCENT LIGHT
38-10640-01
SPEAKER
71-10834-01
COLOR MONITOR
38-11553-01
J1
H16
CONTROL PANEL ASSY
38-11554-01
DISTRIBUTION
81-11453-01
J2
J1
H20
ENCODER ASSY
50-11575-01
DIAGNOSTIC SW
38-11642-01
H18
H15
XMFR
POWER SUPPLY
ASSY
38-11628-01
FUSE
H13
POWER
SUPPLY
INTERLOCK SW
38-10892-01
H8
H9
A/C PWR
H10
COIN DOOR
38-10896-01
EPROM PWB
81-11460-01
C.P.U. PWB
81-11518-01
AUDIO PWB
81-11516-01
COLOR INTERFACE
PWB
81-11517-01
H1
03-09-1042 (MOLEX)
HARNESS ASSY/ LIGHT
H2
03-09-1122 (MOLEX)
H3
03-09-2153 (MOLEX)
H4
03-09-1093 (MOLEX)
H6
03-09-1122 (MOLEX)
H8/SWITCH
E69-30A (CHERRY)
H9/CORD
H10
03-09-1093 (MOLEX)
H11
03-09-1063 (MOLEX)
H12
03-09-1038 (MOLEX)
H13/FUSE
MAIN WIRE HARNESS ASSY
87-11374-01
H16
J-480710-0 (AMP)
H17
03-09-1122 (MOLEX)
HARNESS ASSY/COLOR MONITOR
72-11206-00
H19
03 09 1063 (MOLEX)
H20
50 6A 20 (TRW)
HARNESS ASSY/ENCODER
72-11632-00
H21
03 09 2038 (MOLEX)
H22
03 09 2038 (MOLEX)
HARNESS ASSY/DIAGNOSTIC SW
38-11642-01
PROPRIETARY
NOTES UNLESS OTHERWISE SPECIFIED
CINEMATRONICS INC
SYSTEM
INTERCONNECT
SYSTEM INTERCONNECT
A-2

PROPRIETARY
THIS DOCUMENT IS THE PROPERTY OF CINEMATRONICS, INC AND IS NOT TO BE REPRODUCED OR DISTRIBUTED WITHOUT WRITTEN AUTHORIZATION OF CINEMATRONICS INC

REVISIONS			
REV	DESCRIPTION	DATE	APPROVED
	ORIG. RELEASE ERN #	2-12-82	

CONNECTOR	FROM	TO	COLOR	AWG	PIN	LENGTH	REMARKS
H1 POWER SUPPLY NO EX 03-09-1042	H1-3	LAMP	BLACK	18	M	76 3/4"	TWIST PAIR
	H1-4	LAMP	WHITE	18	M		
POWER SUPPLY H2 VOLEX 03-09-1172	H2-1	H9 GRN	GREEN	18	M		EARTH
	H2-1	H12-2	GREEN	18	M	12"	
	H2-2	H9 WHT	WHITE	18	M		NEUTRAL
	H2-2	H12-3	WHITE	18	M	12"	
	H2-3	H6 N.O.	RED/BLK	18	M	21"	SWITCHED A.C
	H2-3	H3 BODY	RED	18	M	6"	
	H2-4	H10-7	BROWN	18	M	90"	TWIST PAIR
	H2-5	H10-8	WHITE	18	M		6.3 VAC
	H2-4	H3-1	BROWN	18	M	68 1/4"	TWIST PAIR
	H2-5	H3-7	WHITE	18	M		6.3 VAC
	H2-6	H3-14	YELLOW	18	M	68 1/4"	SPOT KILL
	H2-7	H3-6	RED	18	M	68 1/4"	+25
	H2-7	H4-4	GRAY	18	M	46"	+25
	H2-8	H3-8	BLUE	18	M	68 1/4"	-25
	H2-8	H4-6	BLUE	18	M	46"	-25
	H2-9	H3-13	ORANGE	18	M	68 1/4"	+5
	H2-9	H4-9	ORANGE	18	M	46"	+5
	H2-10	H6-10	ORANGE	18	M	99"	+5
	H2-11	H3-15	BLACK	18	M	68 1/4"	GND
	H2-11	H4-7	BLACK	18	M	46	GND
	H2-12	H6-4	BLK/WHT	18	M	99	GND

CONNECTOR	FROM	TO	COLOR	AWG.	PIN	LENGTH	REMARKS
INTERFACE H3 MOLEX 03-09-2153	H3-1	H2-4	BROWN	18	F		REF 6.3 VAC
	H3-2						NOT USED
	H3-3						NOT USED
	H3-4						NOT USED
	H3-5						NOT USED
	H3-6	H2-7	RED	18	F		REF +25
	H3-7	H2-5	WHITE	18	F		REF 6.3 VAC
	H3-8	H2-8	BLUE	18	F		REF -25
	H3-9						NOT USED
	H3-10						NOT USED
	H3-11						NOT USED
	H3-12	H6-5	BLK/YEL	18	F	41 3/4"	GND
	H3-13	H2-9	ORANGE	18	F		REF +5
	H3-14	H2-6	YELLOW	18	F		REF SPOT KILL
	H3-15	H2-11	BLACK	18	F		REF GND
AUDIO H4 MOLEX 03-09-1093	H4-1	H10-1	WHT/GRN	18	M	57"	VOLUME
	H4-2	SPEAKER	GREEN	18	F	85 3/4"	SEE NOTE 6
	H4-3	H10-5	RED	18	F	57"	VOLUME
	H4-4	H2-7	GRAY	18	F	40"	REF +25
	H4-4	H10-4	VIOLET	18	F	57"	
	H4-5	SPEAKER	BLACK	18	F	85 3/4"	SEE NOTE 6
	H4-6	H2-8	BLUE	18	F		REF -25
	H4-7	H2-11	BLACK	18	F		REF GND
	H4-7	H6-6	BLK	18	F	20 1/4"	
	H4-8	H10-6	WHT/BLU	18	F	57"	VOLUME
	H4-9	H2-9	ORANGE	18	F		REF +5
LOGIC H6 MOLEX 03-09-1122	H6-1						NOT USED
	H6-2						NOT USED
	H6-3	H10-3	BROWN	18	F	64"	METER
	H6-4	H2-12	BLK/WHT	18	M		REF GND
	H6-5	H3-12	BLK/YEL	18	F		REF GND
	H6-6	H11-1	BLK	18	F		GND
	H6-6	H4-7	BLK	18	F		GND
	H6-7						NOT USED
	H6-8						NOT USED
	H6-9						NOT USED
	H6-10	H2-10	ORANGE	18	F		REF +5
	H6-11	H11-6	ORANGE	18	F		NOT USED
	H6-12						NOT USED

CONNECTOR	FROM	TO	COLOR	AWG	PIN	LENGTH	REMARKS
INTERLOCK H8	H8 COM	H9 BLK	BLU/YEL	18	Q	15"	
	H8 N.O.	H2-3	RED/BLK	18	Q	15"	
A C LINE CORD H9	H9 GRN	H2-1		18	M		96" LONG W/PLUG
	H9 WHT	H2-2		18X3	M		
	H9 BLK	H8 COM		18	WN		
COIN DOOR H10 MOLEX 03-09-1093	H10-1	H4-1	WHT/GRN	18	F		3 WIRE TWIST
	H10-2						NOT USED
	H10-3	H6-3	BROWN	18	M		REF METER
	H10-4	H4-4	VIOLET	18	M		REF -25
	H10-5	H4-3	RED	18	M		3 WIRE TWIST
	H10-6	H4-8	WHT BLU	18	M		
	H10-7	H2-4	BROWN	18	F		REF 6.3 VAC
	H10-8	H2-5	WHITE	18	F		REF 6.3 VAC
	H10-9						NOT USED
32K EPROM H11 MOLEX 03-09-1063	H11-1	H6-6	BLK	18	F		REF GND
	H11-2						NOT USED
	H11-3						NOT USED
	H11-4						NOT USED
	H11-5						NOT USED
	H11-6	H6-11	ORANGE	18	M		REF +5
POWER INPUT TO MONITOR TRANSFORMER H12 MOLEX 03-09-1038	H12-1	H13 CAP	RED	18	F		
	H12-2	H2-2	GREEN	18	F		
	H12-3	H2-1	WHITE	18	F		
MONITOR TRANSFORMER FUSE H13	H13 CAP	H12-1	RED	18			
	H13 BODY	H2-3	RED	18			

WIRE SIDE
PIN 1
PIN 2
PIN 3

7. CONN. H5, H7, OMITTED
6. OTHER END TERMINATED W/Q. (NOTE 5)
5. Q - FEMALE QUICK DISCONNECT.
4. F - FEMALE SOCKET 02-09-1118
3. M - MALE PIN 02-09-2118
2. WN - WIRE NUT CONNECTION.
1. TWISTED WIRE LENGTH ARE AFTER TWISTING ONE PER INCH.

NOTES: UNLESS OTHERWISE SPECIFIED

MATERIAL:	DRAWN BY: TENNES	DATE: 2-12-82	CINEMATRONICS INC El Cajon Ca 92020
FINISH:	PROJECT ENGR:	DATE:	DWG TITLE: WIRE LIST COLOR UPRIGHT
	RELEASE APPROV	DATE:	
	DO NOT SCALE DWG		MODEL NO. / DWG SIZE: D / DWG NO: 88-11374-02 / REV
	TOLERANCE UNLESS OTHERWISE SPECIFIED		
	PROJECTION:	SCALE:	CODE IDENT. / SHEET 1 OF 1

A-3

PROPRIETARY
THIS DOCUMENT IS THE PROPERTY OF CINEMATRONICS INC AND IS NOT TO BE REPRODUCED OR DISTRIBUTED WITHOUT WRITTEN AUTHORIZATION OF CINEMATRONICS INC.

REVISIONS			
REV	DESCRIPTION	DATE	APPROVED
A	ORIG RELEASE ERN # 9	2-9-84	

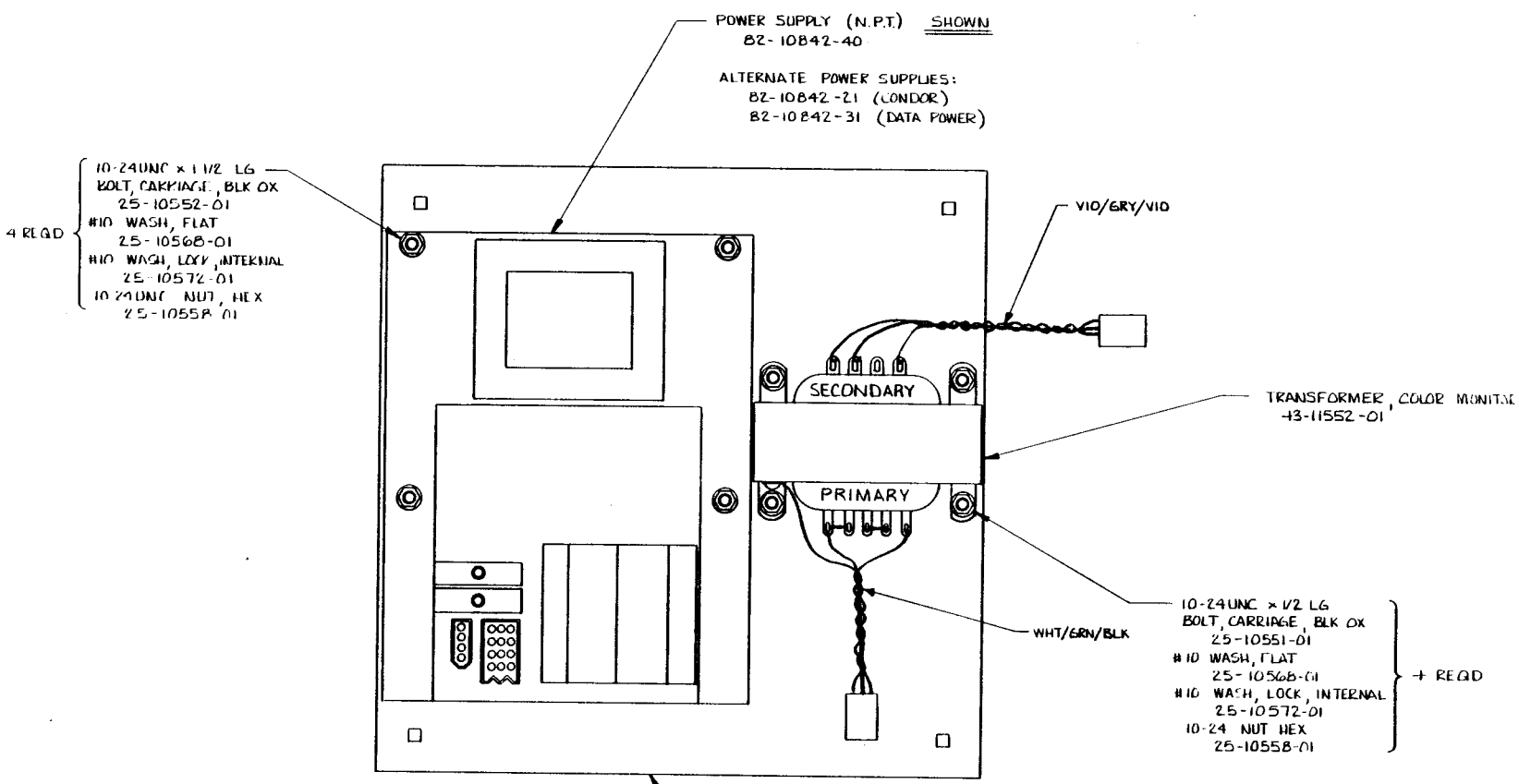

NOTES: UNLESS OTHERWISE SPECIFIED

MATERIAL:	DRAWN BY: G. LAMBIS	DATE: 2/1/84	CINEMATRONICS INC
FINISH:	PROJECT ENGR:	DATE	DWG TITLE: ASSEMBLY/MTG PLATE POWER SUPPLY & TRANS
	RELEASE APPROVED:	DATE	
	DO NOT SCALE DWG		MODEL NO. / DWG SIZE D / DWG NO. 38-11628-01 / REV A
	TOLERANCE: UNLESS OTHERWISE SPECIFIED		CODE IDENT. / SHEET 1 OF 1
	PROJECTION:	SCALE:	

A-4

PROPRIETARY
THIS DOCUMENT IS THE PROPERTY OF CINEMATRONICS INC. AND IS NOT TO BE REPRODUCED OR DISTRIBUTED WITHOUT WRITTEN AUTHORIZATION OF CINEMATRONICS INC.

REVISIONS			
REV	DESCRIPTION	DATE	APPROVED

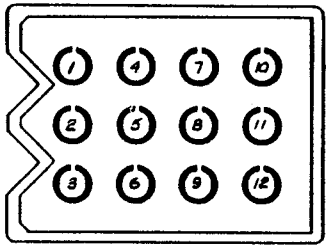

J1

	J1 CONNECTOR DATA		
	PIN NO.	WIRE COLOR	FUNCTION
	J1-1	GRN	CHASSIS GND
	J1-2	WHT	TXFMR LUG #3
1	J1-3	RED/BLK	TXFMR LUG #1
	J1-4	BROWN (2)	6.3VAC GND
	J1-5	WHITE (2)	6.3VAC
2	J1-6	YEL	SPOT KILL (25VAC)
3	J1-7	RED/GRAY	+25V
4	J1-8	BLU (2)	-25V
	J1-9	ORG (2)	+5V
	J1-10	ORG	+5V
	J1-11	BLK (2)	+5V RETURN
	J1-12	BLK/WHT	± 25V RETURN

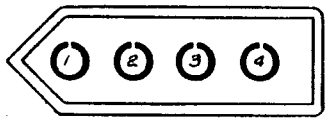

J2

	J2 CONNECTOR DATA	
PIN NO.	WIRE COLOR	FUNCTION
J2-1	BLACK	TXFMR LUG #1
J2-2	WHITE	TXFMR LUG #3
J2-3	BLACK	TXFMR LUG #2
J2-4	WHITE	TXFMR LUG #4

POWER SUPPLY CONECTORS
BOTH J1 & J2 AS VIEWED FROM THE FRONT OF POWER SUPPLY.

1. 9AMP INLINE FUSE.
2. .3AMP INLINE FUSE.
3. 3AMP INLINE CIRCUIT BREAKER CB 1.
4. 3AMP INLINE CIRCUIT BREAKER CB 2

NOTES: UNLESS OTHERWISE SPECIFIED

MATERIAL:	DRAWN BY: A. Macau	DATE 8/27/79	CINEMATRONICS INC. El Cajon Ca. 92020
FINISH: BREAK ALL SHARP EDGES AND DEBURR ALL HOLES.	PROJECT ENGR: C. Williams	DATE 9-79	DWG TITLE: POWER SUPPLY PINOUT ILLUSTRATION
	RELEASE APPROV: C.E.L.	DATE 9-79	
	DO NOT SCALE DWG		MODEL NO. / DWG SIZE C / DWG NO. 72-10877-03 / REV
	TOLERANCE: UNLESS OTHERWISE SPECIFIED		
	PROJECTION:	SCALE:	CODE IDENT. / SHEET 1 OF 1

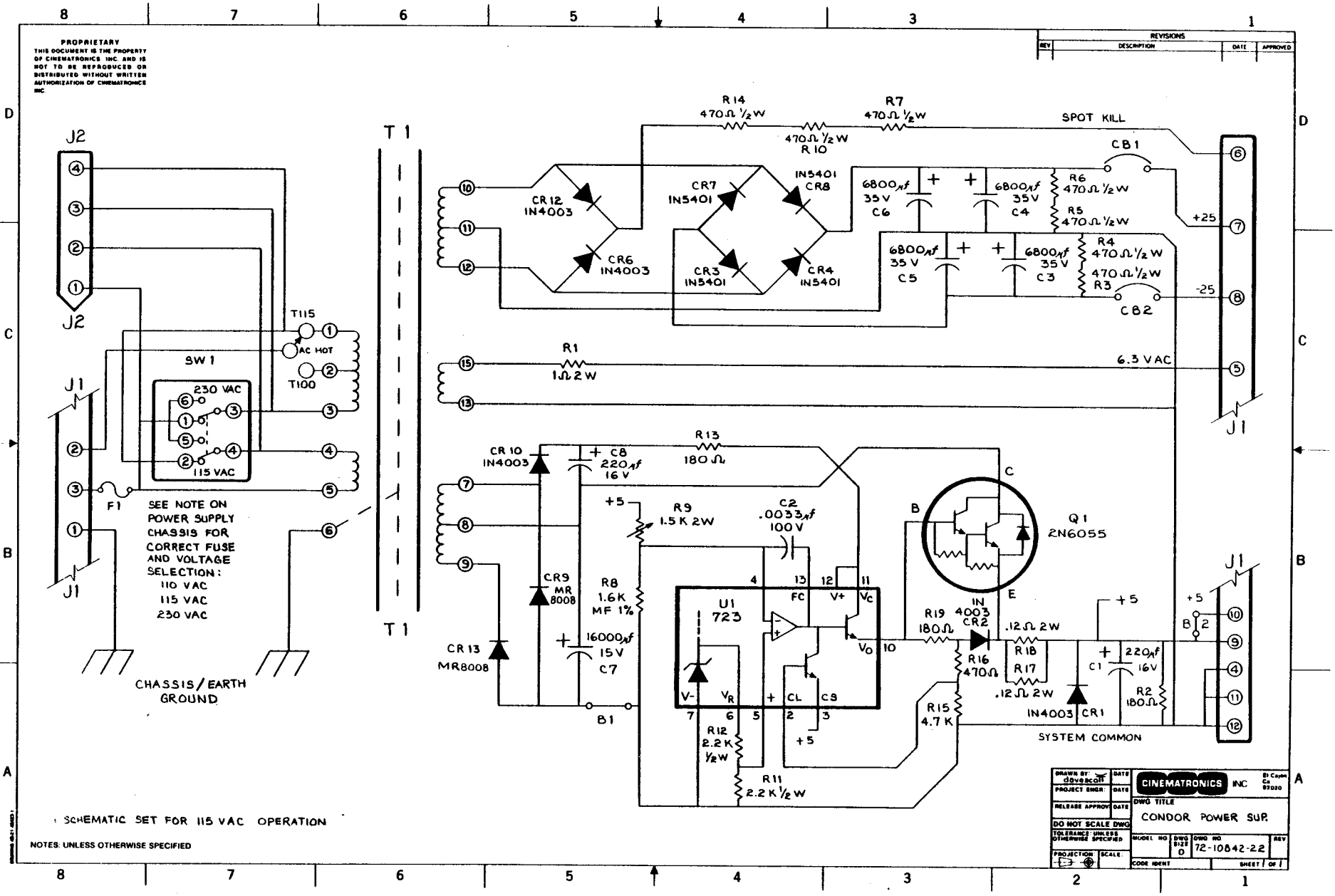
PROPRIETARY
THIS DOCUMENT IS THE PROPERTY OF CINEMATRONICS INC. AND IS NOT TO BE REPRODUCED OR DISTRIBUTED WITHOUT WRITTEN AUTHORIZATION OF CINEMATRONICS INC.
REVISIONS
REV
DESCRIPTION
DATE
APPROVED
J2
J1
T1
T115
AC HOT
T100
SW 1
230 VAC
115 VAC
F1
SEE NOTE ON POWER SUPPLY CHASSIS FOR CORRECT FUSE AND VOLTAGE SELECTION:
110 VAC
115 VAC
230 VAC
CHASSIS/EARTH GROUND
R14 470Ω 1/2W
R7 470Ω 1/2W
470Ω 1/2W R10
SPOT KILL
CB1
CB2
CR12 IN4003
CR6 IN4003
CR7 IN5401
CR3 IN5401
IN5401 CR8
CR4 IN5401
6800μf 35V C6
6800μf 35V C4
6800μf 35V C5
6800μf 35V C3
R6 470Ω 1/2W
R5 470Ω 1/2W
R4 470Ω 1/2W
470Ω 1/2W R3
+25
-25
R1 1Ω 2W
6.3 VAC
CR10 IN4003
C8 220μf 16V
R13 180Ω
R9 1.5K 2W
C2 .0033μf 100V
CR9 MR 8008
R8 1.6K MF 1%
16000μf 15V C7
CR13 MR8008
B1
U1 723
FC
V+
Vc
Vo
V-
VR
CL
CS
R12 2.2K 1/2W
R11 2.2K 1/2W
Q1 2N6055
R19 180Ω
IN 4003 CR2
R16 470Ω
R15 4.7K
.12Ω 2W
R18
R17
.12Ω 2W
C1 220μf 16V
R2 180Ω
IN4003 CR1
SYSTEM COMMON
SCHEMATIC SET FOR 115 VAC OPERATION
NOTES: UNLESS OTHERWISE SPECIFIED
DRAWN BY: dovescott
PROJECT ENGR:
RELEASE APPROV:
DO NOT SCALE DWG
TOLERANCE UNLESS OTHERWISE SPECIFIED
PROJECTION
SCALE:
CINEMATRONICS INC
El Cajon Ca 92020
DWG TITLE
CONDOR POWER SUP.
MODEL NO
DWG SIZE D
DWG NO 72-10842-22
REV
CODE IDENT
SHEET 1 OF 1

PROPRIETARY
THIS DOCUMENT IS THE PROPERTY OF NATIONAL POWER TECHNOLOGY, NOT TO BE REPRODUCED OR DISTRIBUTED WITHOUT WRITTEN AUTHORIZATION OF NATIONAL POWER TECHNOLOGY INCORPORATED.

REVISIONS			
REV	DESCRIPTION	DATE	APPROVED

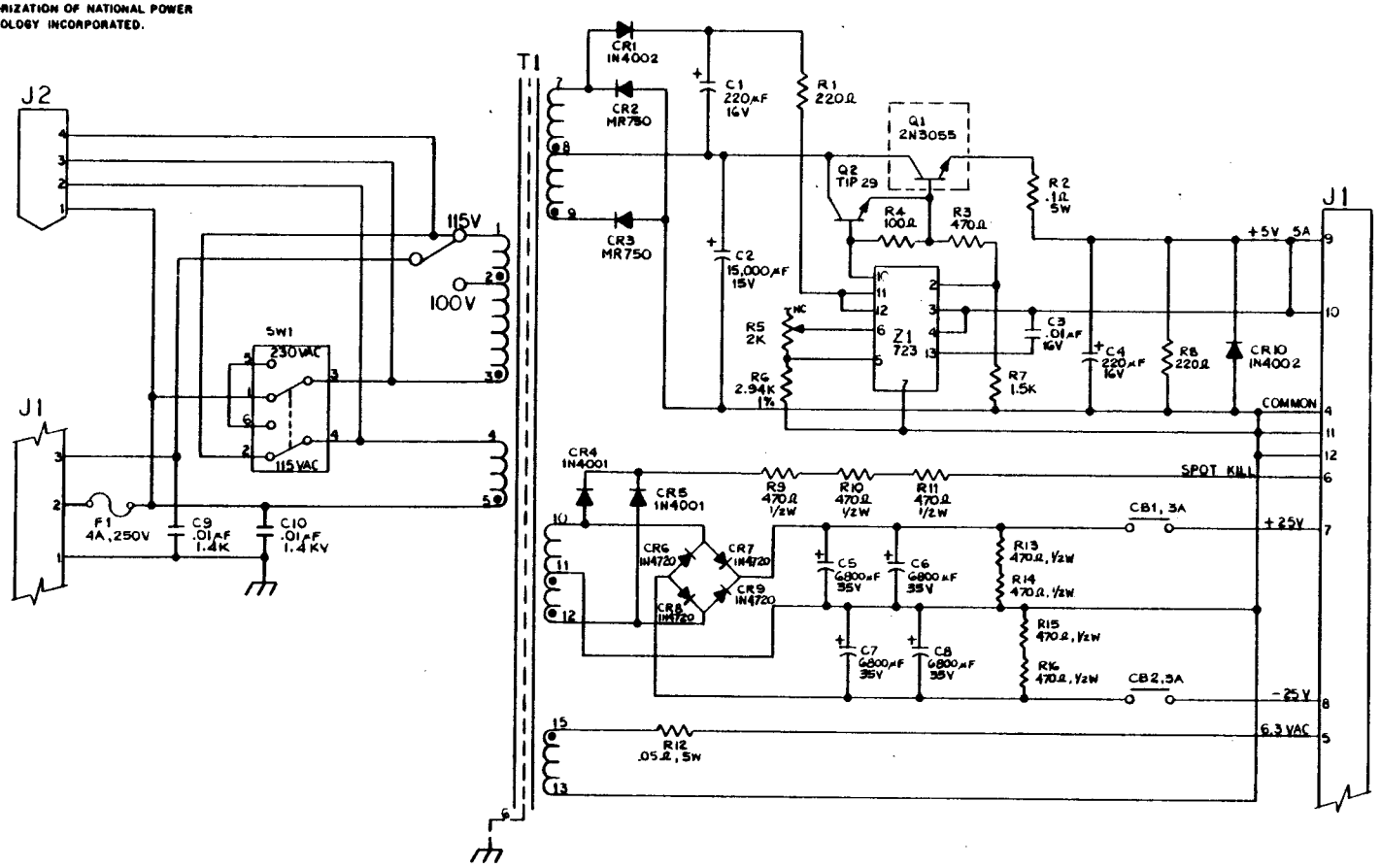

NOTES: UNLESS OTHERWISE SPECIFIED

MATERIAL:	DRAWN BY: C ESCALERAS	DATE	CINEMATRONICS INC. El Cajon Ca. 92020
	PROJECT ENGR:	DATE	DWG TITLE: NATIONAL POWER TECHNOLOGY POWER SUPPLY
	RELEASE APPROV:	DATE	
FINISH:	DO NOT SCALE DWG		
	TOLERANCE: UNLESS OTHERWISE SPECIFIED		MODEL NO. / DWG SIZE C / DWG NO. 72-10842-42 / REV. A
	PROJECTION:	SCALE:	CODE IDENT. / SHEET 1 OF 1

PROPRIETARY
THIS DOCUMENT IS THE PROPERTY OF CINEMATRONICS INC AND IS NOT TO BE REPRODUCED OR DISTRIBUTED WITHOUT WRITTEN AUTHORIZATION OF CINEMATRONICS INC

REVISIONS			
REV	DESCRIPTION	DATE	APPROVED
A	ORIG RELEASE ERN #	2-24-82	

WIRE LIST

FROM	TO	COLOR	AWG	LENGTH	REMARKS
PWB-1, P-0	PB6-2	BRN	22	15"	
P 1	PB5-2	RED		13"	
P 2	PB4-2	ORANGE		10½"	
P 3	PB3-2	YEL		6½"	
P 4	PB2-2	GRN		8½"	
P 5	PB1-2	BLU		10"	
P 6	P1-1	VIO		11"	
GND 1	P1-3	BLK		11½"	
GND 2	PB1-1	BLK	22	11½"	

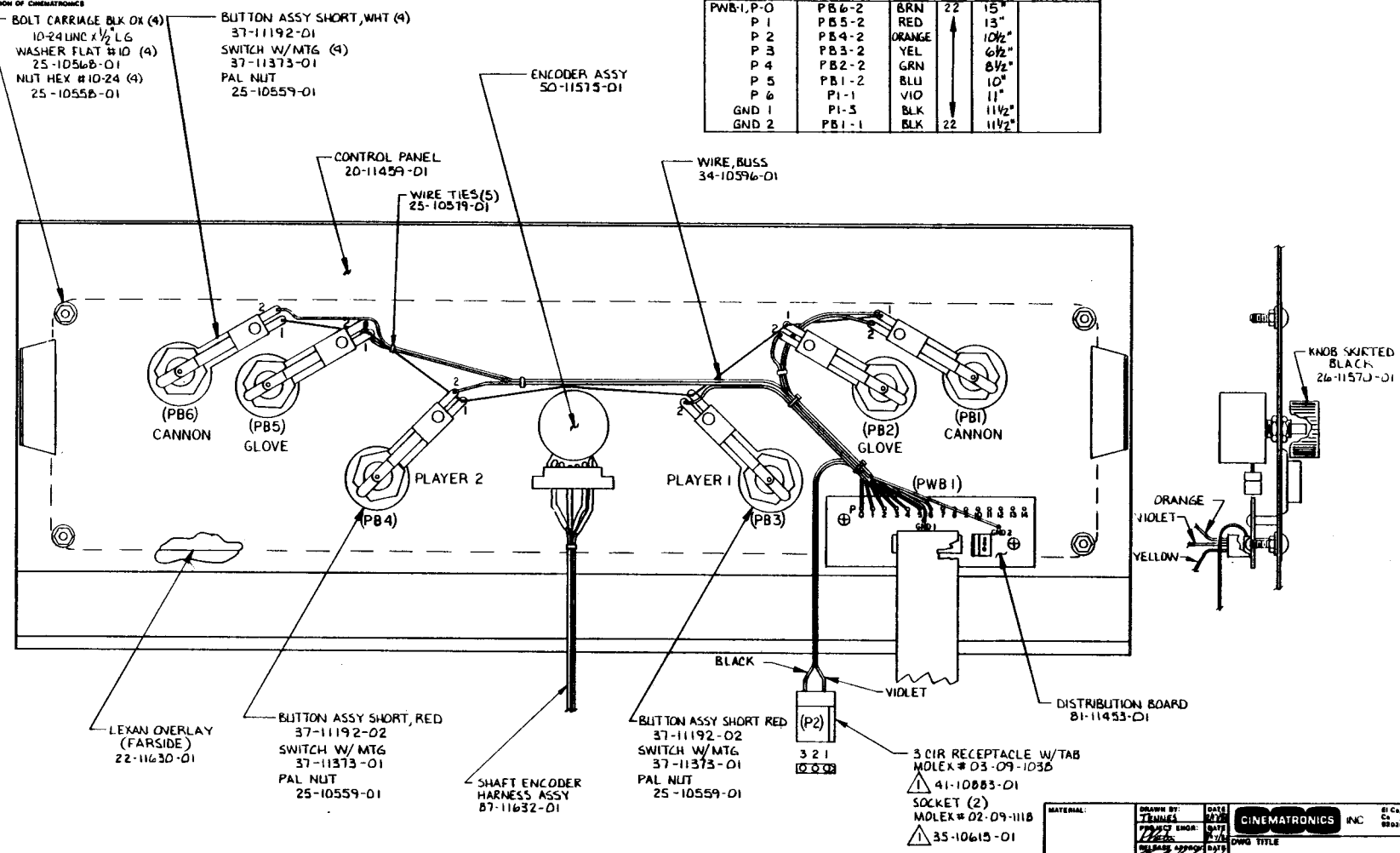

⚠1 CINEMATRONICS P/N.

NOTES: UNLESS OTHERWISE SPECIFIED

MATERIAL:	DRAWN BY: TENNES	DATE	CINEMATRONICS INC El Cajon Ca 92020
	PROJECT ENGR:	DATE	DWG TITLE: CONTROL PANEL ASSY
	RELEASE APPROV:	DATE	
FINISH:	DO NOT SCALE DWG		
	TOLERANCE: UNLESS OTHERWISE SPECIFIED		MODEL NO. / DWG SIZE D / DWG NO. 38-11554-01 / REV A
	PROJECTION: / SCALE:		CODE IDENT. / SHEET 1 OF

PROPRIETARY
THIS DOCUMENT IS THE PROPERTY OF CINEMATRONICS INC. AND IS NOT TO BE REPRODUCED OR DISTRIBUTED WITHOUT WRITTEN AUTHORIZATION OF CINEMATRONICS INC.

REVISIONS			
REV	DESCRIPTION	DATE	APPROVED
A	ORIG. RELEASE ECN# 9	2-19-82	

PLAYER CONTROL PANEL - REAR VIEW

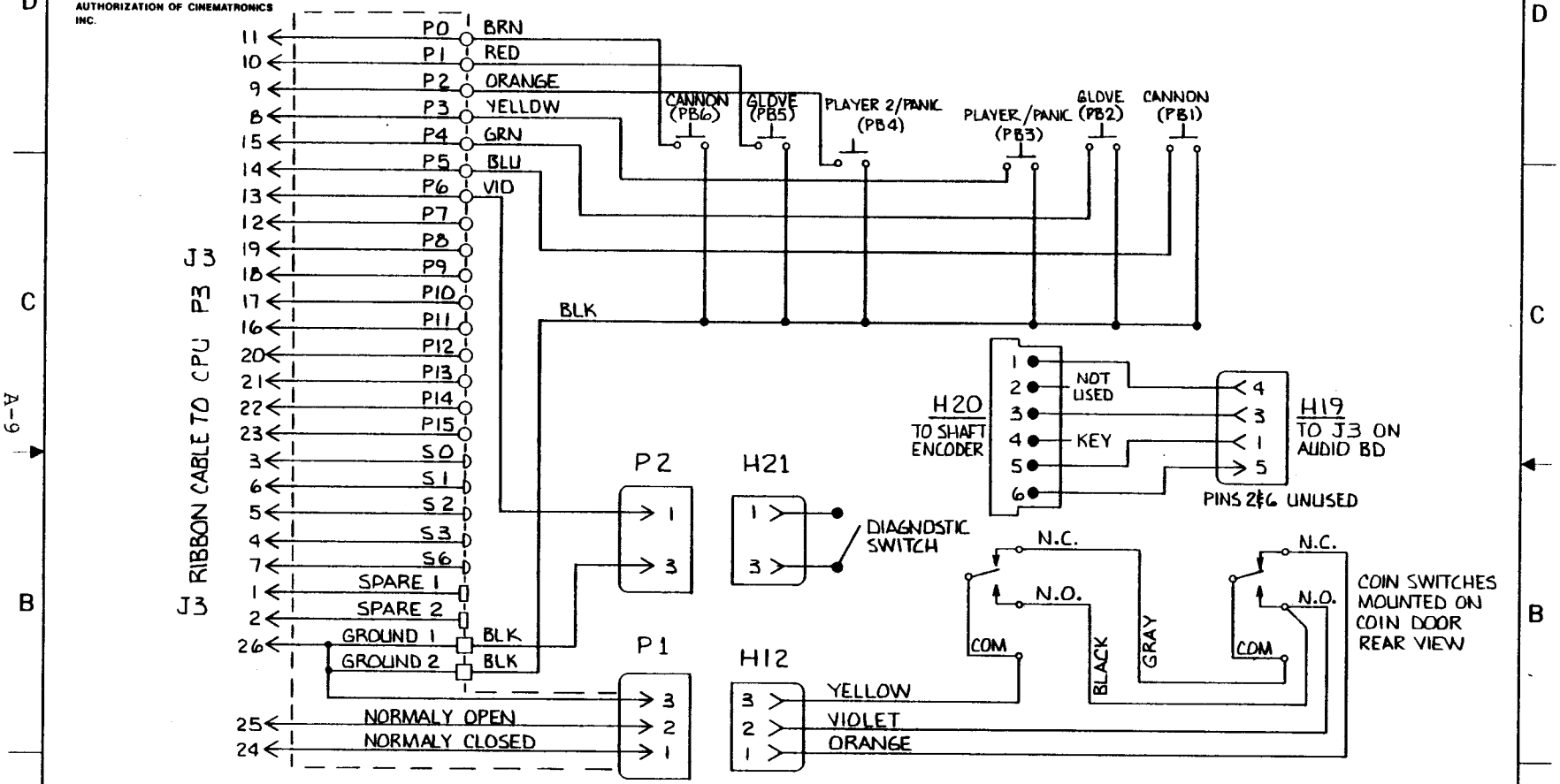

NOTES: UNLESS OTHERWISE SPECIFIED

MATERIAL:	DRAWN BY: TENNES	DATE 2/19/82	CINEMATRONICS INC El Cajon Ca. 92020
	PROJECT ENGR:	DATE	DWG TITLE SCHEMATIC PLAYER CONTROL PANEL
FINISH:	RELEASE APPROV:	DATE	
	DO NOT SCALE DWG		MODEL NO. / DWG SIZE C / DWG NO. 72-11554-00 / REV. A
	TOLERANCE: UNLESS OTHERWISE SPECIFIED		CODE IDENT. / SHEET OF
	PROJECTION:	SCALE:	

PROPRIETARY
THIS DOCUMENT IS THE PROPERTY OF CINEMATRONICS INC. AND IS NOT TO BE REPRODUCED OR DISTRIBUTED WITHOUT WRITTEN AUTHORIZATION OF CINEMATRONICS INC

REVISIONS			
REV	DESCRIPTION	DATE	APPROVED

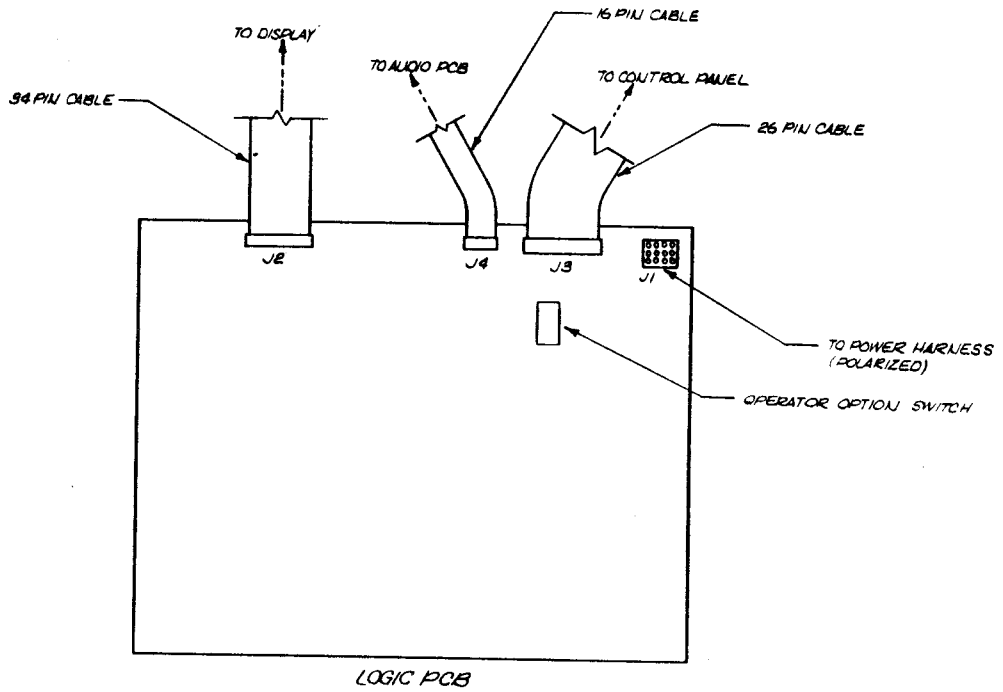

NOTES: UNLESS OTHERWISE SPECIFIED

MATERIAL:	DRAWN BY:	DATE	CINEMATRONICS INC El Cajon Ca 92020
FINISH: BREAK ALL SHARP EDGES AND DEBURR ALL HOLES.	PROJECT ENGR:	DATE	DWG TITLE: C.P.U. BOARD ILLUSTRATION
	RELEASE APPROV:	DATE	
	DO NOT SCALE DWG		
	TOLERANCE UNLESS OTHERWISE SPECIFIED		MODEL NO. / DWG SIZE C / DWG NO. 72-10626-01 / REV
	PROJECTION:	SCALE:	CODE IDENT. / SHEET / OF /

A-10

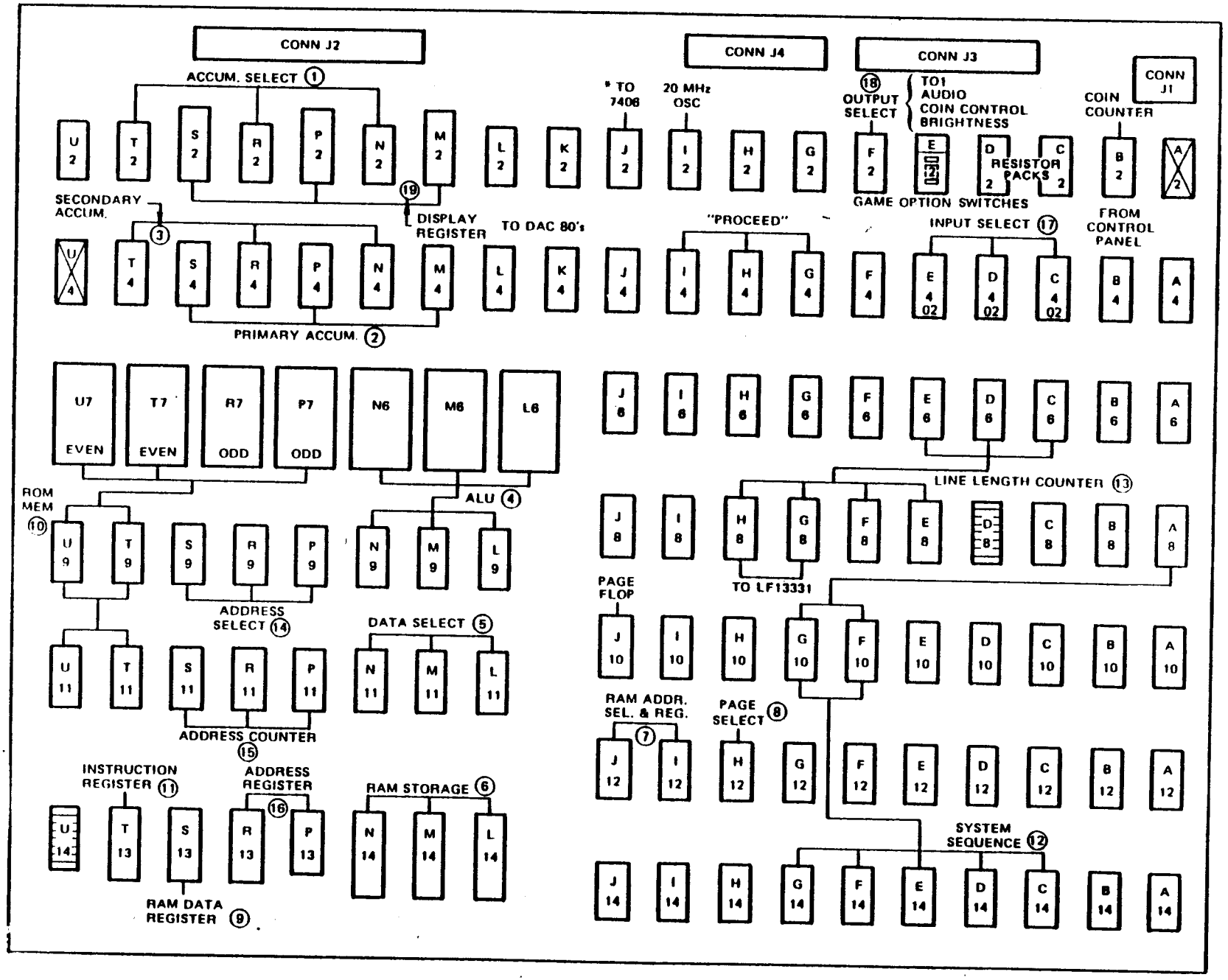
CONN J2
CONN J4
CONN J3
CONN J1
ACCUM. SELECT (1)
* TO 7408
20 MHz OSC
(18) OUTPUT SELECT
TO1
AUDIO
COIN CONTROL
BRIGHTNESS
COIN COUNTER
RESISTOR PACKS
GAME OPTION SWITCHES
SECONDARY ACCUM. (3)
(19) DISPLAY REGISTER
TO DAC 80's
"PROCEED"
INPUT SELECT (17)
FROM CONTROL PANEL
PRIMARY ACCUM. (2)
U7 EVEN
T7 EVEN
R7 ODD
P7 ODD
N6
M6
L6
ROM MEM (10)
ALU (4)
LINE LENGTH COUNTER (13)
TO LF13331
PAGE FLOP
ADDRESS SELECT (14)
DATA SELECT (5)
ADDRESS COUNTER (15)
RAM ADDR. SEL. & REG. (7)
PAGE SELECT (8)
INSTRUCTION REGISTER (11)
ADDRESS REGISTER (16)
RAM STORAGE (6)
SYSTEM SEQUENCE (12)
RAM DATA REGISTER (9)

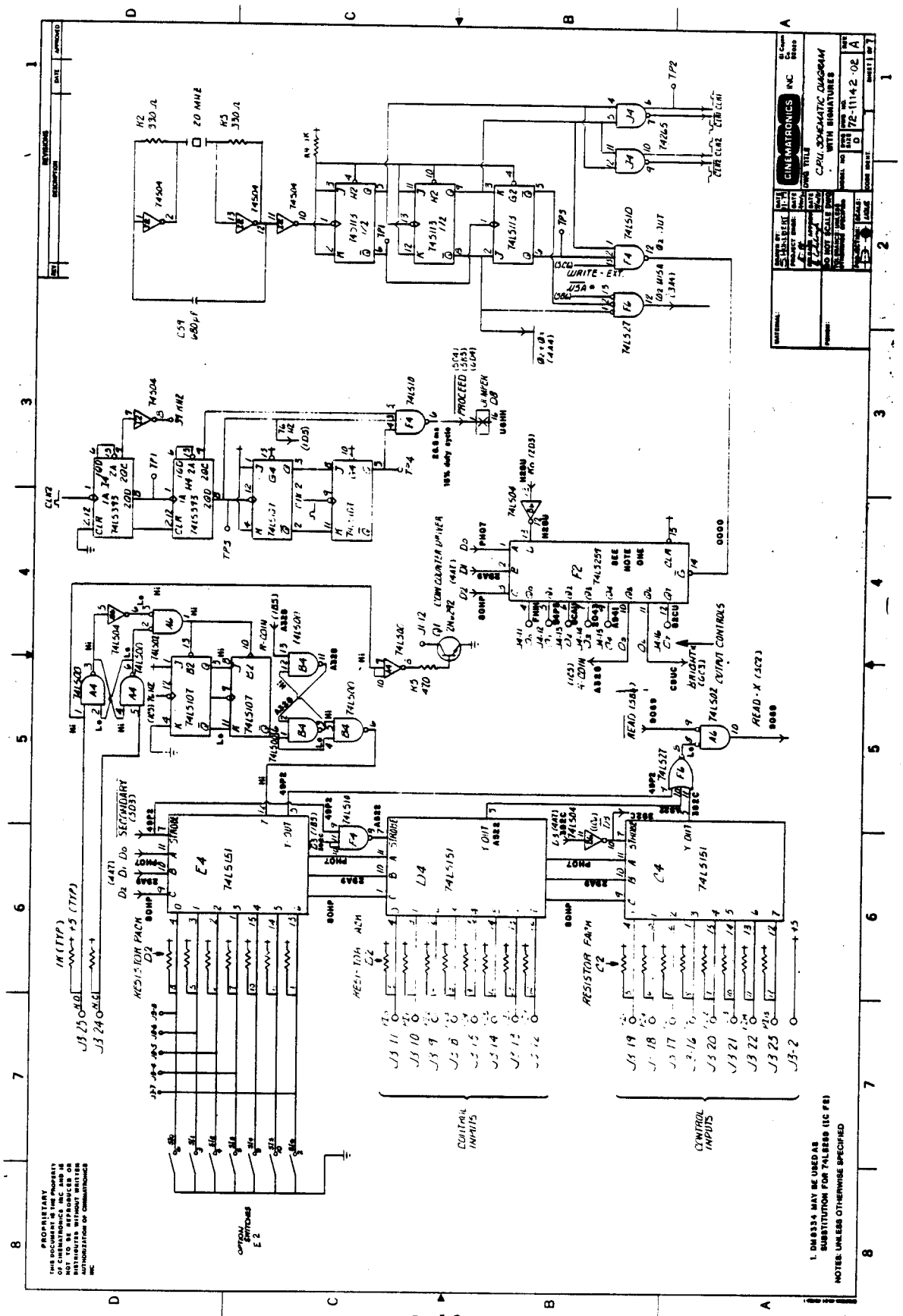
CINEMATRONICS INC
CPU SCHEMATIC DIAGRAM WITH SIGNATURES
72-11142-02
PROPRIETARY
1. DM8334 MAY BE USED AS SUBSTITUTION FOR 74LS259 (IC F2)
NOTES: UNLESS OTHERWISE SPECIFIED
OPTION SWITCHES E2
RESISTOR PACK D2
RESISTOR PACK C2
CONTROL INPUTS
CONTROL INPUTS
WRITE - EXT.
PROCEED
COIN COUNTER DRIVER
OUTPUT CONTROLS
READ-X (SC2)
READ (SB4)
SECONDARY (SD3)
20 MHZ
15% duty cycle

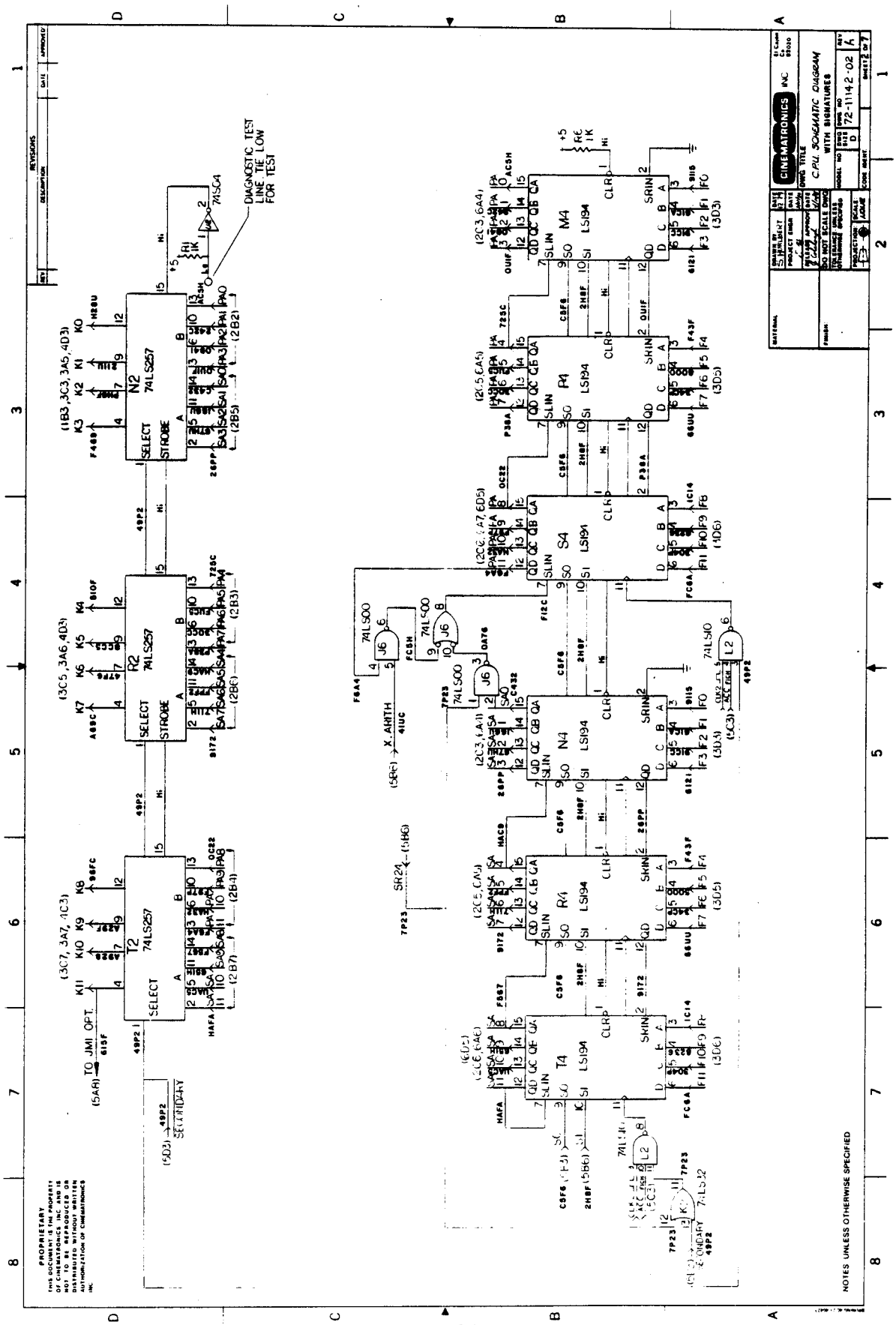
CINEMATRONICS INC
C.P.U. SCHEMATIC DIAGRAM
WITH SIGNATURES
72-11142-02
DIAGNOSTIC TEST LINE TIE LOW FOR TEST
NOTES UNLESS OTHERWISE SPECIFIED
PROPRIETARY
REVISIONS

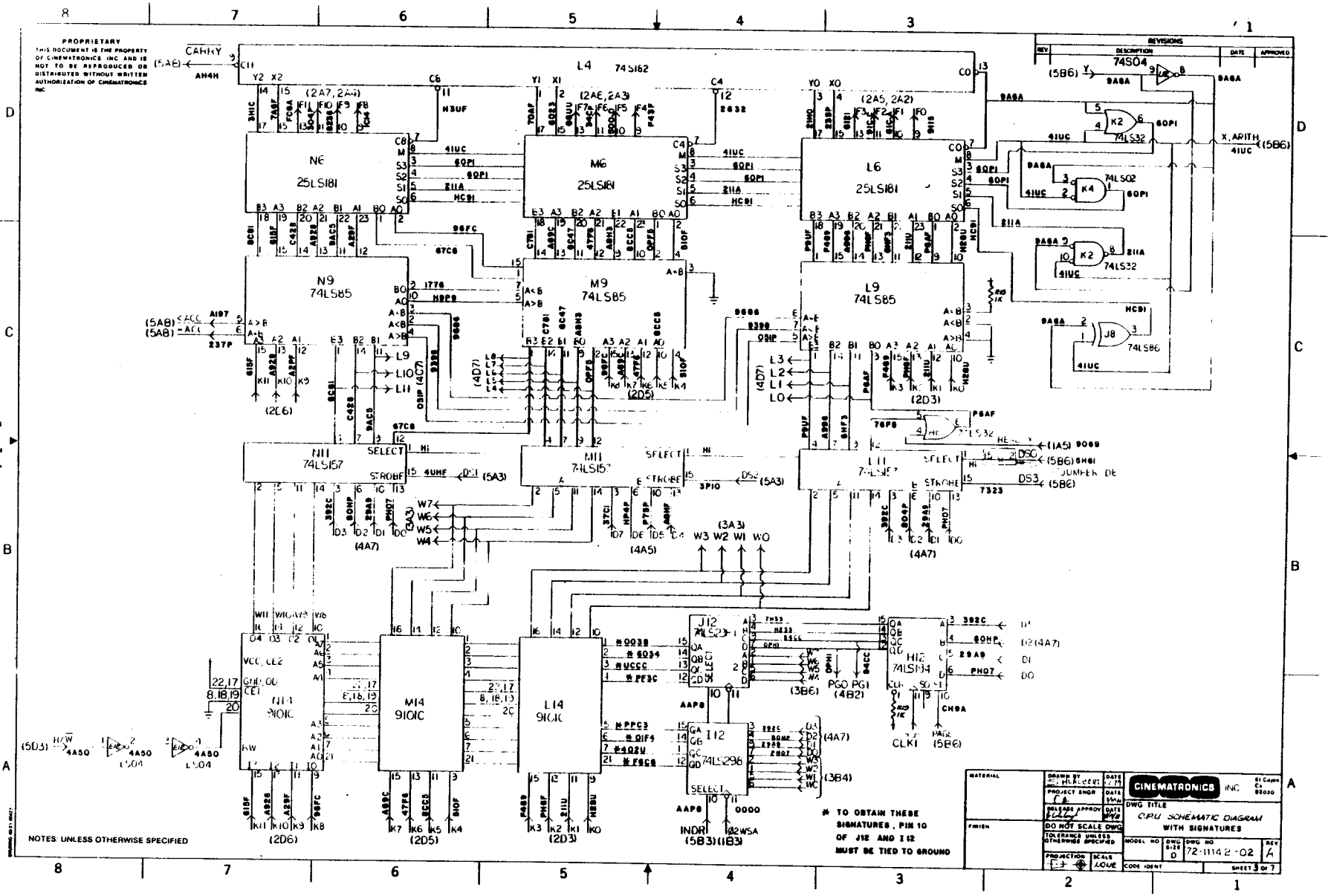
PROPRIETARY
THIS DOCUMENT IS THE PROPERTY OF CINEMATRONICS INC AND IS NOT TO BE REPRODUCED OR DISTRIBUTED WITHOUT WRITTEN AUTHORIZATION OF CINEMATRONICS INC
REVISIONS
REV
DESCRIPTION
DATE
APPROVED
L4 74S182
M6 25LS181
N6 25LS181
L6 25LS181
M9 74LS85
N9 74LS85
L9 74LS85
M11 74LS157
N11 74LS157
L11 74LS157
M14 9101C
N14 9101C
L14 9101C
J12 74LS21
H12 74LS194
I12 74LS298
74S04
74LS32
74LS02
74LS86
CARRY
SELECT
STROBE
NOTES: UNLESS OTHERWISE SPECIFIED
* TO OBTAIN THESE SIGNATURES, PIN 10 OF J12 AND I12 MUST BE TIED TO GROUND
CINEMATRONICS INC
DWG TITLE
C.P.U. SCHEMATIC DIAGRAM WITH SIGNATURES
DWG NO
72-11142-02
REV
A
SHEET 3 OF 7
A-14

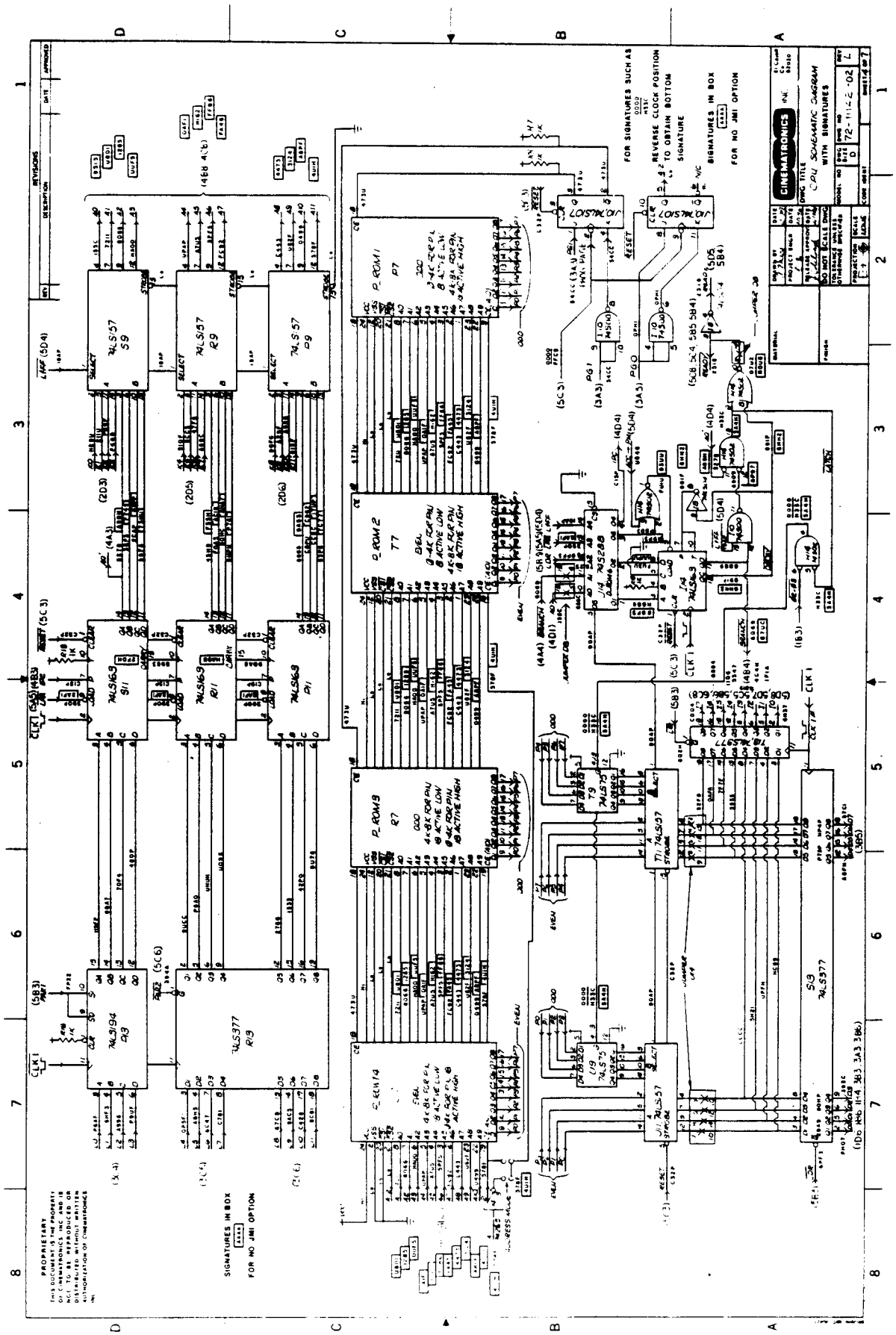
CINEMATRONICS INC
CPU SCHEMATIC DIAGRAM
WITH SIGNATURES
72-11142-02
FOR SIGNATURES SUCH AS
REVERSE CLOCK POSITION
TO OBTAIN BOTTOM
SIGNATURE
SIGNATURES IN BOX
FOR NO JMI OPTION
PROPRIETARY
SIGNATURES IN BOX
FOR NO JMI OPTION

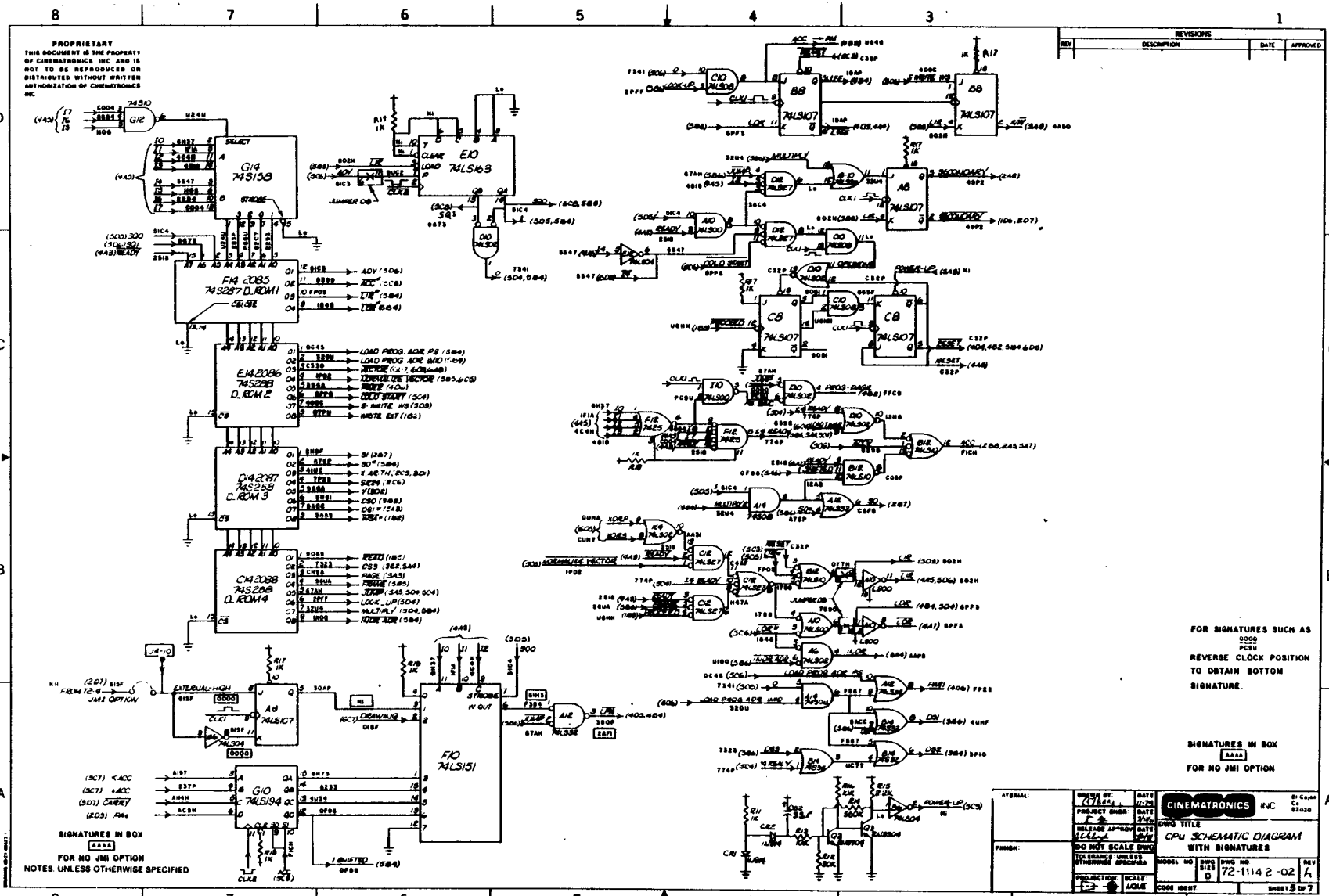
PROPRIETARY
THIS DOCUMENT IS THE PROPERTY OF CINEMATRONICS INC AND IS NOT TO BE REPRODUCED OR DISTRIBUTED WITHOUT WRITTEN AUTHORIZATION OF CINEMATRONICS INC
REVISIONS
REV
DESCRIPTION
DATE
APPROVED
SIGNATURES IN BOX
AAAA
FOR NO JMI OPTION
NOTES: UNLESS OTHERWISE SPECIFIED
FOR SIGNATURES SUCH AS
0000
PCBU
REVERSE CLOCK POSITION TO OBTAIN BOTTOM SIGNATURE.
SIGNATURES IN BOX
AAAA
FOR NO JMI OPTION
CINEMATRONICS INC
DWG TITLE
CPU SCHEMATIC DIAGRAM WITH SIGNATURES
DO NOT SCALE DWG
72-1114-2-02
A
SHEET 5 OF 7
A-16

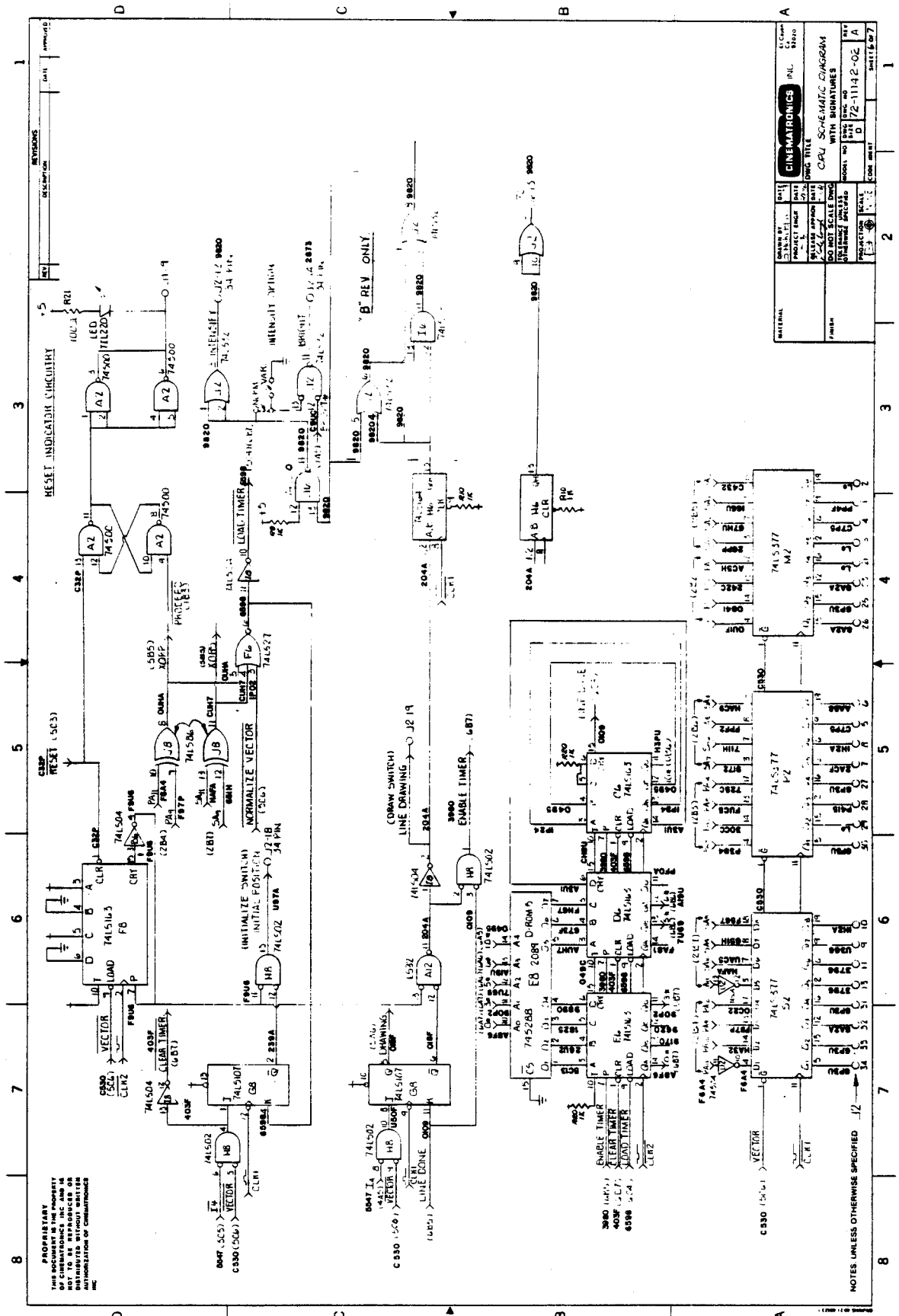
CINEMATRONICS INC
CPU SCHEMATIC DIAGRAM
WITH SIGNATURES
72-11142-02
RESET INDICATOR CIRCUITRY
"B" REV ONLY
NORMALIZE VECTOR
LOAD TIMER
ENABLE TIMER
CLEAR TIMER
LINE DRAWING
LINE DONE
NOTES: UNLESS OTHERWISE SPECIFIED
PROPRIETARY

PROPRIETARY
THIS DOCUMENT IS THE PROPERTY OF CINEMATRONICS INC AND IS NOT TO BE REPRODUCED OR DISTRIBUTED WITHOUT WRITTEN AUTHORIZATION OF CINEMATRONICS INC

REVISIONS			
REV	DESCRIPTION	DATE	APPROVED
A	INITIAL RELEASE ERN NO. 004	5 FEB 1982	

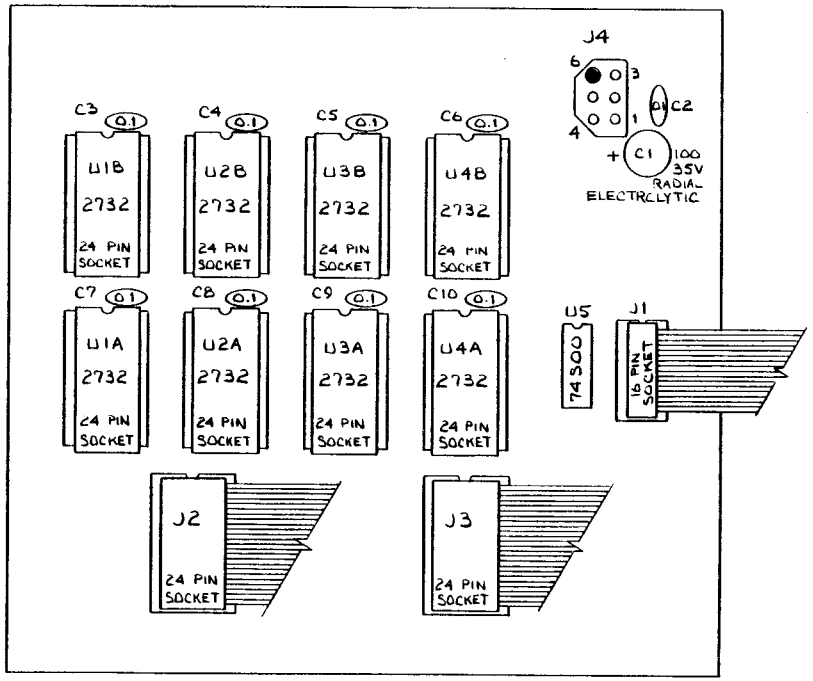

2. CAPACITOR VALUES ARE IN MICRO FARADS
1. C2-C10 ARE DISC CAPACITORS

NOTES. UNLESS OTHERWISE SPECIFIED

5 JANUARY 1982

MATERIAL:	DRAWN BY: DOUG SCOTT	DATE 1-5-82	CINEMATRONICS INC El Cajon Ca 92020
FINISH:	PROJECT ENGR:	DATE	DWG TITLE: 32 K MEMORY BOARD
	RELEASE APPROVAL:	DATE	
	DO NOT SCALE DWG		MODEL NO
	TOLERANCE UNLESS OTHERWISE SPECIFIED		DWG SIZE D / DWG NO 61-11460-00 / REV A
	PROJECTION	SCALE 2:1	CODE IDENT / SHEET 1 OF 1

61-11460-00
32 K MEMORY BOARD

A-18

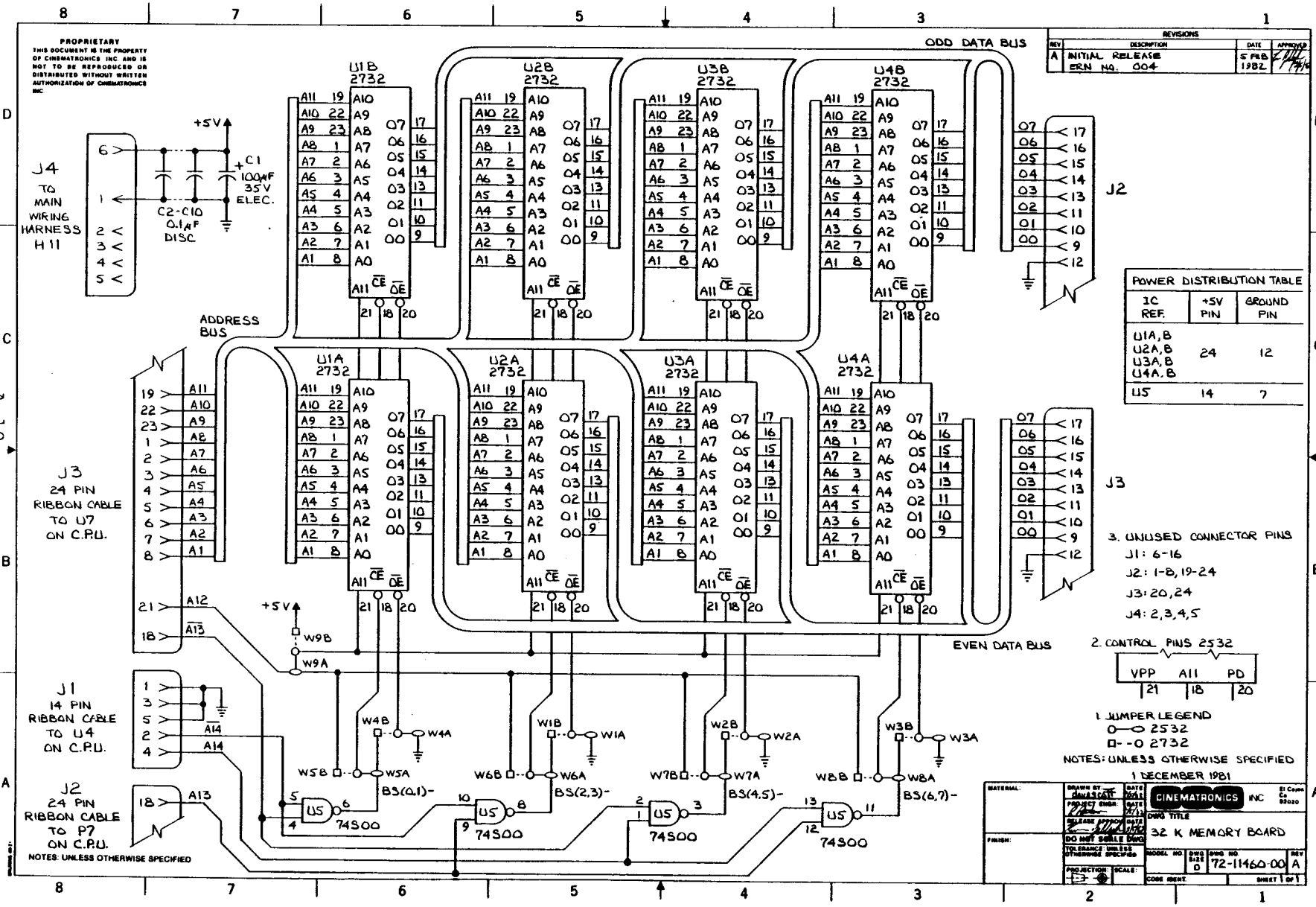
PROPRIETARY
THIS DOCUMENT IS THE PROPERTY OF CINEMATRONICS INC AND IS NOT TO BE REPRODUCED OR DISTRIBUTED WITHOUT WRITTEN AUTHORIZATION OF CINEMATRONICS INC
REVISIONS
REV A INITIAL RELEASE ERN NO. 004 DATE 5 FEB 1982
ODD DATA BUS
EVEN DATA BUS
ADDRESS BUS
U1B 2732
U2B 2732
U3B 2732
U4B 2732
U1A 2732
U2A 2732
U3A 2732
U4A 2732
J4 TO MAIN WIRING HARNESS H11
+5V
C1 100MF 35V ELEC.
C2-C10 0.1MF DISC
J2
J3
J3 24 PIN RIBBON CABLE TO U7 ON C.P.U.
J1 14 PIN RIBBON CABLE TO U4 ON C.P.U.
J2 24 PIN RIBBON CABLE TO P7 ON C.P.U.
NOTES: UNLESS OTHERWISE SPECIFIED
W9B
W9A
W4B
W4A
W5B
W5A
W1B
W1A
W6B
W6A
W2B
W2A
W7B
W7A
W3B
W3A
W8B
W8A
BS(0,1)-
BS(2,3)-
BS(4,5)-
BS(6,7)-
U5
74S00
POWER DISTRIBUTION TABLE
IC REF. | +5V PIN | GROUND PIN
U1A,B U2A,B U3A,B U4A.B | 24 | 12
U5 | 14 | 7
3. UNUSED CONNECTOR PINS
J1: 6-16
J2: 1-8, 19-24
J3: 20, 24
J4: 2,3,4,5
2. CONTROL PINS 2532
VPP 21 A11 18 PD 20
1. JUMPER LEGEND
O—O 2532
□--O 2732
NOTES: UNLESS OTHERWISE SPECIFIED
1 DECEMBER 1981
CINEMATRONICS INC
32 K MEMORY BOARD
DO NOT SCALE DWG
72-11460-00 A
SHEET 1 OF 1
72-11460 32 K MEMORY BOARD 1/1
A-19

SMALL HEAT SINK
IS PLACED ON TOP OF
TRANSISTOR TAB

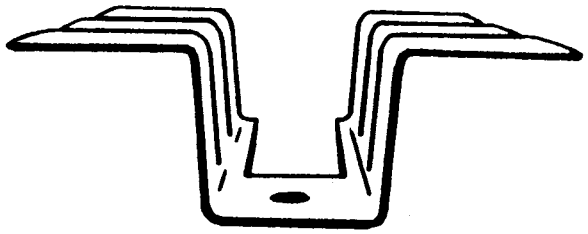

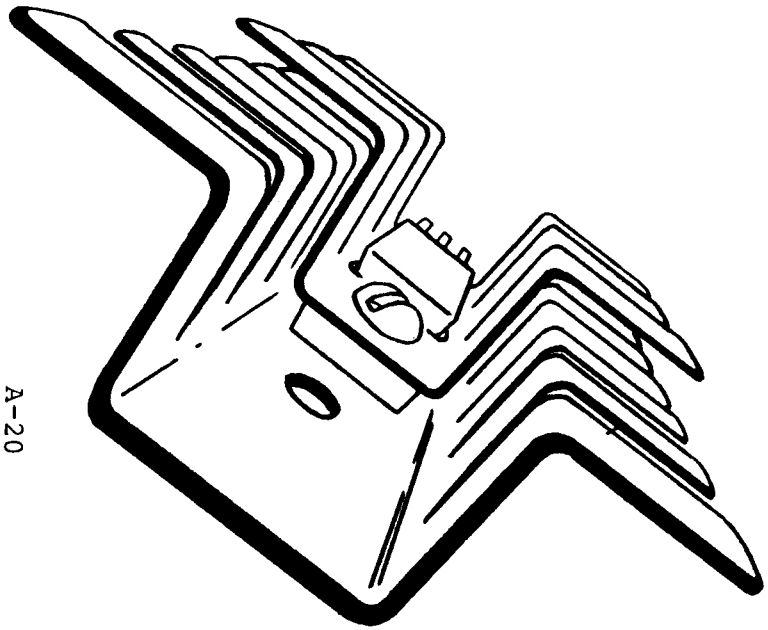

THERMAL
COMPOUND

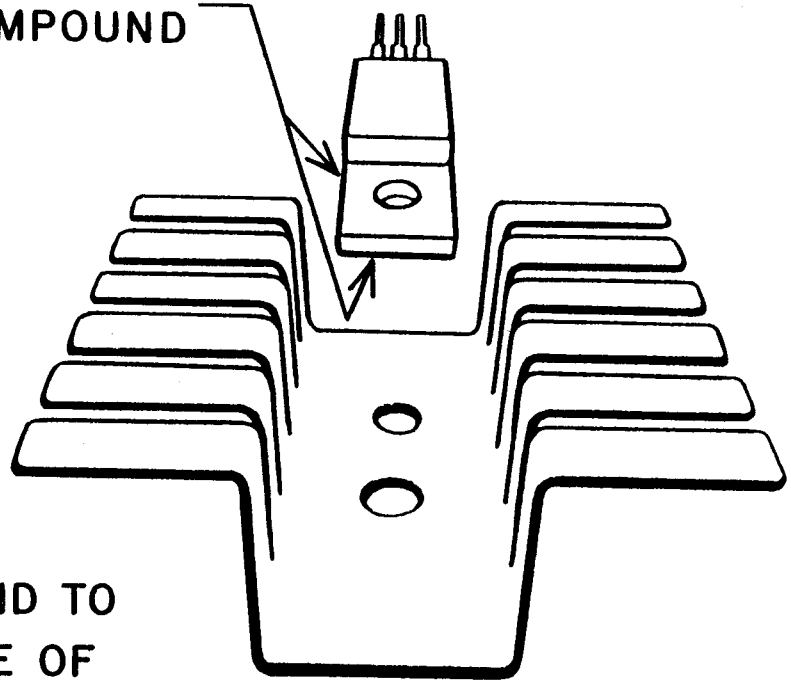

APPLY THERMAL COMPOUND TO
ENTIRE BOTTOM SURFACE OF
TRANSISTOR AND TOP OF TAB

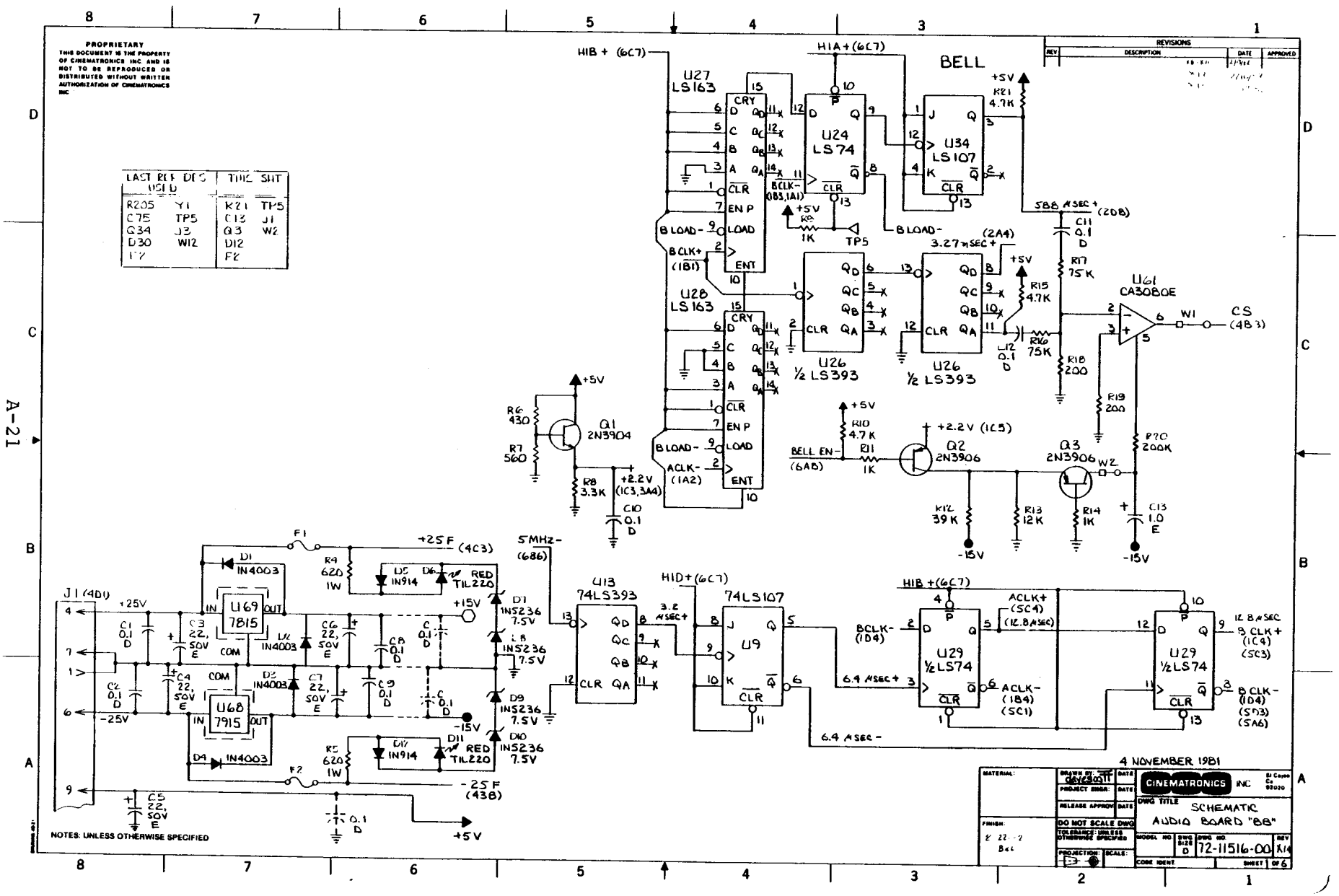
PROPRIETARY
THIS DOCUMENT IS THE PROPERTY OF CINEMATRONICS INC AND IS NOT TO BE REPRODUCED OR DISTRIBUTED WITHOUT WRITTEN AUTHORIZATION OF CINEMATRONICS INC
LAST REF DES USED
R205 Y1
C75 TP5
Q34 J3
D30 W12
F2
THIS SHT
R21 TP5
C13 J1
Q3 W2
D12
F2
REVISIONS
REV
DESCRIPTION
DATE
APPROVED
BELL
U27 LS163
U28 LS163
U24 LS74
U34 LS107
U26 ½ LS393
U61 CA3080E
Q1 2N3904
Q2 2N3906
Q3 2N3906
U13 74LS393
74LS107
U29 ½LS74
U69 7815
U68 7915
J1 (4D1)
CS (4B3)
4 NOVEMBER 1981
CINEMATRONICS INC
DWG TITLE
SCHEMATIC
AUDIO BOARD "BB"
DO NOT SCALE DWG
72-11516-00
NOTES: UNLESS OTHERWISE SPECIFIED

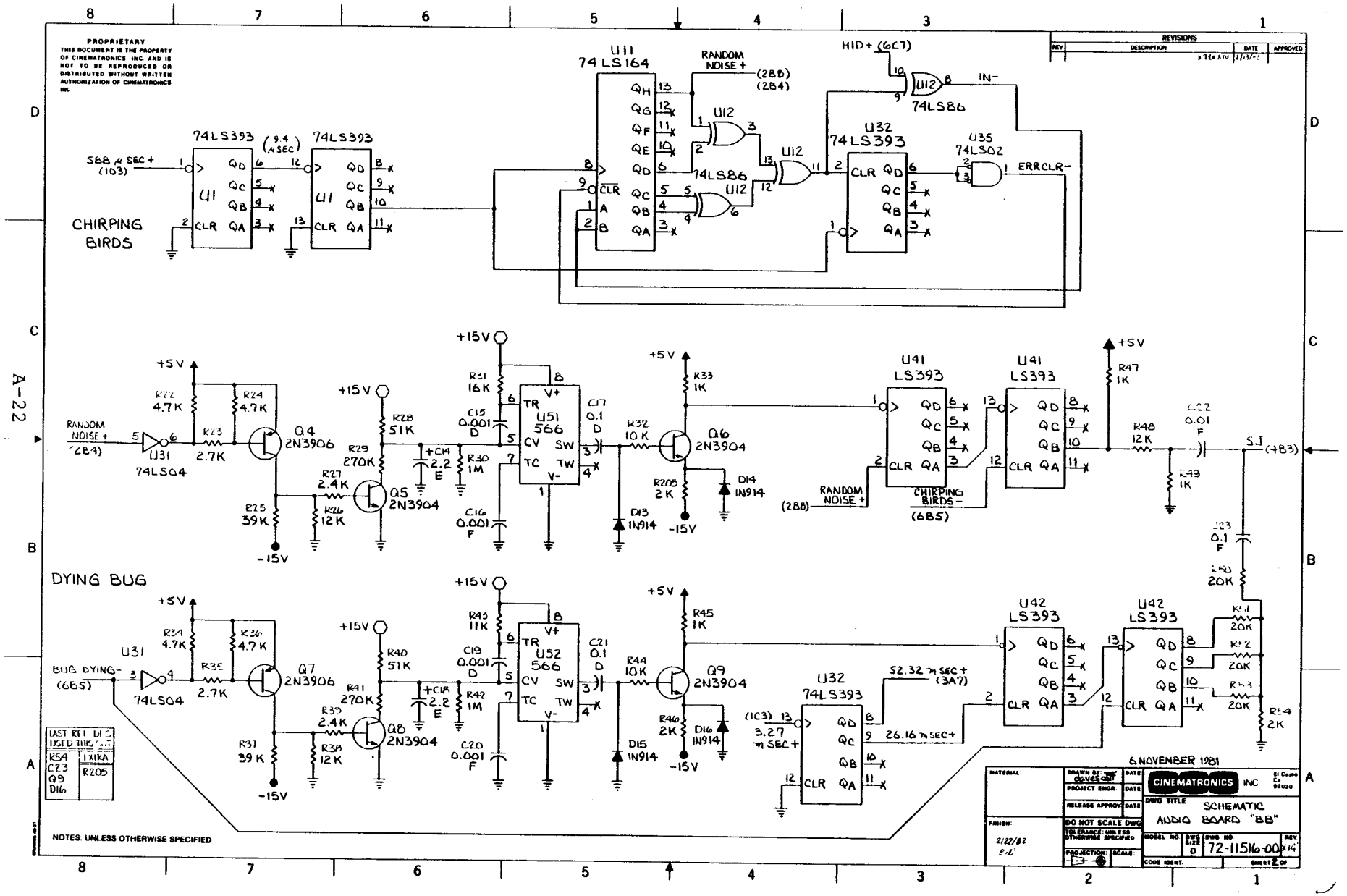
PROPRIETARY
THIS DOCUMENT IS THE PROPERTY OF CINEMATRONICS INC AND IS NOT TO BE REPRODUCED OR DISTRIBUTED WITHOUT WRITTEN AUTHORIZATION OF CINEMATRONICS INC
REVISIONS
REV
DESCRIPTION
DATE
APPROVED
CHIRPING BIRDS
74LS393
(9.4 μSEC)
SBB μ SEC + (1D3)
U11
74LS164
RANDOM NOISE + (2B8) (2B4)
HID + (6C7)
IN-
U12
74LS86
U32
74LS393
U35
74LS02
ERRCLR-
DYING BUG
RANDOM NOISE + (2B4)
U31
74LS04
Q4
2N3906
Q5
2N3904
U51
566
Q6
2N3904
U41
LS393
CHIRPING BIRDS - (6B5)
RANDOM NOISE + (2B8)
SJ (4B3)
BUG DYING - (6B5)
Q7
2N3906
Q8
2N3904
U52
566
Q9
2N3904
U42
LS393
52.32 m SEC + (3A7)
26.16 m SEC +
(1C3) 3.27 m SEC +
+5V
-15V
+15V
LAST REF DES USED THIS SHT
R54
C23
Q9
D16
EXTRA
R205
NOTES: UNLESS OTHERWISE SPECIFIED
6 NOVEMBER 1981
CINEMATRONICS INC
DWG TITLE
SCHEMATIC
AUDIO BOARD "BB"
DO NOT SCALE DWG
72-11516-00
SHEET 2 OF

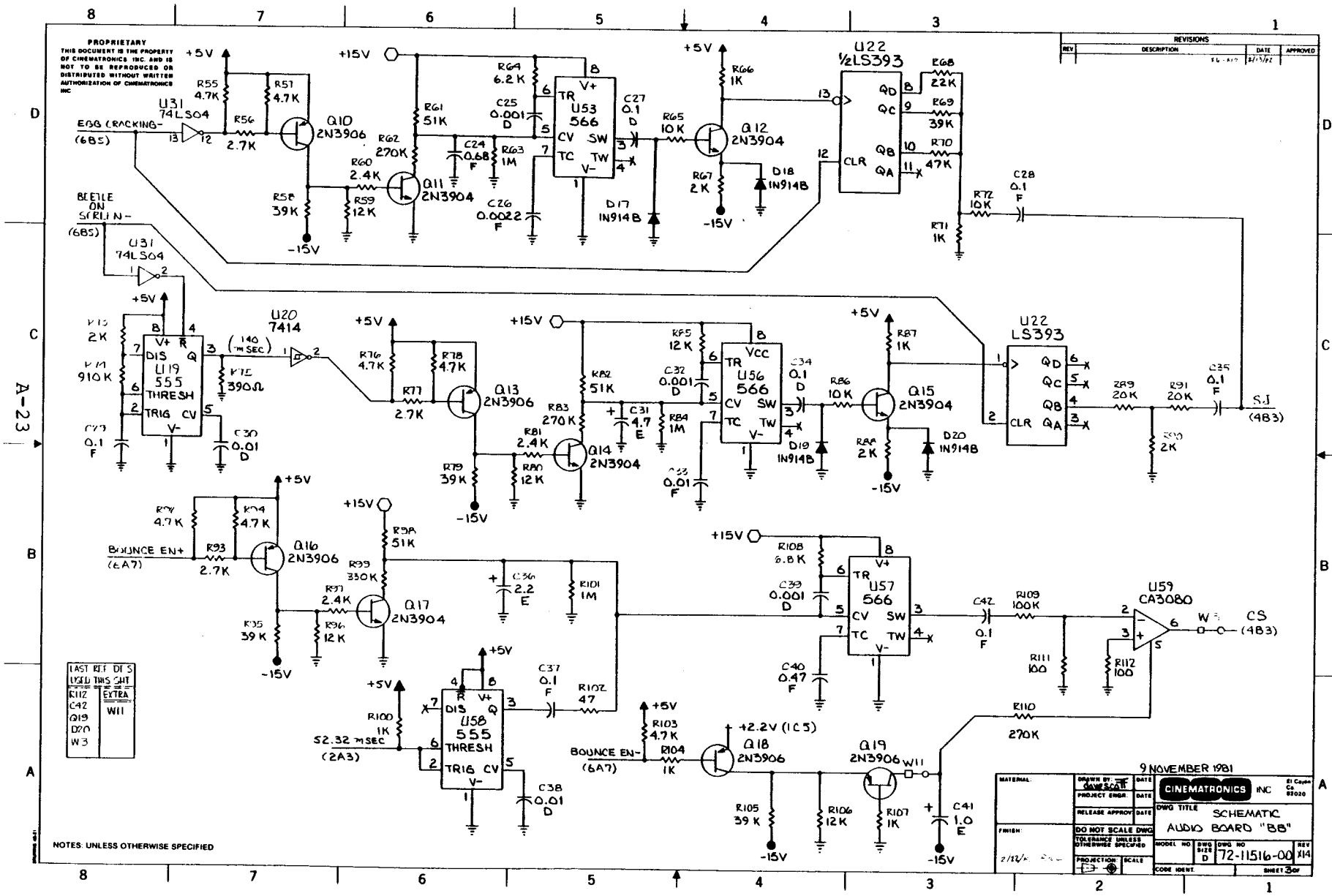
PROPRIETARY
THIS DOCUMENT IS THE PROPERTY OF CINEMATRONICS INC. AND IS NOT TO BE REPRODUCED OR DISTRIBUTED WITHOUT WRITTEN AUTHORIZATION OF CINEMATRONICS INC
REVISIONS
REV DESCRIPTION DATE APPROVED
U31 74LS04
EGG CRACKING- (6B5)
BEETLE ON SCREEN- (6B5)
Q10 2N3906
Q11 2N3904
Q12 2N3904
Q13 2N3906
Q14 2N3904
Q15 2N3904
Q16 2N3906
Q17 2N3904
Q18 2N3906
Q19 2N3906
U53 566
U56 566
U57 566
U58 555 THRESH
U19 555 THRESH
U20 7414
U22 ½LS393
U22 LS393
U59 CA3080
D17 IN914B
D18 IN914B
D19 IN914B
D20 IN914B
+5V
+15V
-15V
+2.2V (IC5)
140 m SEC
52.32 m SEC
BOUNCE EN+ (6A7)
BOUNCE EN- (6A7)
S.J (4B3)
W.S (4B3)
CS (4B3)
LAST REF DES USED THIS SHT
R112 EXTRA
C42
Q19
D20
W3
NOTES: UNLESS OTHERWISE SPECIFIED
9 NOVEMBER 1981
CINEMATRONICS INC
DWG TITLE SCHEMATIC AUDIO BOARD "88"
DWG NO 72-11516-00
REV X14
SHEET 3 OF
A-23

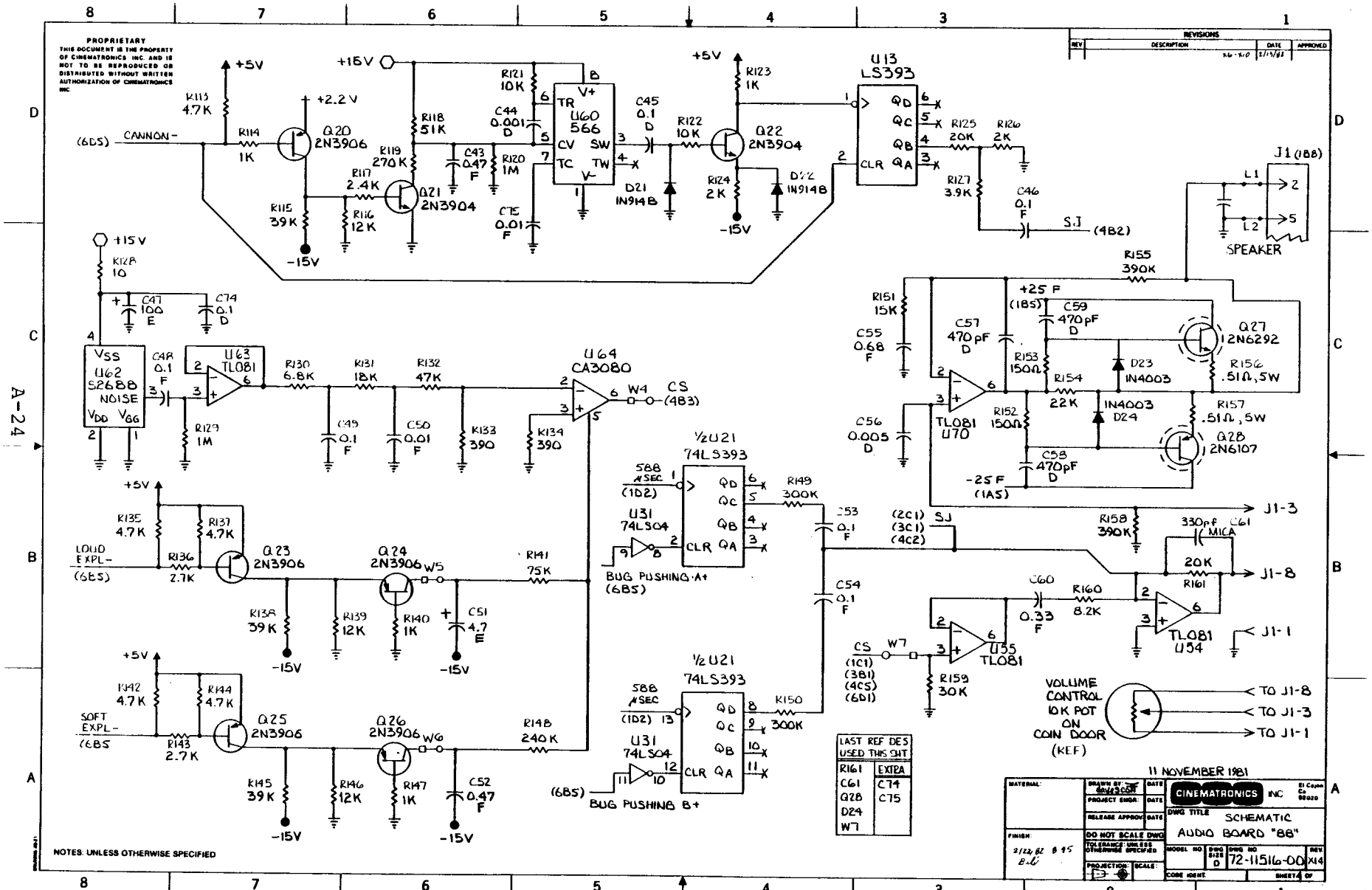
PROPRIETARY
THIS DOCUMENT IS THE PROPERTY OF CINEMATRONICS INC AND IS NOT TO BE REPRODUCED OR DISTRIBUTED WITHOUT WRITTEN AUTHORIZATION OF CINEMATRONICS INC
REVISIONS
REV DESCRIPTION DATE APPROVED
+5V
+15V
+2.2 V
R113 4.7K
R114 1K
Q20 2N3906
CANNON- (6D5)
R115 39K
R116 12K
R117 2.4K
Q21 2N3904
R118 51K
R119 270K
C43 0.47 F
R120 1M
R121 10K
C44 0.001 D
C45 0.1 D
U60 566
TR V+ CV SW TC TW V-
C45 0.01 F
D21 IN914B
R122 10K
Q22 2N3904
R123 1K
R124 2K
D22 IN914B
-15V
U13 LS393
QD QC QB QA CLR
R125 20K
R126 2K
R127 3.9K
C46 0.1 F
SJ (4B2)
J1 (1B8)
L1 L2
SPEAKER
R155 390K
R128 10
C47 100 E
C74 0.1 D
U62 SP688 NOISE
VSS VDD VGG
C48 0.1 F
U63 TL081
R129 1M
R130 6.8K
R131 18K
R132 47K
C49 0.1 F
C50 0.01 F
R133 390
R134 390
U64 CA3080
W4 CS (4B3)
R151 15K
C55 0.68 F
+25 F (1B5)
C57 470 pF D
C59 470 pF D
R153 150Ω
R154 22K
D23 IN4003
D24 IN4003
R152 150Ω
C56 0.005 D
C58 470 pF D
-25 F (1A5)
TL081 U70
Q27 2N6292
R156 .51Ω, 5W
R157 .51Ω, 5W
Q28 2N6107
J1-3
J1-8
J1-1
588 μSEC (1D2)
½U21 74LS393
U31 74LS04
BUG PUSHING A+ (6B5)
R149 300K
C53 0.1 F
C54 0.1 F
(2C1) (3C1) (4C2) SJ
R158 390K
330pF C61 MICA
20K R161
C60 0.33 F
R160 8.2K
TL081 U54
CS (1C1) (3B1) (4C5) (6D1) W7
U55 TL081
R159 30K
LOUD EXPL- (6B5)
R135 4.7K
R136 2.7K
R137 4.7K
Q23 2N3906
Q24 2N3906 W5
R138 39K
R139 12K
R140 1K
R141 75K
C51 4.7 E
SOFT EXPL- (6B5)
R142 4.7K
R143 2.7K
R144 4.7K
Q25 2N3906
Q26 2N3906 W6
R145 39K
R146 12K
R147 1K
R148 240K
C52 0.47 F
R150 300K
BUG PUSHING B+ (6B5)
VOLUME CONTROL 10K POT ON COIN DOOR (KEF)
TO J1-8
TO J1-3
TO J1-1
LAST REF DES USED THIS SHT
R161 C61 Q28 D24 W7
EXTRA C74 C75
NOTES: UNLESS OTHERWISE SPECIFIED
11 NOVEMBER 1981
CINEMATRONICS INC
DWG TITLE SCHEMATIC AUDIO BOARD "88"
DWG NO 72-11516-00
REV X14
SHEET 4 OF
A-24

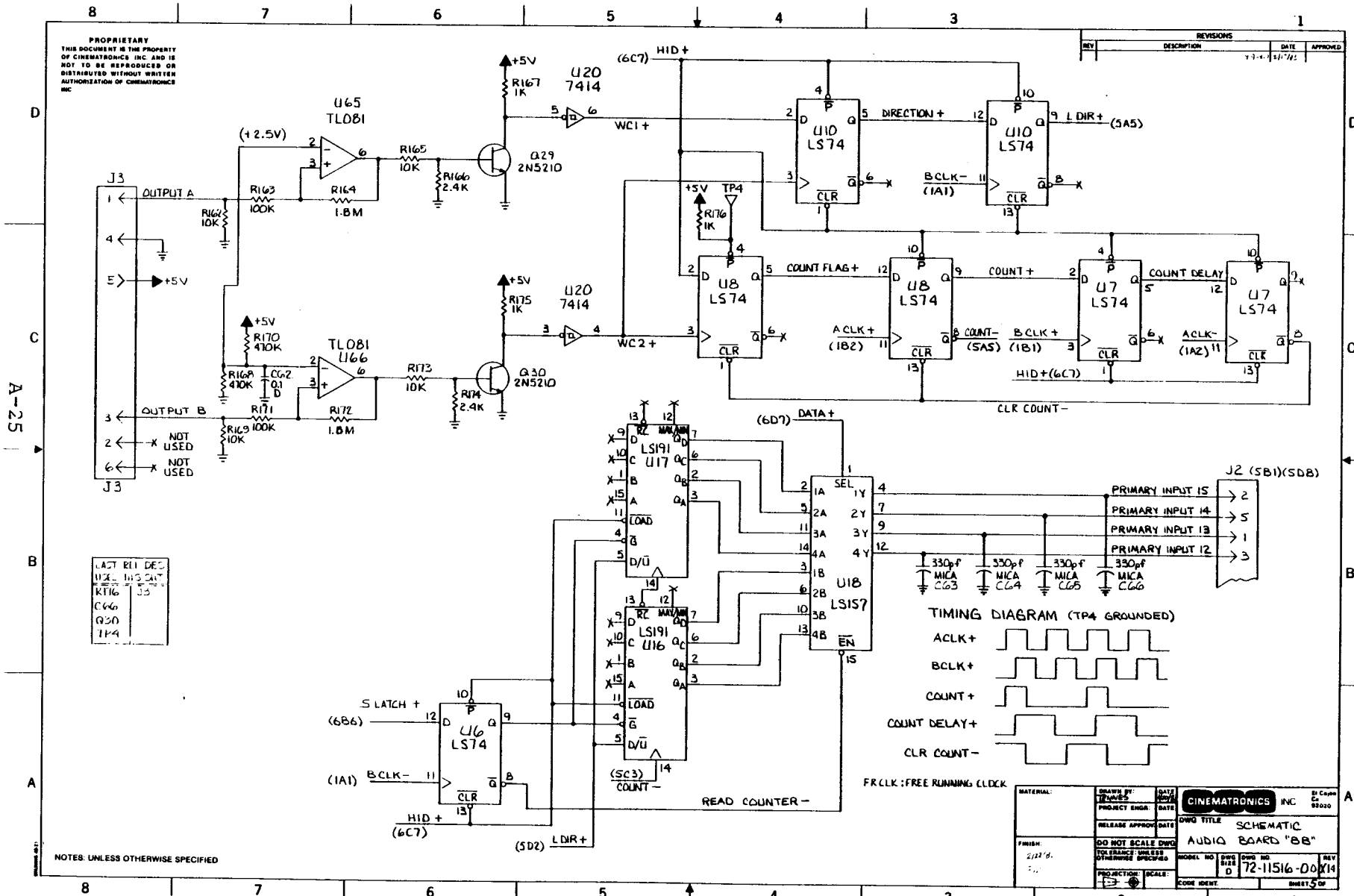
PROPRIETARY
THIS DOCUMENT IS THE PROPERTY OF CINEMATRONICS INC AND IS NOT TO BE REPRODUCED OR DISTRIBUTED WITHOUT WRITTEN AUTHORIZATION OF CINEMATRONICS INC
REVISIONS
REV DESCRIPTION DATE APPROVED
U65 TL081
(+2.5V)
J3
OUTPUT A
OUTPUT B
NOT USED
NOT USED
+5V
R162 10K
R163 100K
R164 1.8M
R165 10K
R166 2.4K
R167 1K
U20 7414
Q29 2N5210
WC1+
U66 TL081
R168 470K
R169 10K
R170 470K
CG2 0.1
R171 100K
R172 1.8M
R173 10K
R174 2.4K
R175 1K
Q30 2N5210
WC2+
(6C7) HID+
R176 1K
TP4
U10 LS74
DIRECTION+
L DIR+ (5A5)
BCLK- (1A1)
U8 LS74
COUNT FLAG+
U7 LS74
COUNT+
COUNT DELAY
ACLK+ (1B2)
COUNT- (5A5)
BCLK+ (1B1)
ACLK- (1A2)
HID+(6C7)
CLR COUNT-
(6D7) DATA+
U17 LS191
U16 LS191
LOAD
D/U
U18 LS157
SEL
EN
J2 (5B1)(5D8)
PRIMARY INPUT 15
PRIMARY INPUT 14
PRIMARY INPUT 13
PRIMARY INPUT 12
330pf MICA CG3
330pf MICA CG4
330pf MICA CG5
330pf MICA CG6
TIMING DIAGRAM (TP4 GROUNDED)
ACLK+
BCLK+
COUNT+
COUNT DELAY+
CLR COUNT-
FRCLK: FREE RUNNING CLOCK
S LATCH+ (6B6)
U6 LS74
(1A1) BCLK-
HID+ (6C7)
(5C3) COUNT-
(5D2) L DIR+
READ COUNTER-
LAST REV DES
USED IN ASSY
RT16 J3
CG6
Q30
TP4
NOTES: UNLESS OTHERWISE SPECIFIED
CINEMATRONICS INC
DWG TITLE SCHEMATIC AUDIO BOARD "BB"
DWG NO 72-11516-00
REV X14
SHEET 5 OF
A-25

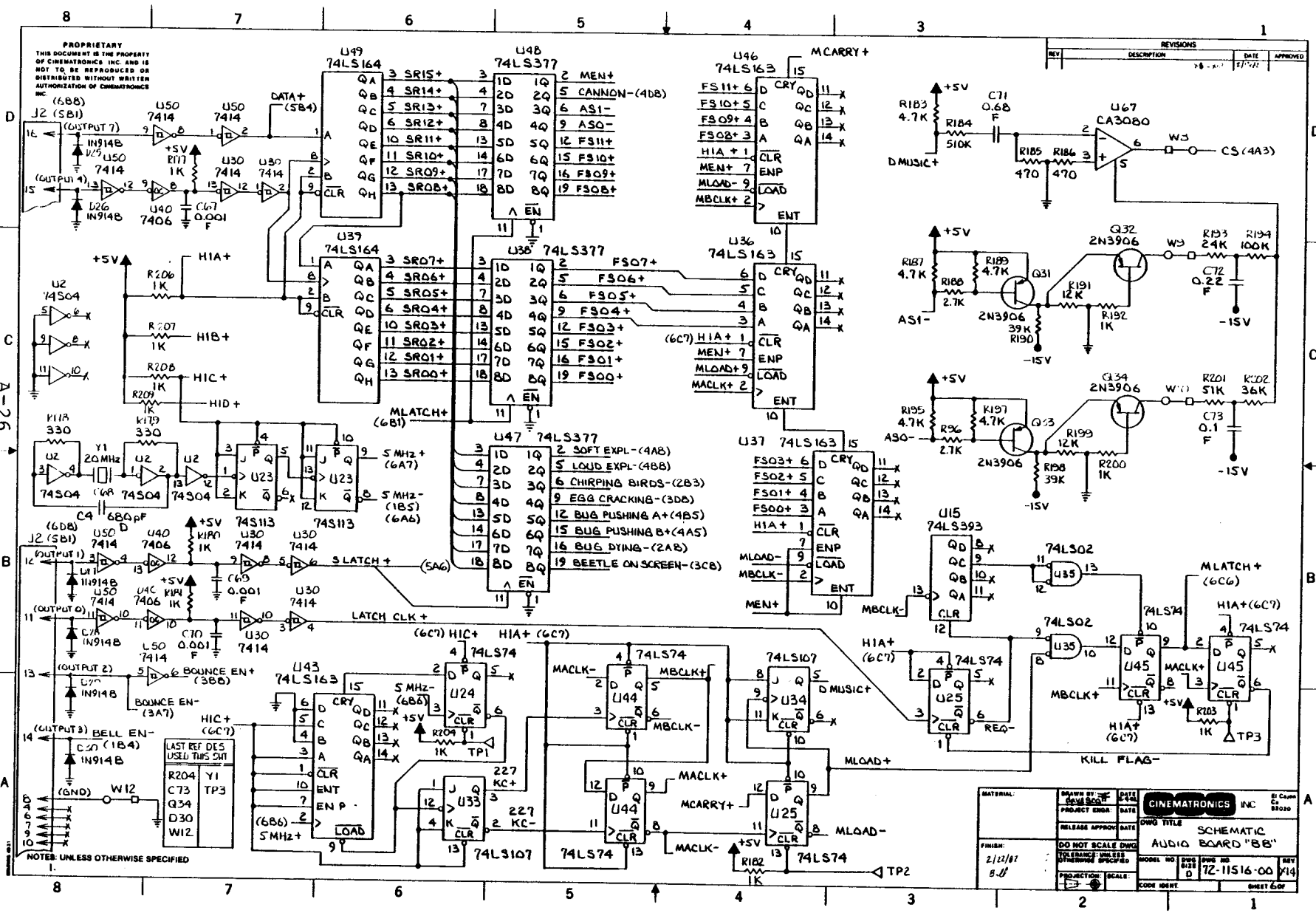
PROPRIETARY
THIS DOCUMENT IS THE PROPERTY OF CINEMATRONICS INC. AND IS NOT TO BE REPRODUCED OR DISTRIBUTED WITHOUT WRITTEN AUTHORIZATION OF CINEMATRONICS INC.
REVISIONS
REV
DESCRIPTION
DATE
APPROVED
U49 74LS164
U48 74LS377
U46 74LS163
U39 74LS164
U38 74LS377
U36 74LS163
U47 74LS377
U37 74LS163
U67 CA3080
U15 74LS393
U43 74LS163
U24 74LS74
U44 74LS74
U25 74LS74
U45 74LS74
U23 74S113
U2 74S04
U50 7414
U40 7406
U30 7414
U35 74LS02
U34 74LS107
U33 74LS107
Q31 2N3906
Q32 2N3906
Q33 2N3906
Q34 2N3906
Y1 20MHz
C4 680pF
MCARRY+
MLATCH+ (6B1)
S LATCH+ (5A6)
LATCH CLK+
BOUNCE EN+ (3B8)
BOUNCE EN- (3A7)
BELL EN- (1B4)
KILL FLAG-
CS (4A3)
DMUSIC+
AS1-
AS0-
MLOAD+
MLOAD-
MACLK+
MACLK-
MBCLK+
MBCLK-
MEN+
MEN+ (6C7)
LAST REF DES USED THIS SHT
R204 Y1
C73 TP3
Q34
D30
W12
NOTES: UNLESS OTHERWISE SPECIFIED
CINEMATRONICS INC
DWG TITLE SCHEMATIC AUDIO BOARD "BB"
DO NOT SCALE DWG
72-11516-00
SHEET 6 OF