ATARI®

CO-256-03

DRAGON'S LAIR*

PRELIMINARY MANUAL

* (c) 1983 Magicom Inc. DRAGON'S LAIR TM owned by Magicom, Inc..
Manufactured under licence from Cinematronics, Inc..

VIDEO DISK PLAYER.

To ensure best quality and reliability the following simple maintenance should be performed at 2 weekly intervals.

BEFORE OPENING THE PLAYER, PLEASE NOTE THE FOLLOWING.

(a) The disk should be handled only by its edges or between the centre hole and one edge. Avoid any contact with the playing surface of the disk.

(b) DO NOT use any form of abrasive cleaner, alcohol or other solvent.

PREVENTIVE MAINTENANCE:-

1/. Open disk player drawer.

2/. Remove filter at rear of drawer.
Shake filter till free of dust.
Replace filter.

3/. Release draw latch on player securing bracket.
Remove securing bracket. (Easiest if drawer is partially in).

4/. With game powered up, press "OPEN" button on front of Player.
Within 10 seconds the lid will open automatically allowing access to the video disk.

5/. When player door is open turn power OFF at switch on rear panel of game cabinet.

6/. Carefully remove the disk and dust it with a clean, lint-free, 100% cotton cloth.
If necessary, the cloth may be dampened slightly with water.
DO NOT use any form of abrasive cleaner, alcohol or other solvent.

7/. With playing surface facing downwards, replace disk and press it gently onto centre spindle.

8/. Close lid of player.

9/. Replace securing bracket.

10/. Gently close and secure drawer.

11/. Turn power ON.

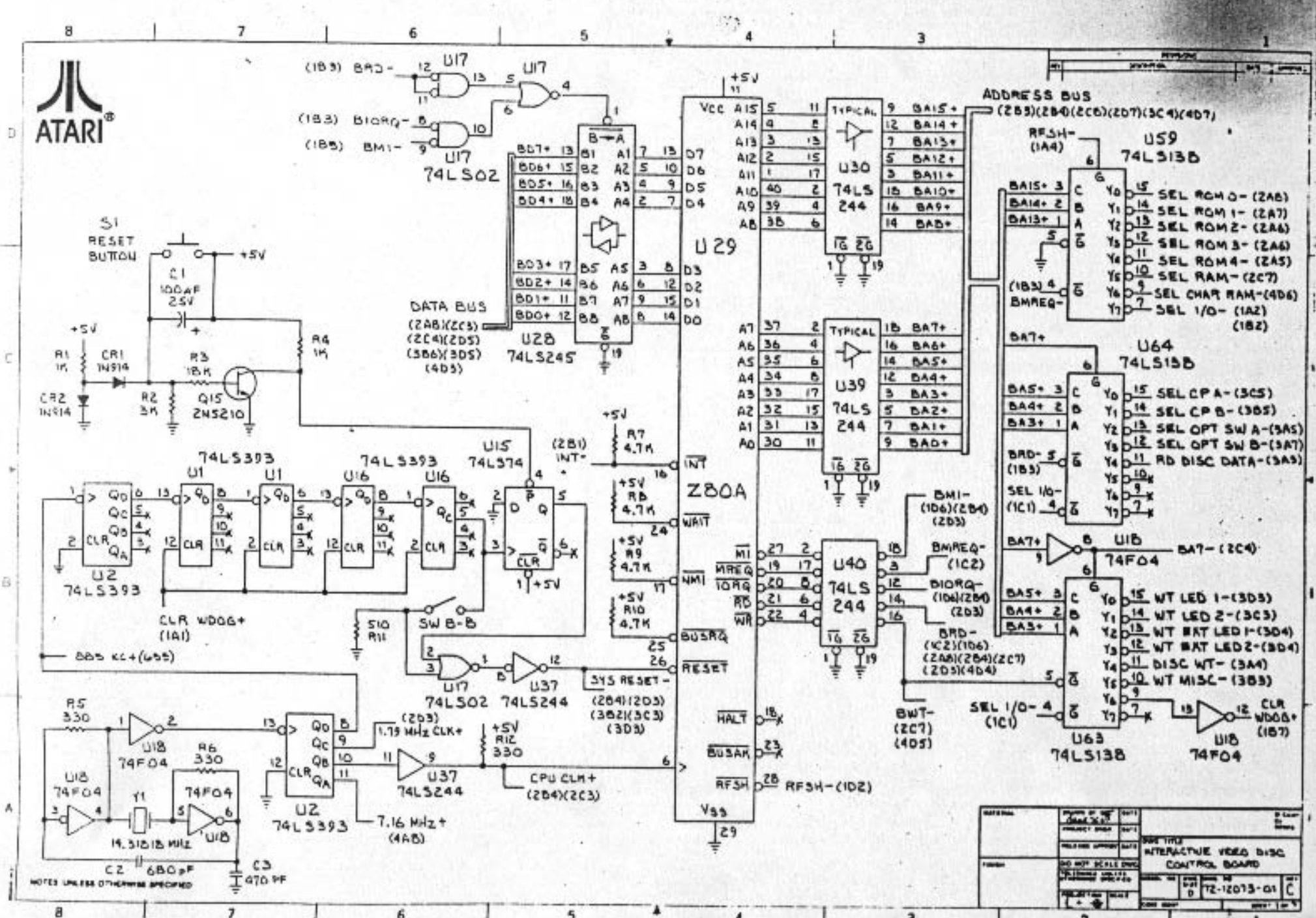
ATARI
U17
74LS02
U28
74LS245
U29
Z80A
U30
74LS 244
U39
74LS 244
U40
74LS 244
U59
74LS138
U64
74LS138
U63
74LS138
U18
74F04
U15
74LS74
U2
74LS393
U37
74LS244
S1
RESET
BUTTON
Q15
2N5210
DATA BUS
ADDRESS BUS
SEL ROM 0- (2A8)
SEL ROM 1- (2A7)
SEL ROM 2- (2A6)
SEL ROM 3- (2A6)
SEL ROM 4- (2A5)
SEL RAM- (2C7)
SEL CHAR RAM-(4D6)
SEL I/O- (1A2) (1B2)
SEL CP A- (3C5)
SEL CP B- (3B5)
SEL OPT SW A-(3A5)
SEL OPT SW B-(3A7)
RD DISC DATA-(3A3)
WT LED 1-(3D3)
WT LED 2-(3C3)
WT EXT LED 1-(3D4)
WT EXT LED 2-(3D4)
DISC WT- (3A4)
WT MISC- (3B3)
CLR WDOG+ (1B7)
CLR WDOG+ (1A1)
SW B-B
SYS RESET-
CPU CLK+ (2B4)(2C3)
7.16 MHz+ (4A8)
14.31818 MHz
NOTES UNLESS OTHERWISE SPECIFIED
INTERACTIVE VIDEO DISC CONTROL BOARD
72-12073-01

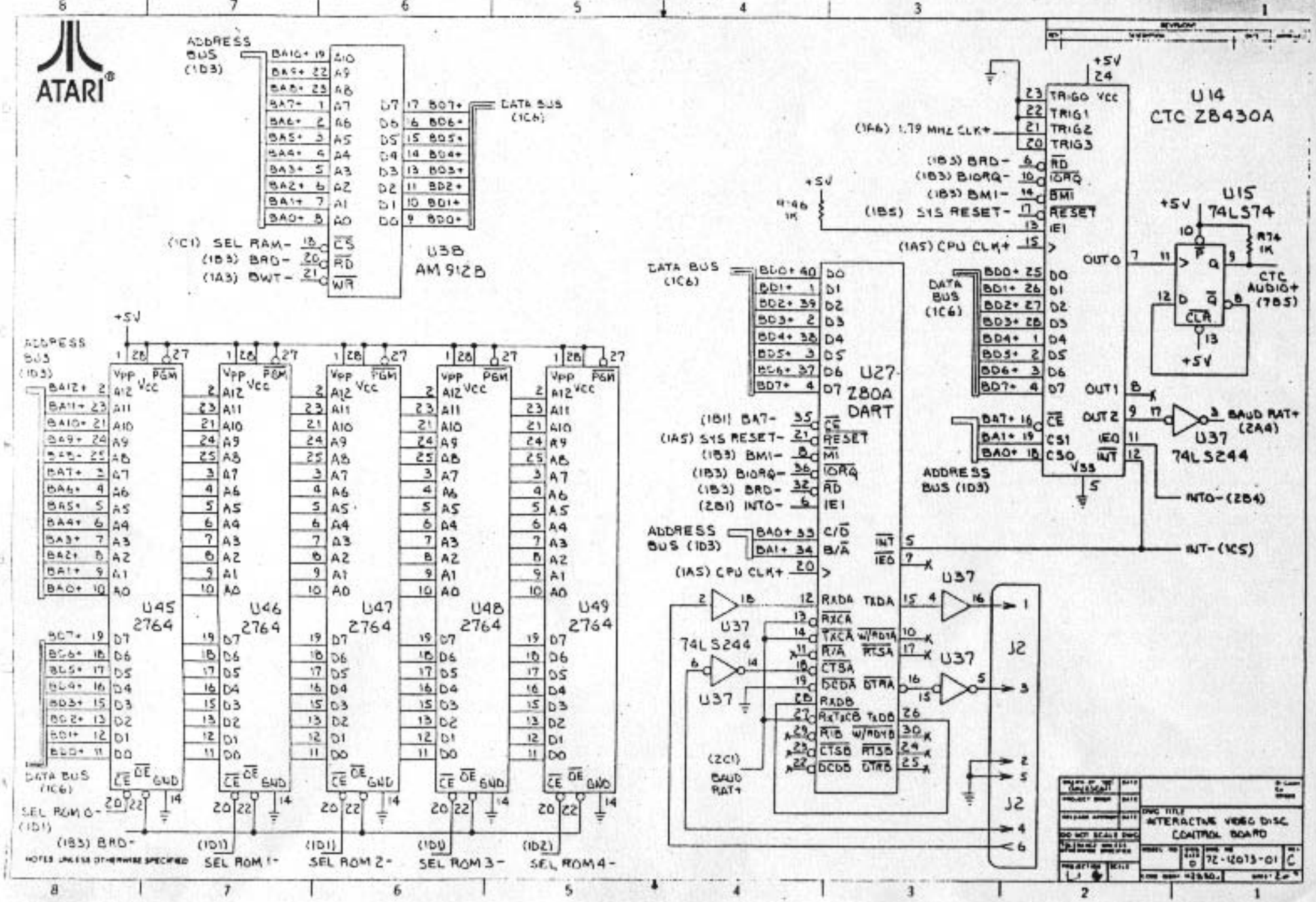
ATARI
ADDRESS BUS (1D3)
U38 AM 9128
(1C1) SEL RAM-
(1B3) BRD-
(1A3) BWT-
DATA BUS (1C6)
U45 2764
U46 2764
U47 2764
U48 2764
U49 2764
+5V
DATA BUS (1C6)
SEL ROM 0- (1D1)
(1B3) BRD-
SEL ROM 1- (1D1)
SEL ROM 2- (1D1)
SEL ROM 3- (1D1)
SEL ROM 4- (1D2)
NOTES UNLESS OTHERWISE SPECIFIED
U14 CTC Z8430A
(1A6) 1.79 MHz CLK+
(1B3) BRD-
(1B3) BIORQ-
(1B3) BMI-
(1B5) SYS RESET-
(1A5) CPU CLK+
U15 74LS74
CTC AUDIO+ (7B5)
U27 Z80A DART
(1B1) BAT-
(1A5) SYS RESET-
(1B3) BMI-
(1B3) BIORQ-
(1B3) BRD-
(2B1) INTO-
ADDRESS BUS (1D3)
(1A5) CPU CLK+
U37 74LS244
BAUD RAT+ (2A4)
INTO-(2B4)
INT-(1C5)
(2C1) BAUD RAT+
J2
DWG TITLE
INTERACTIVE VIDEO DISC CONTROL BOARD
72-12013-01
C

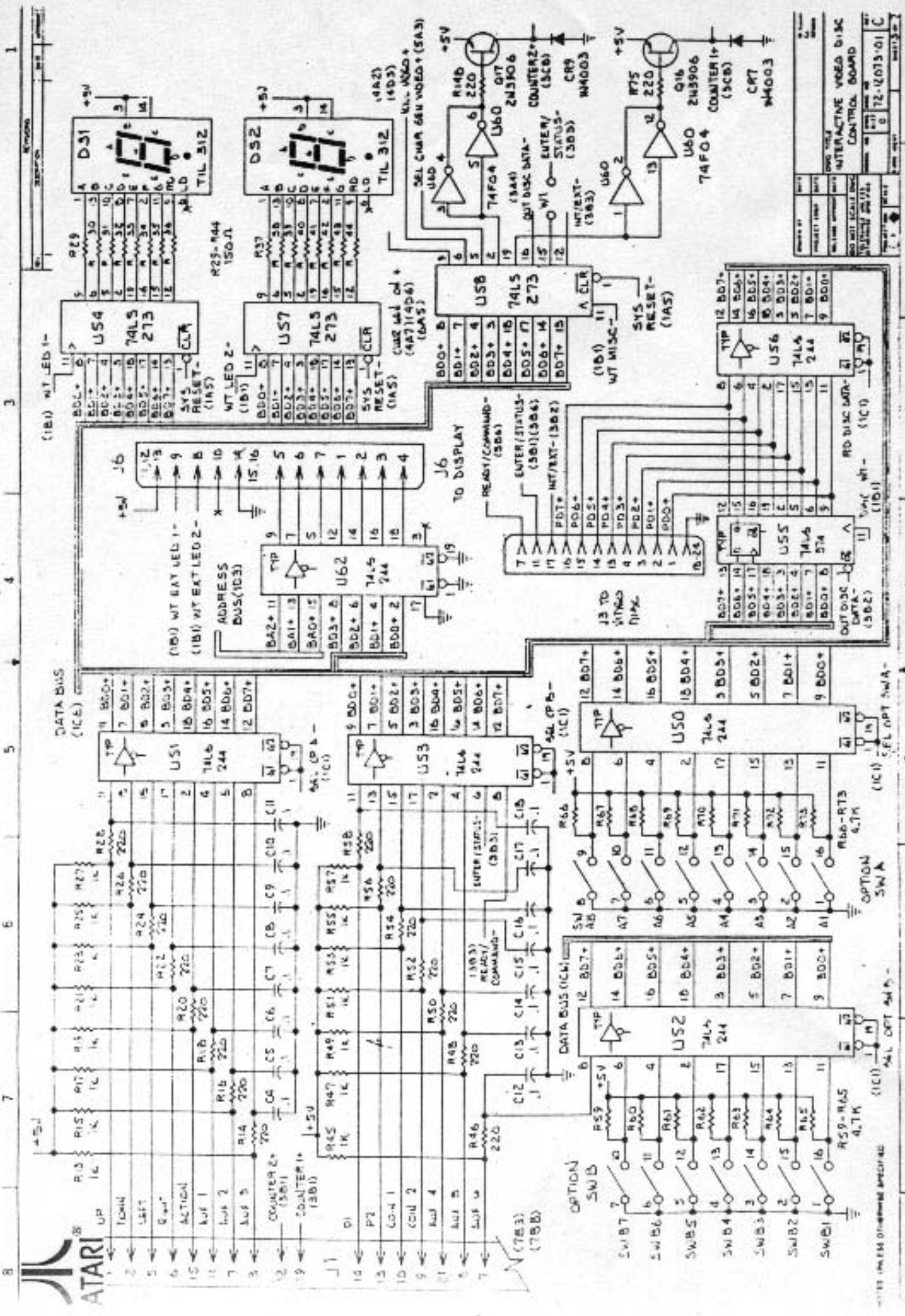
ATARI
INTERACTIVE VIDEO DISC CONTROL BOARD
DATA BUS
ADDRESS BUS
J6 TO DISPLAY
OPTION SW A
OPTION SW B
DS1
DS2
TIL 312
U50
U51
U52
U53
U54
U55
U56
U57
U58
U60
74LS 273
74LS 244
74F04
2N3906
CR9 1N4003
CR7 1N4003
SYS RESET
WT LED 1
WT LED 2
ENTER/STATUS
READY/COMMAND
OUT DISC DATA
RD DISC DATA
SEL OPT SW A
SEL OPT SW B
COUNTER 1
COUNTER 2
SEL CHAR GEN VIDEO
J1
J3 TO VIDEO DISC

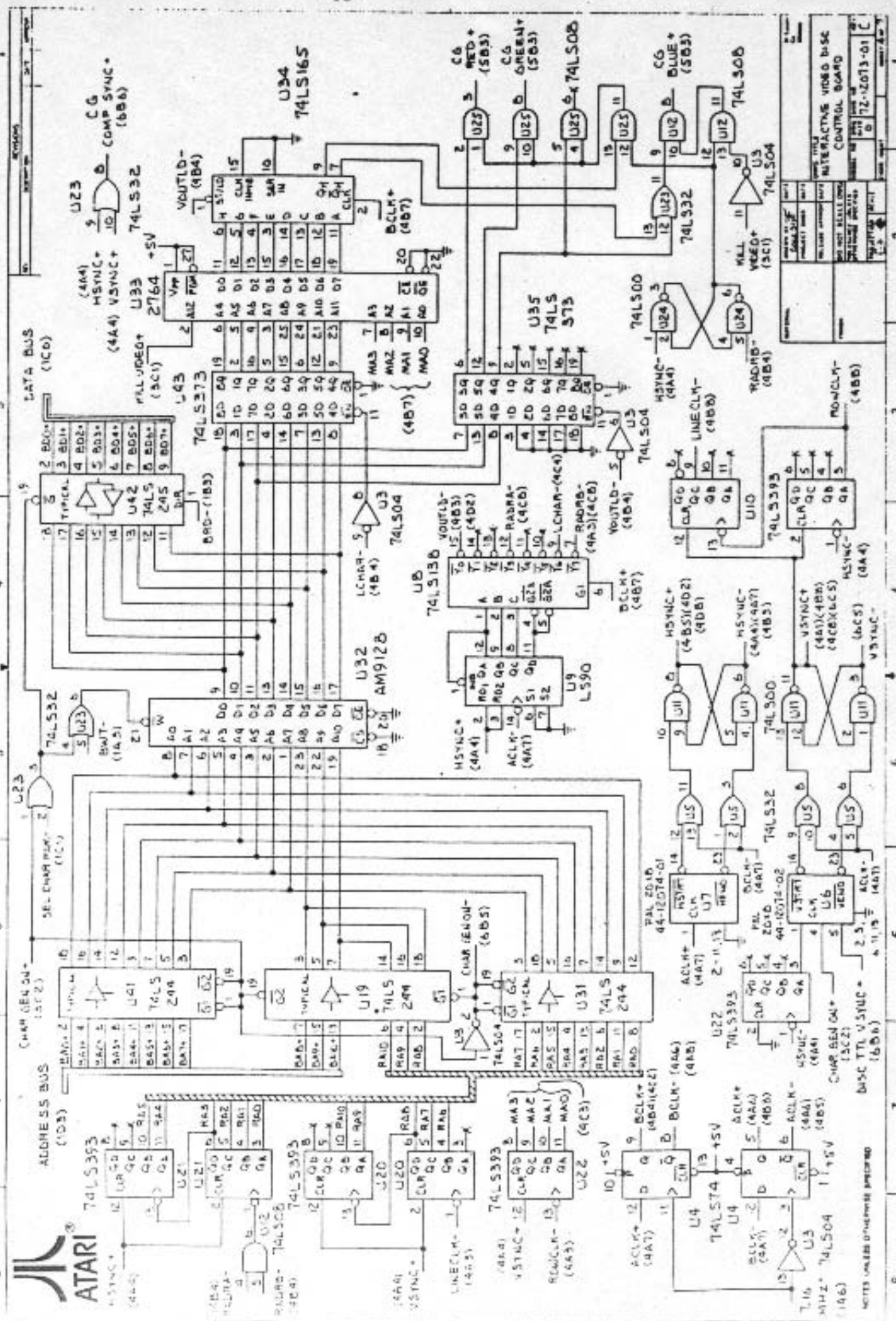
ATARI
INTERACTIVE VIDEO DISC CONTROL BOARD
DATA BUS (1C0)
ADDRESS BUS (1D3)
U34 74LS165
U35 74LS373
U43 74LS373
U42 74LS 245
U33 2764 +5V
U32 AM9128
U8 74LS138
U9 LS90
U10 74LS393
U11 74LS00
U12 74LS08
U13 74LS32
U14 74LS04
U15 74LS86
U16 74LS74
U17 74LS393
U18 74LS393
U19 74LS 244
U20 74LS393
U21 74LS393
U22 74LS393
U23 74LS32
U24 74LS00
U25 74LS08
U26 74LS86
U27 74LS74
U28 74LS393
U29 74LS393
U30 74LS 244
U31 74LS 244
U41 74LS 244
U42 74LS 245
U43 74LS373
U44 74LS393
U45 74LS393
U46 74LS393
U47 74LS393
U48 74LS393
U49 74LS393
U50 74LS393
U51 74LS393
U52 74LS393
U53 74LS393
U54 74LS393
U55 74LS393
U56 74LS393
U57 74LS393
U58 74LS393
U59 74LS393
U60 74LS393
U61 74LS393
U62 74LS393
U63 74LS393
U64 74LS393
U65 74LS393
U66 74LS393
U67 74LS393
U68 74LS393
U69 74LS393
U70 74LS393
U71 74LS393
U72 74LS393
U73 74LS393
U74 74LS393
U75 74LS393
U76 74LS393
U77 74LS393
U78 74LS393
U79 74LS393
U80 74LS393
U81 74LS393
U82 74LS393
U83 74LS393
U84 74LS393
U85 74LS393
U86 74LS393
U87 74LS393
U88 74LS393
U89 74LS393
U90 74LS393
U91 74LS393
U92 74LS393
U93 74LS393
U94 74LS393
U95 74LS393
U96 74LS393
U97 74LS393
U98 74LS393
U99 74LS393
U100 74LS393
U101 74LS393
U102 74LS393
U103 74LS393
U104 74LS393
U105 74LS393
U106 74LS393
U107 74LS393
U108 74LS393
U109 74LS393
U110 74LS393
U111 74LS393
U112 74LS393
U113 74LS393
U114 74LS393
U115 74LS393
U116 74LS393
U117 74LS393
U118 74LS393
U119 74LS393
U120 74LS393
U121 74LS393
U122 74LS393
U123 74LS393
U124 74LS393
U125 74LS393
U126 74LS393
U127 74LS393
U128 74LS393
U129 74LS393
U130 74LS393
U131 74LS393
U132 74LS393
U133 74LS393
U134 74LS393
U135 74LS393
U136 74LS393
U137 74LS393
U138 74LS393
U139 74LS393
U140 74LS393
U141 74LS393
U142 74LS393
U143 74LS393
U144 74LS393
U145 74LS393
U146 74LS393
U147 74LS393
U148 74LS393
U149 74LS393
U150 74LS393
U151 74LS393
U152 74LS393
U153 74LS393
U154 74LS393
U155 74LS393
U156 74LS393
U157 74LS393
U158 74LS393
U159 74LS393
U160 74LS393
U161 74LS393
U162 74LS393
U163 74LS393
U164 74LS393
U165 74LS393
U166 74LS393
U167 74LS393
U168 74LS393
U169 74LS393
U170 74LS393
U171 74LS393
U172 74LS393
U173 74LS393
U174 74LS393
U175 74LS393
U176 74LS393
U177 74LS393
U178 74LS393
U179 74LS393
U180 74LS393
U181 74LS393
U182 74LS393
U183 74LS393
U184 74LS393
U185 74LS393
U186 74LS393
U187 74LS393
U188 74LS393
U189 74LS393
U190 74LS393
U191 74LS393
U192 74LS393
U193 74LS393
U194 74LS393
U195 74LS393
U196 74LS393
U197 74LS393
U198 74LS393
U199 74LS393
U200 74LS393
U201 74LS393
U202 74LS393
U203 74LS393
U204 74LS393
U205 74LS393
U206 74LS393
U207 74LS393
U208 74LS393
U209 74LS393
U210 74LS393
U211 74LS393
U212 74LS393
U213 74LS393
U214 74LS393
U215 74LS393
U216 74LS393
U217 74LS393
U218 74LS393
U219 74LS393
U220 74LS393
U221 74LS393
U222 74LS393
U223 74LS393
U224 74LS393
U225 74LS393
U226 74LS393
U227 74LS393
U228 74LS393
U229 74LS393
U230 74LS393
U231 74LS393
U232 74LS393
U233 74LS393
U234 74LS393
U235 74LS393
U236 74LS393
U237 74LS393
U238 74LS393
U239 74LS393
U240 74LS393
U241 74LS393
U242 74LS393
U243 74LS393
U244 74LS393
U245 74LS393
U246 74LS393
U247 74LS393
U248 74LS393
U249 74LS393
U250 74LS393
U251 74LS393
U252 74LS393
U253 74LS393
U254 74LS393
U255 74LS393
U256 74LS393
U257 74LS393
U258 74LS393
U259 74LS393
U260 74LS393
U261 74LS393
U262 74LS393
U263 74LS393
U264 74LS393
U265 74LS393
U266 74LS393
U267 74LS393
U268 74LS393
U269 74LS393
U270 74LS393
U271 74LS393
U272 74LS393
U273 74LS393
U274 74LS393
U275 74LS393
U276 74LS393
U277 74LS393
U278 74LS393
U279 74LS393
U280 74LS393
U281 74LS393
U282 74LS393
U283 74LS393
U284 74LS393
U285 74LS393
U286 74LS393
U287 74LS393
U288 74LS393
U289 74LS393
U290 74LS393
U291 74LS393
U292 74LS393
U293 74LS393
U294 74LS393
U295 74LS393
U296 74LS393
U297 74LS393
U298 74LS393
U299 74LS393
U300 74LS393
U301 74LS393
U302 74LS393
U303 74LS393
U304 74LS393
U305 74LS393
U306 74LS393
U307 74LS393
U308 74LS393
U309 74LS393
U310 74LS393
U311 74LS393
U312 74LS393
U313 74LS393
U314 74LS393
U315 74LS393
U316 74LS393
U317 74LS393
U318 74LS393
U319 74LS393
U320 74LS393
U321 74LS393
U322 74LS393
U323 74LS393
U324 74LS393
U325 74LS393
U326 74LS393
U327 74LS393
U328 74LS393
U329 74LS393
U330 74LS393
U331 74LS393
U332 74LS393
U333 74LS393
U334 74LS393
U335 74LS393
U336 74LS393
U337 74LS393
U338 74LS393
U339 74LS393
U340 74LS393
U341 74LS393
U342 74LS393
U343 74LS393
U344 74LS393
U345 74LS393
U346 74LS393
U347 74LS393
U348 74LS393
U349 74LS393
U350 74LS393
U351 74LS393
U352 74LS393
U353 74LS393
U354 74LS393
U355 74LS393
U356 74LS393
U357 74LS393
U358 74LS393
U359 74LS393
U360 74LS393
U361 74LS393
U362 74LS393
U363 74LS393
U364 74LS393
U365 74LS393
U366 74LS393
U367 74LS393
U368 74LS393
U369 74LS393
U370 74LS393
U371 74LS393
U372 74LS393
U373 74LS393
U374 74LS393
U375 74LS393
U376 74LS393
U377 74LS393
U378 74LS393
U379 74LS393
U380 74LS393
U381 74LS393
U382 74LS393
U383 74LS393
U384 74LS393
U385 74LS393
U386 74LS393
U387 74LS393
U388 74LS393
U389 74LS393
U390 74LS393
U391 74LS393
U392 74LS393
U393 74LS393
U394 74LS393
U395 74LS393
U396 74LS393
U397 74LS393
U398 74LS393
U399 74LS393
U400 74LS393
U401 74LS393
U402 74LS393
U403 74LS393
U404 74LS393
U405 74LS393
U406 74LS393
U407 74LS393
U408 74LS393
U409 74LS393
U410 74LS393
U411 74LS393
U412 74LS393
U413 74LS393
U414 74LS393
U415 74LS393
U416 74LS393
U417 74LS393
U418 74LS393
U419 74LS393
U420 74LS393
U421 74LS393
U422 74LS393
U423 74LS393
U424 74LS393
U425 74LS393
U426 74LS393
U427 74LS393
U428 74LS393
U429 74LS393
U430 74LS393
U431 74LS393
U432 74LS393
U433 74LS393
U434 74LS393
U435 74LS393
U436 74LS393
U437 74LS393
U438 74LS393
U439 74LS393
U440 74LS393
U441 74LS393
U442 74LS393
U443 74LS393
U444 74LS393
U445 74LS393
U446 74LS393
U447 74LS393
U448 74LS393
U449 74LS393
U450 74LS393
U451 74LS393
U452 74LS393
U453 74LS393
U454 74LS393
U455 74LS393
U456 74LS393
U457 74LS393
U458 74LS393
U459 74LS393
U460 74LS393
U461 74LS393
U462 74LS393
U463 74LS393
U464 74LS393
U465 74LS393
U466 74LS393
U467 74LS393
U468 74LS393
U469 74LS393
U470 74LS393
U471 74LS393
U472 74LS393
U473 74LS393
U474 74LS393
U475 74LS393
U476 74LS393
U477 74LS393
U478 74LS393
U479 74LS393
U480 74LS393
U481 74LS393
U482 74LS393
U483 74LS393
U484 74LS393
U485 74LS393
U486 74LS393
U487 74LS393
U488 74LS393
U489 74LS393
U490 74LS393
U491 74LS393
U492 74LS393
U493 74LS393
U494 74LS393
U495 74LS393
U496 74LS393
U497 74LS393
U498 74LS393
U499 74LS393
U500 74LS393
U501 74LS393
U502 74LS393
U503 74LS393
U504 74LS393
U505 74LS393
U506 74LS393
U507 74LS393
U508 74LS393
U509 74LS393
U510 74LS393
U511 74LS393
U512 74LS393
U513 74LS393
U514 74LS393
U515 74LS393
U516 74LS393
U517 74LS393
U518 74LS393
U519 74LS393
U520 74LS393
U521 74LS393
U522 74LS393
U523 74LS393
U524 74LS393
U525 74LS393
U526 74LS393
U527 74LS393
U528 74LS393
U529 74LS393
U530 74LS393
U531 74LS393
U532 74LS393
U533 74LS393
U534 74LS393
U535 74LS393
U536 74LS393
U537 74LS393
U538 74LS393
U539 74LS393
U540 74LS393
U541 74LS393
U542 74LS393
U543 74LS393
U544 74LS393
U545 74LS393
U546 74LS393
U547 74LS393
U548 74LS393
U549 74LS393
U550 74LS393
U551 74LS393
U552 74LS393
U553 74LS393
U554 74LS393
U555 74LS393
U556 74LS393
U557 74LS393
U558 74LS393
U559 74LS393
U560 74LS393
U561 74LS393
U562 74LS393
U563 74LS393
U564 74LS393
U565 74LS393
U566 74LS393
U567 74LS393
U568 74LS393
U569 74LS393
U570 74LS393
U571 74LS393
U572 74LS393
U573 74LS393
U574 74LS393
U575 74LS393
U576 74LS393
U577 74LS393
U578 74LS393
U579 74LS393
U580 74LS393
U581 74LS393
U582 74LS393
U583 74LS393
U584 74LS393
U585 74LS393
U586 74LS393
U587 74LS393
U588 74LS393
U589 74LS393
U590 74LS393
U591 74LS393
U592 74LS393
U593 74LS393
U594 74LS393
U595 74LS393
U596 74LS393
U597 74LS393
U598 74LS393
U599 74LS393
U600 74LS393
U601 74LS393
U602 74LS393
U603 74LS393
U604 74LS393
U605 74LS393
U606 74LS393
U607 74LS393
U608 74LS393
U609 74LS393
U610 74LS393
U611 74LS393
U612 74LS393
U613 74LS393
U614 74LS393
U615 74LS393
U616 74LS393
U617 74LS393
U618 74LS393
U619 74LS393
U620 74LS393
U621 74LS393
U622 74LS393
U623 74LS393
U624 74LS393
U625 74LS393
U626 74LS393
U627 74LS393
U628 74LS393
U629 74LS393
U630 74LS393
U631 74LS393
U632 74LS393
U633 74LS393
U634 74LS393
U635 74LS393
U636 74LS393
U637 74LS393
U638 74LS393
U639 74LS393
U640 74LS393
U641 74LS393
U642 74LS393
U643 74LS393
U644 74LS393
U645 74LS393
U646 74LS393
U647 74LS393
U648 74LS393
U649 74LS393
U650 74LS393
U651 74LS393
U652 74LS393
U653 74LS393
U654 74LS393
U655 74LS393
U656 74LS393
U657 74LS393
U658 74LS393
U659 74LS393
U660 74LS393
U661 74LS393
U662 74LS393
U663 74LS393
U664 74LS393
U665 74LS393
U666 74LS393
U667 74LS393
U668 74LS393
U669 74LS393
U670 74LS393
U671 74LS393
U672 74LS393
U673 74LS393
U674 74LS393
U675 74LS393
U676 74LS393
U677 74LS393
U678 74LS393
U679 74LS393
U680 74LS393
U681 74LS393
U682 74LS393
U683 74LS393
U684 74LS393
U685 74LS393
U686 74LS393
U687 74LS393
U688 74LS393
U689 74LS393
U690 74LS393
U691 74LS393
U692 74LS393
U693 74LS393
U694 74LS393
U695 74LS393
U696 74LS393
U697 74LS393
U698 74LS393
U699 74LS393
U700 74LS393
U701 74LS393
U702 74LS393
U703 74LS393
U704 74LS393
U705 74LS393
U706 74LS393
U707 74LS393
U708 74LS393
U709 74LS393
U710 74LS393
U711 74LS393
U712 74LS393
U713 74LS393
U714 74LS393
U715 74LS393
U716 74LS393
U717 74LS393
U718 74LS393
U719 74LS393
U720 74LS393
U721 74LS393
U722 74LS393
U723 74LS393
U724 74LS393
U725 74LS393
U726 74LS393
U727 74LS393
U728 74LS393
U729 74LS393
U730 74LS393
U731 74LS393
U732 74LS393
U733 74LS393
U734 74LS393
U735 74LS393
U736 74LS393
U737 74LS393
U738 74LS393
U739 74LS393
U740 74LS393
U741 74LS393
U742 74LS393
U743 74LS393
U744 74LS393
U745 74LS393
U746 74LS393
U747 74LS393
U748 74LS393
U749 74LS393
U750 74LS393
U751 74LS393
U752 74LS393
U753 74LS393
U754 74LS393
U755 74LS393
U756 74LS393
U757 74LS393
U758 74LS393
U759 74LS393
U760 74LS393
U761 74LS393
U762 74LS393
U763 74LS393
U764 74LS393
U765 74LS393
U766 74LS393
U767 74LS393
U768 74LS393
U769 74LS393
U770 74LS393
U771 74LS393
U772 74LS393
U773 74LS393
U774 74LS393
U775 74LS393
U776 74LS393
U777 74LS393
U778 74LS393
U779 74LS393
U780 74LS393
U781 74LS393
U782 74LS393
U783 74LS393
U784 74LS393
U785 74LS393
U786 74LS393
U787 74LS393
U788 74LS393
U789 74LS393
U790 74LS393
U791 74LS393
U792 74LS393
U793 74LS393
U794 74LS393
U795 74LS393
U796 74LS393
U797 74LS393
U798 74LS393
U799 74LS393
U800 74LS393
U801 74LS393
U802 74LS393
U803 74LS393
U804 74LS393
U805 74LS393
U806 74LS393
U807 74LS393
U808 74LS393
U809 74LS393
U810 74LS393
U811 74LS393
U812 74LS393
U813 74LS393
U814 74LS393
U815 74LS393
U816 74LS393
U817 74LS393
U818 74LS393
U819 74LS393
U820 74LS393
U821 74LS393
U822 74LS393
U823 74LS393
U824 74LS393
U825 74LS393
U826 74LS393
U827 74LS393
U828 74LS393
U829 74LS393
U830 74LS393
U831 74LS393
U832 74LS393
U833 74LS393
U834 74LS393
U835 74LS393
U836 74LS393
U837 74LS393
U838 74LS393
U839 74LS393
U840 74LS393
U841 74LS393
U842 74LS393
U843 74LS393
U844 74LS393
U845 74LS393
U846 74LS393
U847 74LS393
U848 74LS393
U849 74LS393
U850 74LS393
U851 74LS393
U852 74LS393
U853 74LS393
U854 74LS393
U855 74LS393
U856 74LS393
U857 74LS393
U858 74LS393
U859 74LS393
U860 74LS393
U861 74LS393
U862 74LS393
U863 74LS393
U864 74LS393
U865 74LS393
U866 74LS393
U867 74LS393
U868 74LS393
U869 74LS393
U870 74LS393
U871 74LS393
U872 74LS393
U873 74LS393
U874 74LS393
U875 74LS393
U876 74LS393
U877 74LS393
U878 74LS393
U879 74LS393
U880 74LS393
U881 74LS393
U882 74LS393
U883 74LS393
U884 74LS393
U885 74LS393
U886 74LS393
U887 74LS393
U888 74LS393
U889 74LS393
U890 74LS393
U891 74LS393
U892 74LS393
U893 74LS393
U894 74LS393
U895 74LS393
U896 74LS393
U897 74LS393
U898 74LS393
U899 74LS393
U900 74LS393
U901 74LS393
U902 74LS393
U903 74LS393
U904 74LS393
U905 74LS393
U906 74LS393
U907 74LS393
U908 74LS393
U909 74LS393
U910 74LS393
U911 74LS393
U912 74LS393
U913 74LS393
U914 74LS393
U915 74LS393
U916 74LS393
U917 74LS393
U918 74LS393
U919 74LS393
U920 74LS393
U921 74LS393
U922 74LS393
U923 74LS393
U924 74LS393
U925 74LS393
U926 74LS393
U927 74LS393
U928 74LS393
U929 74LS393
U930 74LS393
U931 74LS393
U932 74LS393
U933 74LS393
U934 74LS393
U935 74LS393
U936 74LS393
U937 74LS393
U938 74LS393
U939 74LS393
U940 74LS393
U941 74LS393
U942 74LS393
U943 74LS393
U944 74LS393
U945 74LS393
U946 74LS393
U947 74LS393
U948 74LS393
U949 74LS393
U950 74LS393
U951 74LS393
U952 74LS393
U953 74LS393
U954 74LS393
U955 74LS393
U956 74LS393
U957 74LS393
U958 74LS393
U959 74LS393
U960 74LS393
U961 74LS393
U962 74LS393
U963 74LS393
U964 74LS393
U965 74LS393
U966 74LS393
U967 74LS393
U968 74LS393
U969 74LS393
U970 74LS393
U971 74LS393
U972 74LS393
U973 74LS393
U974 74LS393
U975 74LS393
U976 74LS393
U977 74LS393
U978 74LS393
U979 74LS393
U980 74LS393
U981 74LS393
U982 74LS393
U983 74LS393
U984 74LS393
U985 74LS393
U986 74LS393
U987 74LS393
U988 74LS393
U989 74LS393
U990 74LS393
U991 74LS393
U992 74LS393
U993 74LS393
U994 74LS393
U995 74LS393
U996 74LS393
U997 74LS393
U998 74LS393
U999 74LS393
U1000 74LS393

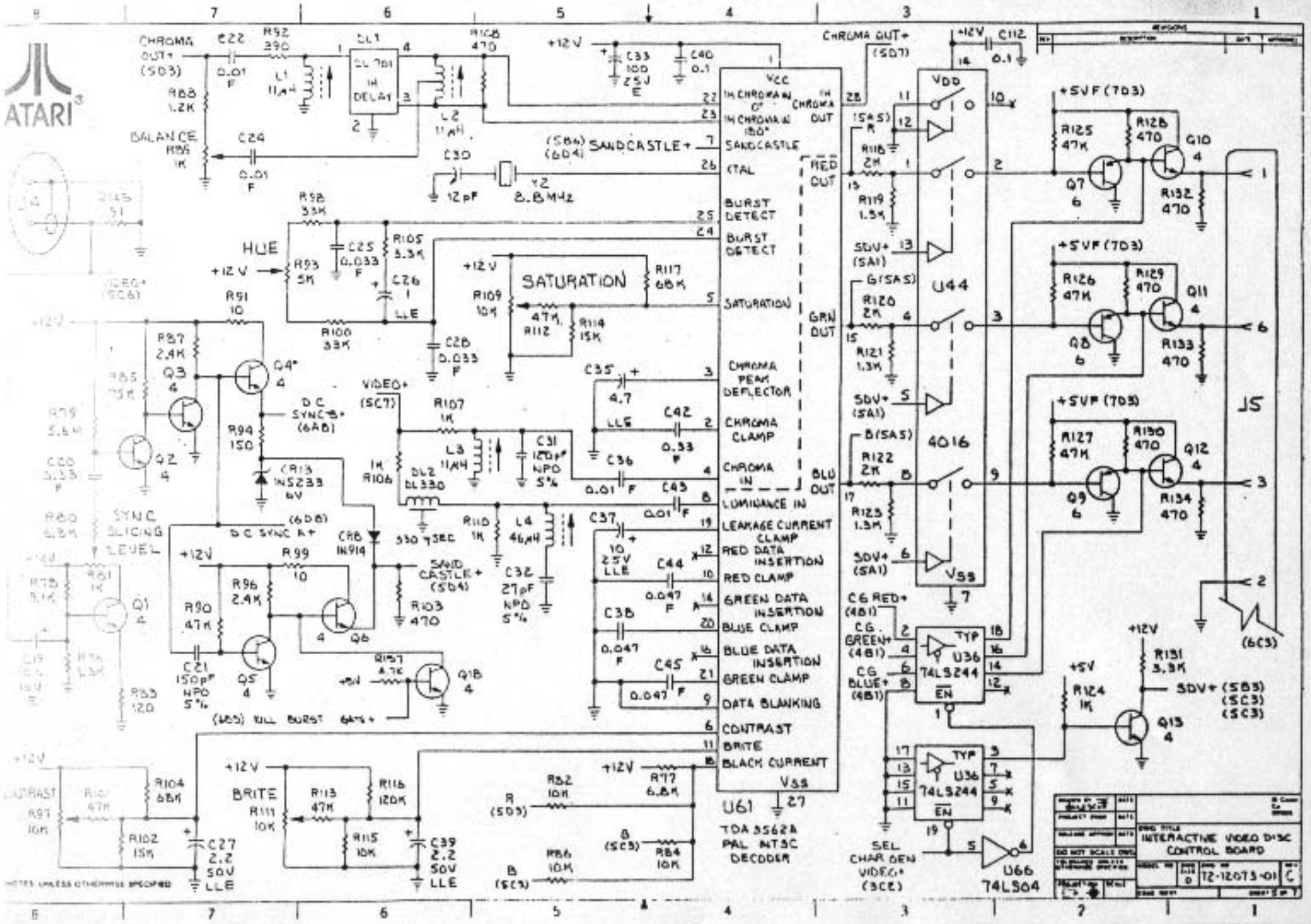
ATARI
CHROMA OUT+ (5D3)
BALANCE
HUE
SATURATION
VIDEO+ (5C7)
D C SYNC B+ (6A8)
D C SYNC A+ (6D8)
SYNC SLICING LEVEL
SAND CASTLE+ (5D4)
(6B5) KILL BURST GATE+
CONTRAST
BRITE
CHROMA OUT+ (5D7)
SAND CASTLE+ (5B6) (6D4)
RED OUT
GRN OUT
BLU OUT
VDD
VSS
U44
4016
U61
TDA 3562A PAL NTSC DECODER
U36 74LS244
U66 74LS04
SEL CHAR GEN VIDEO+ (3C2)
+5VF (7D3)
J5
(6C3)
SDV+ (5B3) (5C3) (5C3)
INTERACTIVE VIDEO DISC CONTROL BOARD
DO NOT SCALE DWG
T2-12073-01
NOTES UNLESS OTHERWISE SPECIFIED

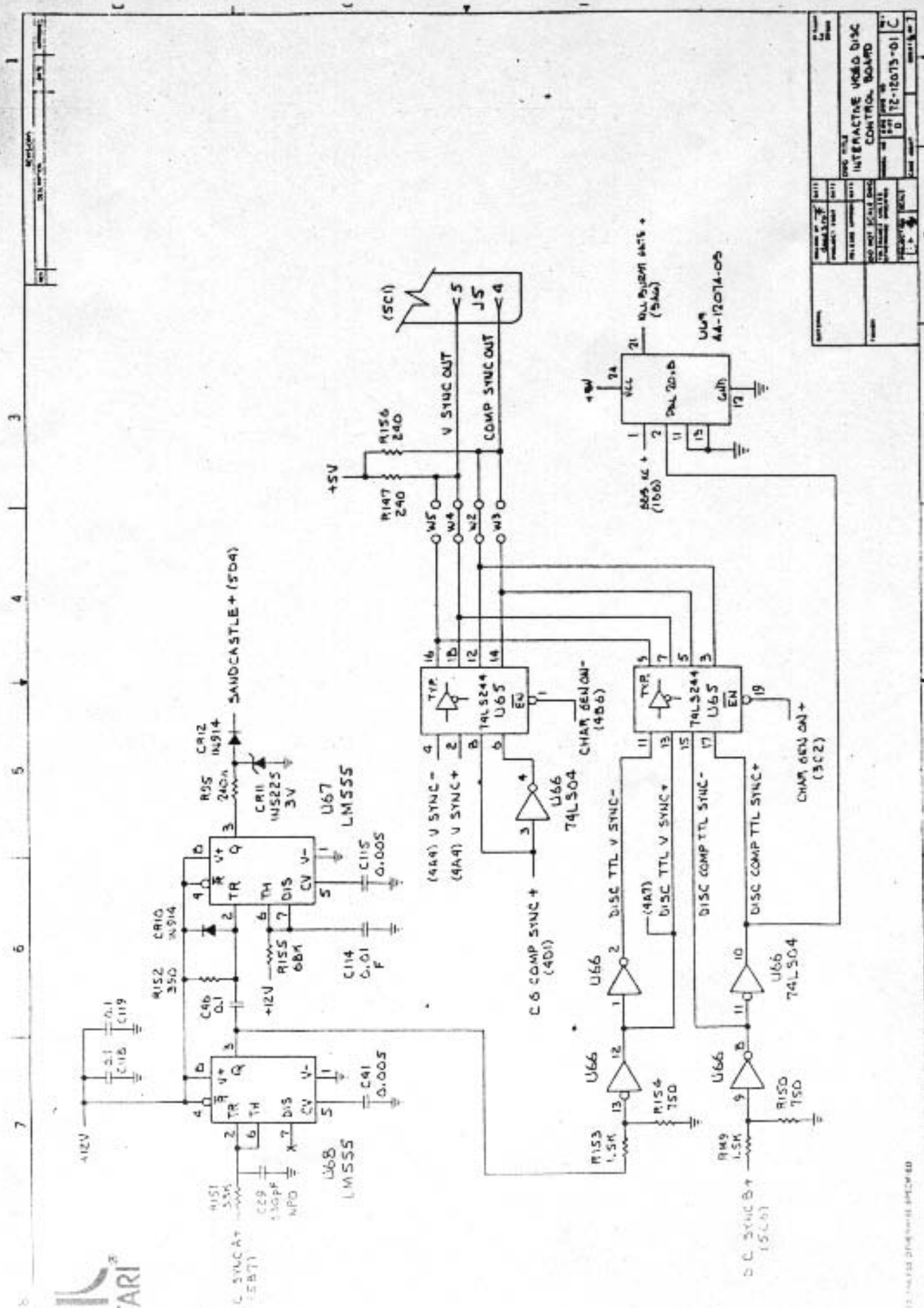
INTERACTIVE VIDEO DISC CONTROL BOARD
12-12073-01
V SYNC OUT
COMP SYNC OUT
+5V
+12V
SANDCASTLE+ (5D4)
CHAR GEN ON+ (3C2)
CHAR GEN ON- (4B6)
C6 COMP SYNC + (4D1)
DISC TTL V SYNC-
DISC TTL V SYNC+
DISC COMP TTL SYNC-
DISC COMP TTL SYNC+
74LS244
74LS04
LM555
ATARI

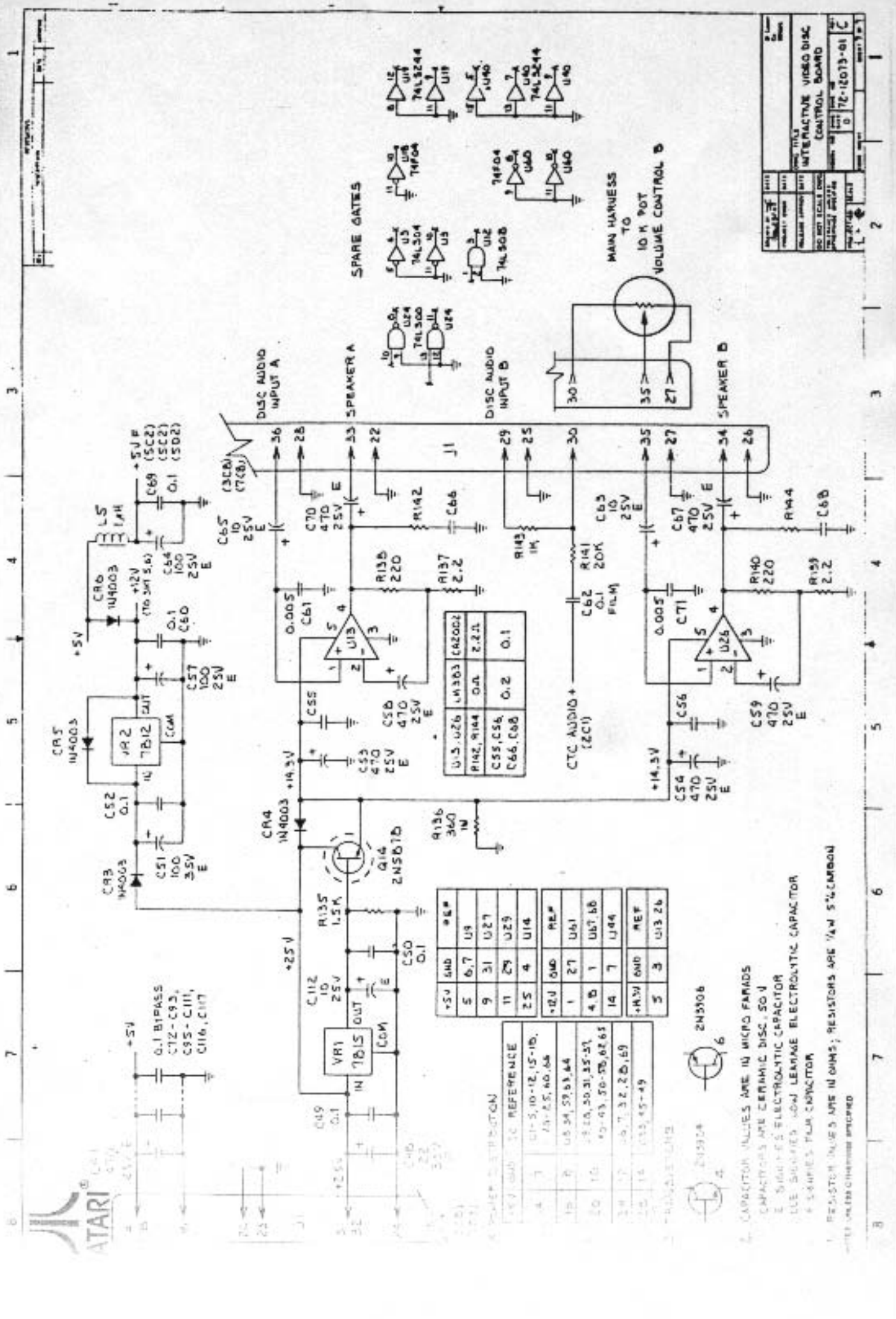
SPARE GATES
MAIN HARNESS TO 10 K POT VOLUME CONTROL B
DISC AUDIO INPUT A
SPEAKER A
DISC AUDIO INPUT B
SPEAKER B
INTERACTIVE VIDEO DISC CONTROL BOARD
CTC AUDIO+ (2C1)
+5V
+12V
+25V
+14.3V
0.1 BYPASS C12-C93, C95-C111, C116, C117
2N3906
ATARI

2.0 INTERFACE

2.1 INTRODUCTION

The IVDBC is intended for use in a variety of configurations. Therefore, not all of the interfaces described here would be used in a specific application.

2.2 CIRCUIT BOARD CONNECTORS

Reference Designator	Description	Mating Connector
J1	36-Pin Control Panel inputs, coin acceptor switch inputs, coin counter outputs, DC power input, audio input, volume control and audio output	Molex Shell Order #03-06-1362 Molex Pin Model #4529 or #4559 (female)
J2	6-Pin serial, video disc player interface - serial send, receive and handshaking	Molex Shell Order #03-09-2062 Molex Pin Model #1190, 1380, 2870 or 1434 (male)
J3	24-Pin Parallel video disc player interface, - 8-bit data and handshaking.	Amphenol Type 24
J4	Composite video input from video disc player	BNC
J5	6-Pin RGB output to monitor	Molex Shell Order #03-09-1063 Molex Pin Model #1189,1381,2871 or 1433

2.2 CIRCUIT BOARD CONNECTORS (cont'd)

Reference Designator	Description	Mating Connector
J5 (cont'd)		(Female Pin 1-5) Molex Pin Model #1190, 1380, 2870 or 1434 (Male - Pin 6 only)
J6	16-Pin General Output	16-Pin ribbon cable

2.3 CONNECTOR PINNING

Connector	Pin #	Function
J1	1	Joystick - up
	2	Joystick - down
	3	Not used
	4	+5V @ 2A supply
	5	Joystick - left
	6	Joystick - right
	7	Not used
	8	+5V @ 2A supply
	9	Right coin acceptor switc
	10	Left coin acceptor switch
	11	Not used
	12	Coin counter - right
	13	Two player start switch
	14	One player start switch
	15	Action Switch
	16	5V supply return
	17	Not used
	18	Not used
	19	Coin counter - left
	20	Ground (common)
	21	Not used
	22	Ground (common)
	23	Ground (common)
	24	Ground (common)
	25	Ground (common)
	26	Ground (common)
	27	Ground (common)
	28	Ground (common)
	29	Video disc audio input -
	30	Volume control output -
	31	+25V @ 2A supply
	32	+25V @ 2A supply
	33	Speaker A-output
	34	Speaker B-output
	35	Volume control wiper - B
	36	Video disc audio input -

* See Audio/Volume Control Diagram

2.3 CONNECTOR PINNING (cont'd)

Connector	Pin #	Function
J2	1	Serial data to player
	2	Signal ground
	3	DTR to disc player
	4	CTS from disc player
	5	Signal ground
	6	Serial data from player
J3	1	Data Bit 0
	2	Data Bit 1
	3	Data Bit 2
	4	Data Bit 3
	5	Not used
	6	Not used
	7	Ready
	8	Not used
	9	Not used
	10	Not used
	11	Enter
	12	Not used
	13	Data Bit 4
	14	Data Bit 5
	15	Data Bit 6
	16	Data Bit 7
	17	Int/Ext
	18	Ground
	19	Ground
	20	Ground
	21	Ground
	22	Ground
	23	Ground
	24	Ground
J4	1	Signal - composite video
	2	Ground
J5	1	Red output
	2	Ground
	3	Blue output
	4	Comp Sync output
	5	V Sync output
	6	Green output
J6	1	Data Bit 3
	2	Data Bit 2
	3	Data Bit 1
	4	Data Bit 0
	5	Address Bit 2
	6	Address Bit 1
	7	Address Bit 0
	8	Decoding Bit 2
	9	Decoding Bit 1
	10	Not used
	11	+5V output
	12	+5V output
	13	+5V output
	14	Ground
	15	Ground
	16	Ground

2.4 VOLUME CONTROL SCHEME

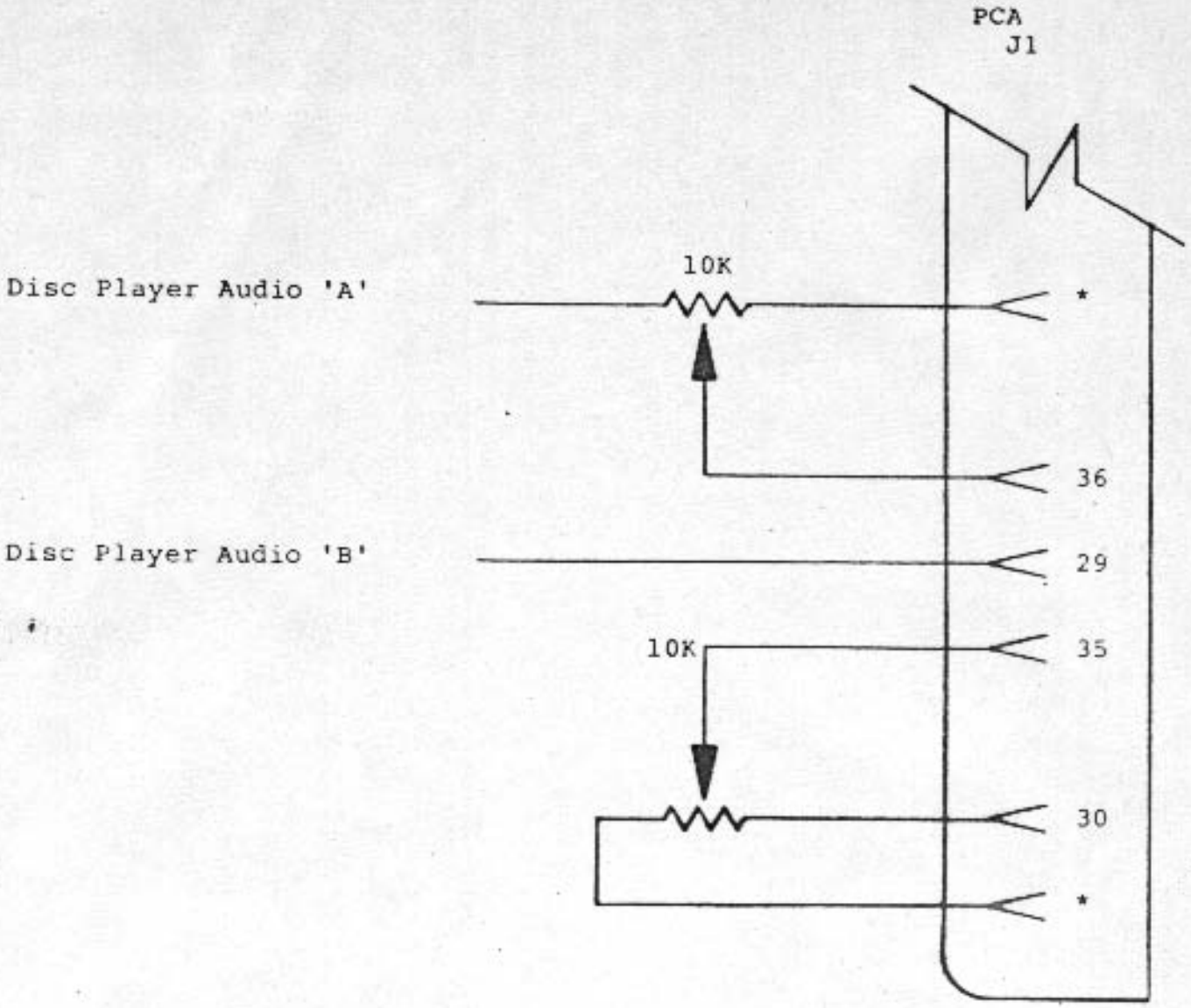

* Any ground (common)

SIZE A	DRAWING NUMBER	
SCALE		SHEET

2.5 Power Supply Requirements

Two voltages are required:
+5VDC @ 2 amps regulated ±5%
+25VDC @ 1.3 amps unregulated

3.0 SYSTEM OPERATION

3.1 Initialization

The system is initialized whenever power is cycled or the reset switch (S1) is depressed.

3.2 Options

Two banks of eight switches each, SWA and SWB are used to select various coinage and game play options. These switches are read only immediately after system reset. Modifying the switch settings has no effect until system reset occurs.

3.2.1 Coinage/Credit Options

Two independent coin acceptor switch/coin counter combinations have been provided for coin/credit ratios which are determined for the left and right coin acceptors by SWA and SWB respectively. Program logic requires that the number of coins for a slot be detected before credits are incremented. Credits are incremented by the amount selected.

3.2.1.1 Left Slot

Coins:

SWA-1	SWA-2	SWA-3		
Off	Off	Off	=	Freeplay
On	Off	Off	=	1 coin
Off	On	Off	=	2 coins
On	On	Off	=	3 coins
Off	Off	On	=	4 coins
On	Off	On	=	5 coins
Off	On	On	=	6 coins
On	On	On	=	7 coins

3.2.1.1 Left Slot (cont'd)

Credits:

SWA-4	SWA-5	SWA-6		
Off	Off	Off	=	slot disabled
On	Off	Off	=	1 credit
Off	On	O	=	2 credits
On	On	Off	=	3 credits
Off	Off	On	=	4 credits
On	Off	On	=	5 credits
Off	On	On	=	6 credits
On	On	On	=	7 credits

3.2.1.2 Right Slot

Coins:

SWB-1	SWB-2	SWB-3		
Off	Off	Off	=	Freeplay
On	Off	Off	=	1 coin
Off	On	Off	=	2 coins
On	On	Off	=	3 coins
Off	Off	On	=	4 coins
On	Off	On	=	5 coins
Off	On	On	=	6 coins
On	On	On	=	7 coins

Credits:

SWB-4	SWB-5		
Off	Off	=	slot disabled
On	Off	=	1 credit
Off	On	=	2 credits
On	On	=	3 credits

3.2.2 Lives per Game

SWB-6

Off	3 lives per game
On	5 lives per game

3.2.3 Power-up Diagnostics

SWB-7	
Off	Disabled **
On	Enabled

3.2.3 Difficulty

SWA-7	SWA-8	
Off	Off	Easy **
On	Off	Intermediate
Off	On	Hard
On	On	Very hard

NOTE:-

Set option switch SWB-8 to OFF before entering diagnostic mode. This disables the watchdog timer.

** Atari recommended setting.

4.3 POWER-UP DIAGNOSTICS

LED display DS1 is used as an indicator for the power-up diagnostics. As each portion of the diagnostic is run, an identifying number is displayed as follows:

1 - CPU test
2 - ROM test
3 - RAM test
4 - Display memory test
5 - CTC test
6 - DART test

Where there is a diagnostic failure, the display will freeze with the number of the test which failed.

During normal game play, DS1 and DS2 are driven by the 10 msec and 5 msec system interrupts and will flicker accordingly.

'Eurolair' Option Switch Diagram

Left Slot Coins:

SWA-1	SWA-2	SWA-3	
Off	Off	Off	= freeplay
On	Off	Off	= 1 coin
Off	On	Off	= 2 coins
On	On	Off	= 3 coins
Off	Off	On	= 4 coins
On	Off	On	= 5 coins
Off	On	On	= 6 coins
On	On	On	= 7 coins

Left Slot Credits:

SWA-4	SWA-5	SWA-6	
Off	Off	Off	= slot disabled
On	Off	Off	= 1 credit
Off	On	Off	= 2 credits
On	On	Off	= 3 credits
Off	Off	On	= 4 credits
On	Off	On	= 5 credits
Off	On	On	= 6 credits
On	On	On	= 7 credits

Game Difficulty Level:*

SWA-7	SWA-8		
Off	Off	=	Easy
On	Off	=	Intermediate
Off	On	=	Hard
On	On	=	Very Hard

* Difficulty shifts to the next higher level after surviving 5 consecutive rooms (1 shift per game)

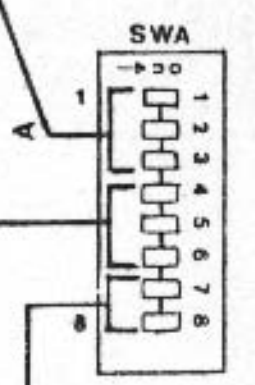

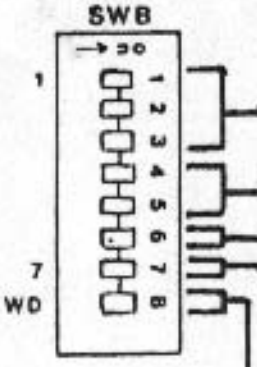

Right Slot Coins:

SWB-1	SWB-2	SWB-3	
Off	Off	Off	= freeplay
On	Off	Off	= 1 coin
Off	On	Off	= 2 coins
On	On	Off	= 3 coins
Off	Off	On	= 4 coins
On	Off	On	= 5 coins
Off	On	On	= 6 coins
On	On	On	= 7 coins

Right Slot Credits:

SWB-4	SWB-5	
Off	Off	= slot disabled
On	Off	= 1 credit
Off	On	= 2 credits
On	On	= 3 credits

Lives Per Game:

SWB-6

Off = 3 lives per game
On = 5 lives per game

Enable Power-up Diagnostics:

SWB-7

On = Enable Diagnostics at Power-up
Off = Disable Diagnostics

Watchdog Timer Enable:

SWB-8

On = Enable Watchdog Timer
Off = Disable Watchdog Timer