September 1982
Game Nos. 300, 301 & 302

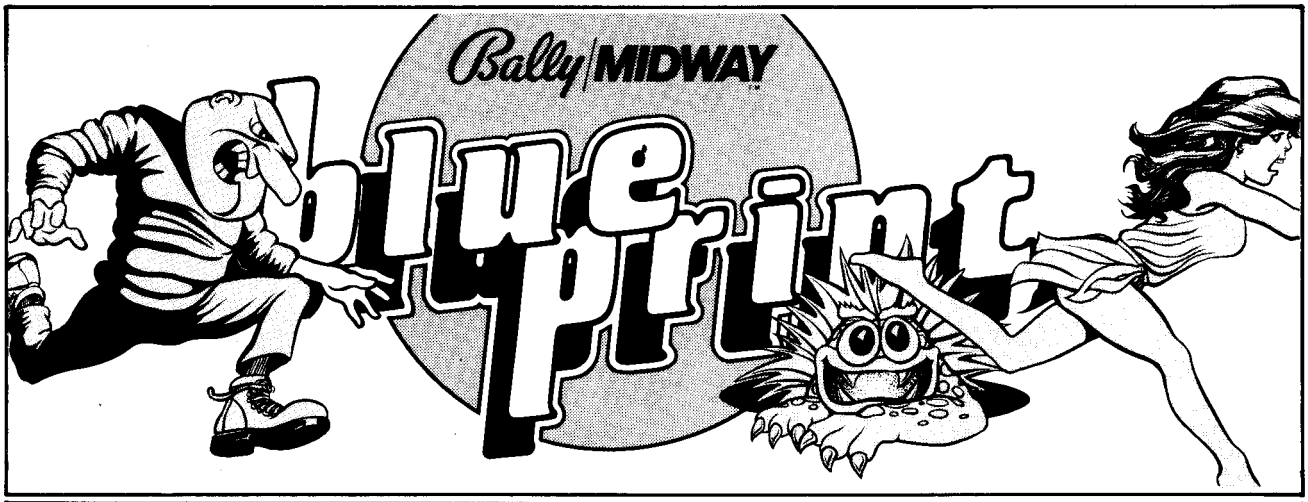

Parts & Operating Manual

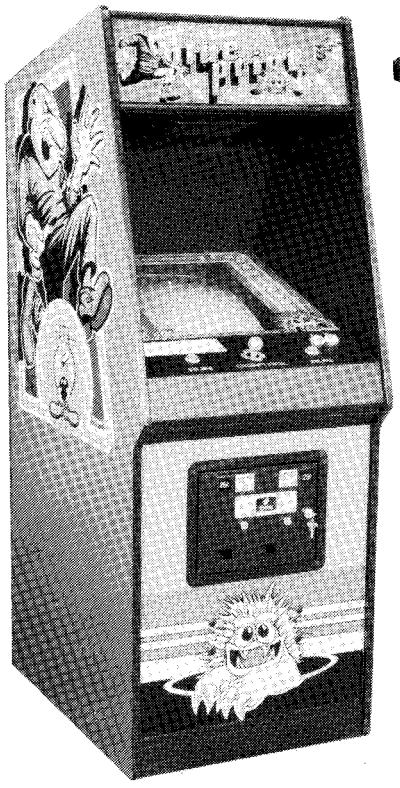

NO. 300 UPRIGHT

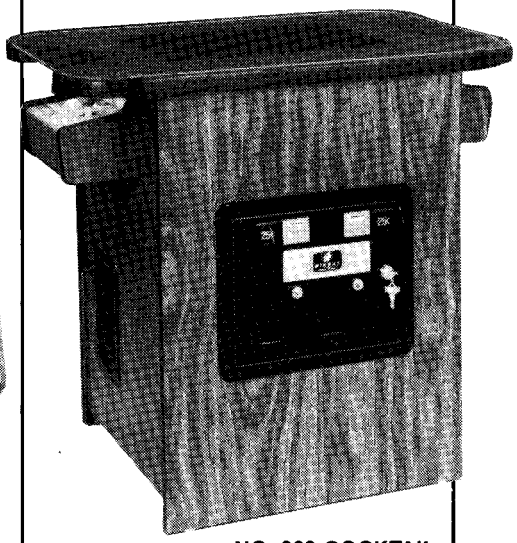

NO. 302 COCKTAIL

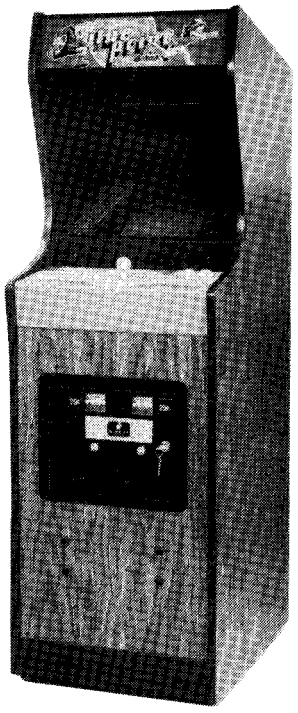

NO. 301 MINI

Bally

MIDWAY MFG. CO.

10750 W. Grand Avenue
Franklin Park, Illinois 60131
U.S.A.

Phone: (312) 451-1360 **Cable Address: MIDCO** **Telex No.: 72-1596**

Form No. 0300-00300-0000

TABLE OF CONTENTS

DESCRIPTION		PAGE
I.	**Introduction**	1-1
II.	**Location and Setup**	
	Inspection	2-1
	Installation	2-1
	Self-Test	2-4
	Game Volume Adjustment Control	2-4
	Option Switch Settings	2-4
III.	**Game Operation**	
	Self-Test Mode	3-1
	Attract Mode	3-3
	Ready to Play Mode	3-4
	Play Mode	3-4
	High Score/Initial Mode	3-5
	Two Player Operation	3-6
IV.	**Maintenance and Repair**	
	Cleaning	4-1
	Fuse Replacement	4-1
	Opening the Control Panel	4-2
	Removal of the Main Display Glass & T.V. Bezel	4-4
	T.V. Monitor Replacement	4-5
	Printed Circuit Board Replacement	4-8
	Opening the Attraction Panel	4-10
V.	**Illustrated Parts Breakdown**	
	Transformer Board Assy. — Parts List	5-1
	No. 300 — BLUEPRINT — Upright — Front	5-2
	No. 300 — BLUEPRINT — Upright — Front — Parts List	5-3
	No. 300 — BLUEPRINT — Upright — Rear Access	5-4
	No. 300 — BLUEPRINT — Upright — Rear Access — Parts List	5-5
	No. 300 — BLUEPRINT — Upright — Header Fluorescent Light Assy.	5-6
	No. 300 — BLUEPRINT — Upright — Header Fluorescent Light Assy. — Parts List	5-7
	No. 301 — BLUEPRINT — Mini — Front	5-8
	No. 301 — BLUEPRINT — Mini — Front — Parts List	5-9
	No. 301 — BLUEPRINT — Mini — Rear Access	5-10
	No. 301 — BLUEPRINT — Mini — Rear Access — Parts List	5-11
	No. 302 — BLUEPRINT — Cocktail — Front	5-12
	No. 302 — BLUEPRINT — Cocktail — Front — Parts List	5-13
	No. 302 — BLUEPRINT — Cocktail — Interior Access	5-14
	No. 302 — BLUEPRINT — Cocktail — Interior Access — Parts List	5-15
	BLUEPRINT — All Versions — Card Rack Assy. — Parts List	5-16
	BLUEPRINT — All Versions — Card Rack Assy.	5-17
	BLUEPRINT — Control Assy.	5-18
	BLUEPRINT — Control Assy. — Parts List	5-19
	Filter Assy.	5-20
	Filter Assy. — Parts List	5-21
	Front Door Assy. — U.S.A. 25¢	5-22
	Front Door Assy. — U.S.A. 25¢ — Parts List	5-23

TABLE OF CONTENTS (cont'd)

DESCRIPTION	PAGE
VI. Technical Troubleshooting	6-1
Introduction	6-1
General Suggestions	6-1
Harness Component Troubleshooting	6-1
Transformer and Line Voltage Problems	6-2
A Glossary of Microprocessor Terms	6-3
Introduction to the Z80 CPU	6-3
General Purpose Registers	6-4
Arithmetic and Logic Unit (ALU)	6-4
Instruction Register and CPU Control	6-4
Z80 CPU Pin Description	6-4
VII. Coin Door Maintenance	7-1
Metal Coin Acceptor Merchanisms	7-1
Plastic Coin Acceptor Mechanisms	7-3
VIII. T.V. Monitor Manual	
Introduction	8-1
Symptom Diagnosis	8-2
Guide to Schematic Symbols	8-3
Troubleshooting	8-5
Theory of Operation	8-6
Differences Between Monitors	8-8
Controls You May Not Touch	8-9
Parts Interchangeability	8-9
Wells Gardner Monitor Schematic — 19"	8-10
Wells Gardner Monitor Replacement Parts List	8-11
Electrohome Monitor Schematic — 19"	8-13
Electrohome Monitor Replacement Parts List	8-14
Electrohome Monitor Schematic — 13"	8-18
Electrohome Monitor Replacement Parts List	8-19
IX. Schematics & Wiring Diagrams	
Wiring Diagram — Upright	9-1
Wiring Diagram — Mini	9-2
Wiring Diagram — Cocktail	9-3
70 VA Power Supply P.C.B. — Component Layout	9-4
70 VA Power Supply P.C.B. — Schematic	9-5
Video P.C. Board — Component Layout	9-6
Video P.C. Board — Schematic	9-7
MPU/Sound Board — Component Layout	9-8
MPU/Sound Board — Schematic	9-9
Credit Multiplier P.C. Board — Component Layout	9-10
Credit Multiplier P.C. Board — Schematic	9-11
Credit Multiplier By-Pass P.C. Board — Component Layout	9-12
Credit Multiplier By-Pass P.C. Board — Schematic	9-13

TABLE OF FIGURES

FIGURE		PAGE
1-1	Assigned Point Values	1-2
2-1	Location of Serial No., Interlock Switch, On/Off Switch, & Major Sub-Assemblies	2-2
2-2	Major Sub-Assemblies (Cont. from Fig. 2-1)	2-3
2-3	Interlock Switch Operation	2-3
2-4	Game Volume Adjustment Control & Option Switch Location	2-4
2-5	Option Switch Settings	2-5
3-1	Game Operation	3-1
4-1	Location of Fuses	4-1
4-2	Opening the Control Panel — Upright & Mini	4-2
4-3	Opening the Cocktail Game	4-3
4-4	Removing the Control Panel — Cocktail	4-3
4-5	Removal of Main Display Glass & T.V. Bezel — Upright	4-4
4-6	Removal of Main Display Glass & T.V. Bezel — Mini	4-4
4-7	Removing Top Glass — Cocktail	4-5
4-8	Removing Monitor — Upright	4-6
4-9	Removing Monitor — Mini	4-6
4-10	Opening the Cocktail Game	4-7
4-11	Removing Monitor — Cocktail	4-7
4-12	Replacing P.C.B.s — Upright	4-8
4-13	Replacing P.C.B.s — Mini	4-8
4-14	Replacing P.C.B.s — Cocktail	4-9
4-15	Opening the Attraction Panel — Upright	4-10
4-16	Replacing Fluorescent Tube Starter — Upright	4-11
4-17	Opening the Attraction Panel — Mini	4-11
7-1	Removing and Replacing the Coin Acceptor	7-1
7-2	Cleaning the Metal Coin Acceptor	7-2
7-3	Lubricating the Metal Coin Acceptor	7-2
7-4	Opening the Plastic Coin Acceptor	7-3
7-5	Changing the Plastic Coin Acceptor to Accept American or Canadian Quarters	7-4

Blueprint

IMPORTANT NOTE

DO NOT plug in your new game yet. Before you do anything to your game, we recommend that you read SECTIONS I and II of this manual completely. It will not take more than a few minutes and it may be very helpful.

I. Introduction

BLUEPRINT is a one or a two player game. There are three models: the "UPRIGHT", "MINI", and "COCKTAIL TABLE". When the two player mode is selected on the Upright or Mini model, the players take turns at the controls to guide J.J. through the game course. If you have purchased the Cocktail Table model of this game, the rules of play are the same. The only **difference** is that in the two player mode of the Cocktail Table game, the picture flips to face you when it's your turn.

When playing this game, you must direct J.J. through the maze he is in. This is done with the control stick. J.J. is searching for the parts to build the Ammo Machine on the BLUEPRINT at the bottom of the screen which will enable him to save his girl friend from the ogre that is chasing her across the top of the screen.

Each part of this Ammo Machine is contained in one of the houses in the maze. Two of the houses contain bombs. Also, any house that J.J. has removed a part of the Ammo Machine from will contain a bomb if he goes back into it for any reason.

If J.J. goes into a house and comes out with a part for the Ammo Machine, he must tow it down to the BLUEPRINT and place this part over the corresponding section of the BLUEPRINT. This done, he can head back into the maze and go looking for another part to the Ammo Machine.

If J.J. goes into a house and comes out with a bomb, he must make his way to the Bomb Pit located at the lower right hand corner of the screen and throw it in **BEFORE** it goes off. If he fails, you lose one man.

Once the Ammo Machine is built, J.J. must push the Start Button for it located at the lower left hand corner of the screen. Once this is done, the Ammo Machine will start firing at the ogre chasing J.J.'s girl friend across the top of the screen. You can move the Ammo Machine back and forth across the bottom of the screen at this time with the control stick. It does not move up and down on the screen.

As your skill level increases, the ogre runs faster, the bomb fuses are shorter, a maze monster will appear (which can cause you to lose one man if you touch him), and so on. In general, each maze will be harder to complete than the one before.

A bonus man is awarded to you as you reach or pass a certain preselected point value. Each part of the Ammo Machine, the bombs, etc., have an assigned point value as listed in Figure 1-1.

Game Objective

The object of the game is to **HAVE FUN** and survive as long as possible while constantly improving your skills and destroying as many of the ogres as you can. As you do this, each succeeding rack will be harder to complete.

OBJECT DESCRIPTION	POINT VALUE
EACH PART OF AMMO MACHINE	1000 POINTS
BOMB	50 POINTS
WEIRD WILLIE (BACK TO BOMB DISPOSAL PIT)	100 POINTS
OGRE	VARIABLE 25 TO 1000 POINTS

Figure 1-1 Assigned Point Values

II. Location and Setup

INSPECTION:

1. Remove the game from its shipping crate.
2. Inspect the entire outside of it for any signs of damage.
   - ☐ Any scratches?, dents?, cracks?
   - ☐ Any broken controls?
   - ☐ Any broken glass or plastic?
   - ☐ Just look it over closely and make a note of any signs of damage.
3. Remove the shipping cleats from the bottom of the cabinet.
4. Install the four levelers, one at each corner of the cabinet.
   - ☐ Level the cabinet.
5. Open the cabinet and inspect the inside of the game for any signs of damage. See Figure 2-1.
   - ☐ Also check to make sure all plug-in connectors on the wire harness are firmly seated.

   NOTE: ALL connectors or plugs are keyed so they will only go together when all pins are properly lined up.
   - ☐ Replug any connectors found unplugged. DO NOT FORCE PLUGS ONTO CONNECTORS. DO NOT FORCE PLUGS TOGETHER. If it won't go on easily, assuming the keys are lined up, it either does not belong there or is damaged.
   - ☐ Make sure all printed circuit boards (P.C.B.'s) are firmly seated in their connectors. These connectors are also keyed. The P.C.B.'s will only go into them one way without being damaged.
   - ☐ Note the location of the game's serial number. See Figure 2-1.
   - ☐ Check all major subassemblies to be sure they are mounted securely. These are called out in Figures 2-1 & 2-2.
     Power supply.
     Control panel(s).
     T.V. monitor.
     Other P.C.B.'s and/or P.C.B. rack, etc.
     Power supply filter assembly.
     Transformer board assembly.
6. Make a note of any problems that can't be easily corrected.
7. Call your distributor and/or service man about your problem list.

INSTALLATION:

1. **Location requirements:**
   - ☐ **Power:**
     Domestic 110 V @ 60 Hz
     Foreign 200 V to 240 V @ 50 Hz
   - ☐ **Temperature:** 32° to 100° F (0° to 38° C)
   - ☐ **Humidity:** Not over 95% relative
   - ☐ **Space required:**
     Upright 25" x 35" (63cm x 88cm)
     Mini 20" x 24" (50cm x 60cm)
     Cocktail 32" x 22" (81cm x 55cm)
   - ☐ **Game height:**
     Upright 68" (170cm)
     Mini 61" (153cm)
     Cocktail 29" (73cm)

2. **Voltage Selection:**

   Your game is designed to work properly on the line voltage where you are located. Check your line voltage with a meter to determine what its value is. Then check the power input wires to the main power supply transformer on your game to be sure they are connected to taps which correspond to your line voltage value.

   If the power input wires to the main power supply transformer are not connected to taps which correspond to your local line voltage, move them to the proper taps.

   If the line voltage in your area falls outside the upper or lower limits of the range of inputs covered by the main power supply transformer, **DO NOT PLUG YOUR GAME IN** until you have talked with your distributor and/or service man and obtained a solution to this problem. Otherwise you could damage your game.

3. **Interlock and power ON/OFF switches.** See Figure 2-1.
   - ☐ To help prevent the possibility of getting an electric shock while working inside the game cabinet, interlock switches have been installed at each cabinet access door (this **DOES NOT** include the coin door in the Upright and Mini models).
   - ☐ When any access door is opened, the interlock switch installed there turns off all power to the game.
   - ☐ Check each interlock switch for proper operation.

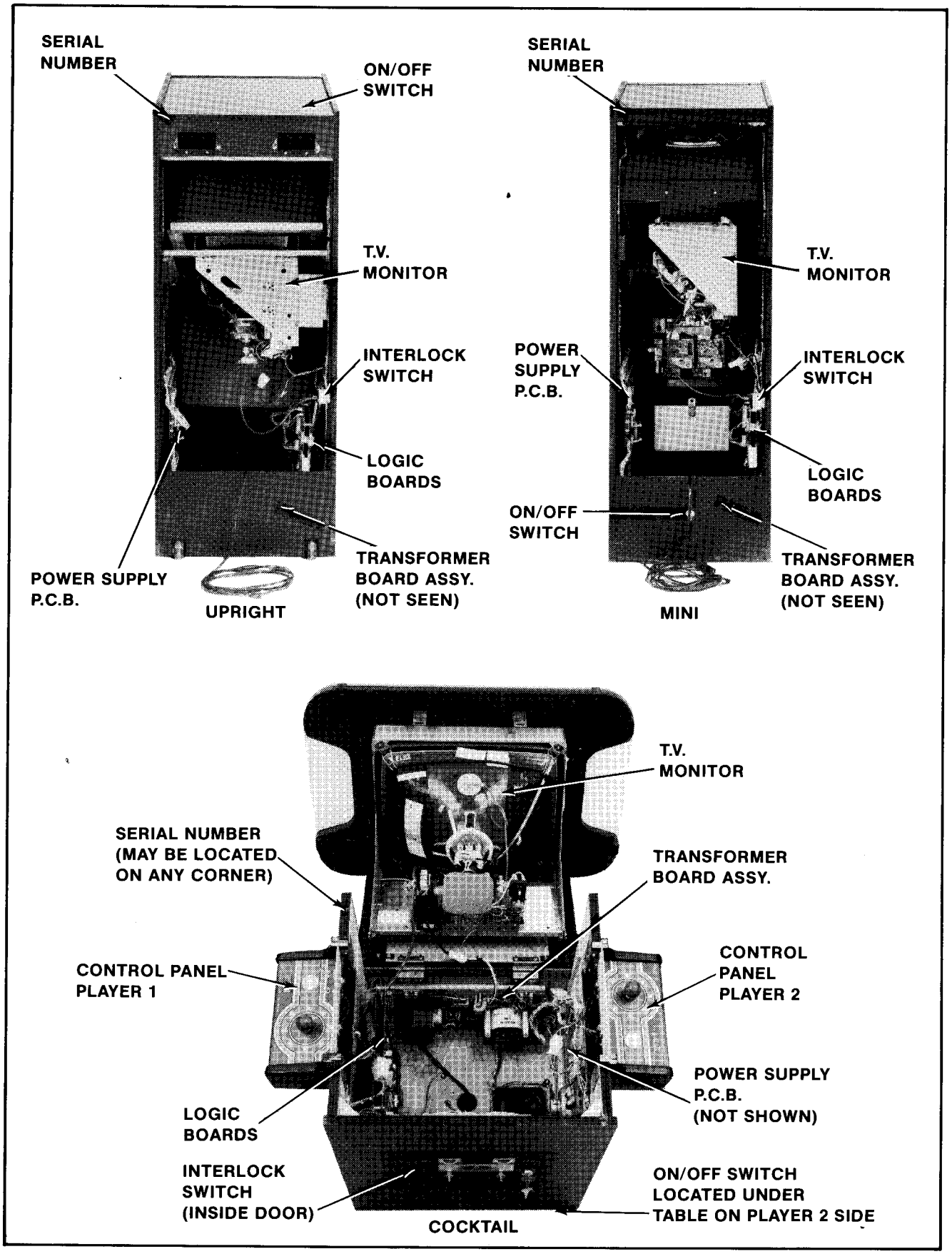

Figure 2-1 Location of Serial No., Interlock Switch, On/Off Switch, & Major Sub-Assemblies

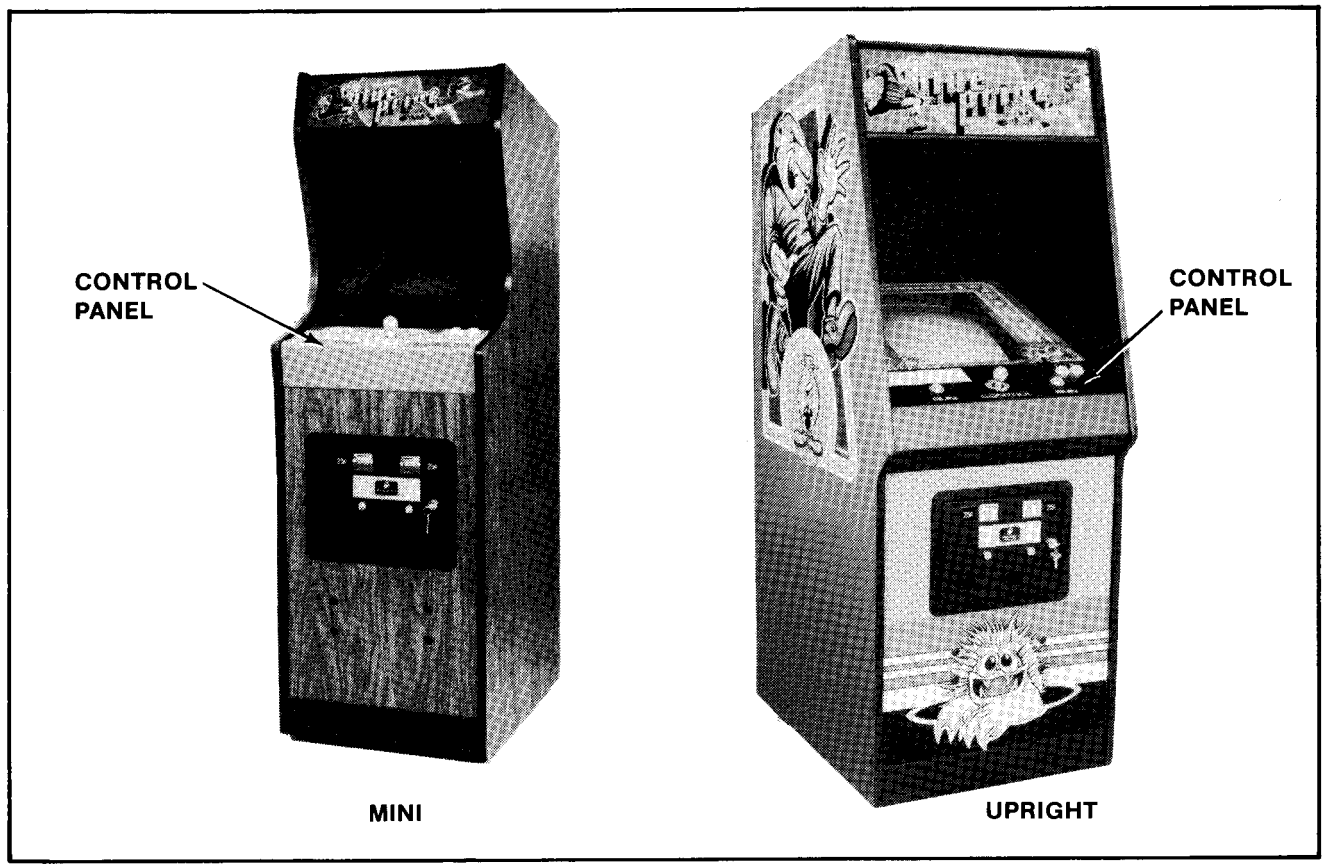

Figure 2-2 Major Sub-Assemblies (Cont. from Fig. 2-1)

After checking the line voltage in your area and determining that the input wires to the main power supply transformer of your game are connected properly — or — after obtaining a solution to your over or under voltage problem from your distributor and/or your service man, plug the game into your A.C. wall outlet.

The game ON/OFF switches for all models are located as shown in Figure 2-1. Turn the game on and allow it to warm up a few minutes.

Slowly open each access door to the game (this **does not** include the coin door on the Upright and Mini models).

As the door is opened approximately 1" (2.54cm) the power to the game should go off (the T.V. monitor, all the lights, and all sounds will stop).

If this does not happen, check the interlock switch by this door to see if it has broken loose from its mounting or if it is stuck in the "ON" position.

If the switch is found to be bad, turn the game off, unplug it, and replace the interlock switch.

When done, plug the game back into the wall outlet, close the access door, and turn the game back on.

After the game has warmed up, repeat the above interlock switch test.

When the interlock switch is working properly and turns the power to the game off, power may be restored to the game with the access door(s) open. Take hold of the interlock switch plunger and **gently** pull it out to its fully extended position. THIS IS TO BE USED **ONLY** FOR SERVICING THE GAME. See Figure 2-3.

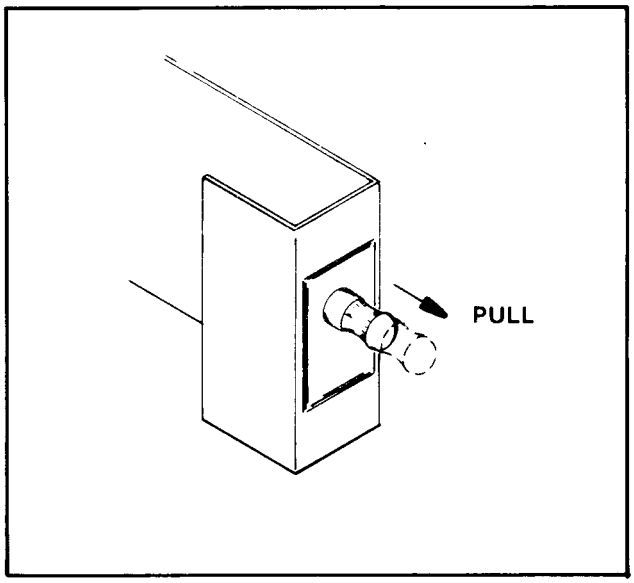

Figure 2-3 Interlock Switch Operation

SELF-TEST:

Your new game will Self-Test itself to see if it has any bad parts. The information it receives while testing itself will be shown on the T.V. monitor. See the GAME OPERATION section for a more detailed description of this function.

When there is a bad result according to the Self-Test, call your distributor and/or service man to have the trouble fixed unless it is something you can do yourself (such as replace a bad RAM or ROM chip).

GAME VOLUME ADJUSTMENT CONTROL:

See Figure 2-4.

The game volume control pots (MASTER VOLUME and BACKGROUND VOLUME) are located on the MPU/SOUND board. The other board is the VIDEO board. There are two pots. For adjustment, they may be reached through the rear access door on the UPRIGHT and MINI models. On the COCKTAIL TABLE models, you will have to open the table top to reach them.

To make the sounds louder, turn the pots clockwise as you face them ( ).

To make the sounds **less** loud, turn the pots counter-clockwise as you face them ( ).

OPTION SWITCH SETTINGS:

To change the option switch settings, you **DO NOT** have to take the MPU board out of the game. They can be easily reached through the rear access door on the Upright and Mini models. On the Cocktail Table model, you do have to open the table top to reach them.

When changing any options, ALWAYS put the game into the Self-Test mode, make your changes, check the results on the monitor screen, take the game out of the Self-Test mode, and play the game to be sure the switches have worked properly and that no switches were accidentally moved that were not meant to be. (These switches are small and this can happen.)

The option switch settings and what they will make the game do are shown in Figure 2-5. See Figure 2-4 for option switch locations.

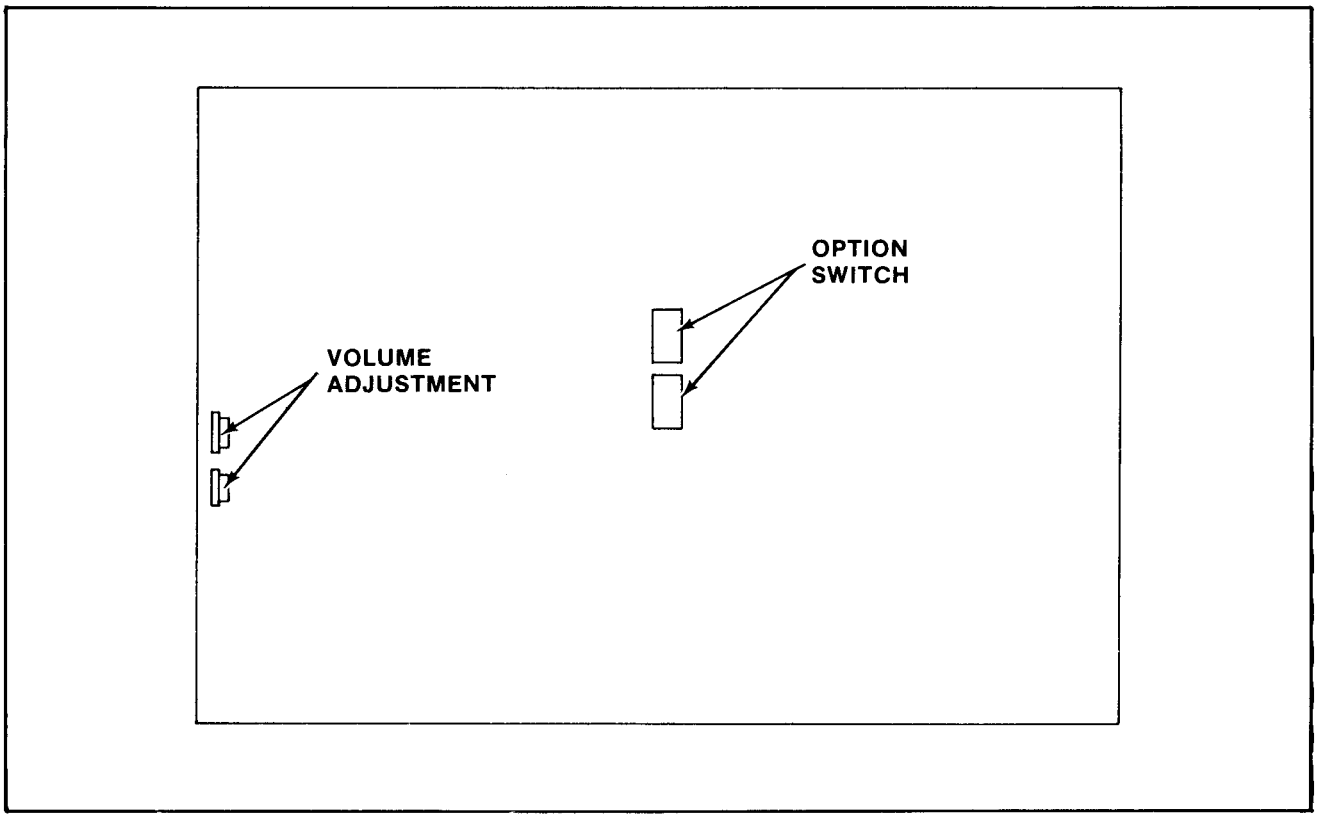

Figure 2-4 Game Volume Adjustment Control & Option Switch Location

BLUE PRINT

OPTION SWITCH SETTINGS

DIP SWITCH 1

BONUS PLAYERS AWARDED:	SW#1	SW#2	SW#3	SW#4	SW#5	SW#6	SW#7	SW#8
ONE MAN AT 20,000 POINTS	**NOT USED**	ON	ON				**NOT USED**	**NOT USED**
*ONE MAN AT 30,000 POINTS		OFF	ON					
ONE MAN AT 40,000 POINTS		ON	OFF					
ONE MAN AT 50,000 POINTS		OFF	OFF					

NORMAL / FREE PLAY	SW#4
FREE PLAY	OFF
*NORMAL PLAY	ON

MAZE MONSTER:	SW#5
*APPEARS IN 2ND MAZE	ON
APPEARS IN 3RD MAZE	OFF

COINS PER CREDIT	SW#6
*1 COIN 1 CREDIT	ON
2 COINS 1 CREDIT	OFF

DIP SWITCH 2

PLAYERS PER CREDIT:	SW#1	SW#2	SW#3	SW#4	SW#5	SW#6	SW#7	SW#8
2 MEN PER CREDIT	ON	ON	**NOT USED**				**NOT USED**	**NOT USED**
*3 MEN PER CREDIT	OFF	ON						
4 MEN PER CREDIT	ON	OFF						
5 MEN PER CREDIT	OFF	OFF						

CABINET STYLE	SW#4
UPRIGHT AND MINI MODELS	ON
COCKTAIL TABLE MODEL	OFF

DIFFICULT LEVEL SETTINGS	SW#5	SW#6
LEVEL 1	ON	ON
*LEVEL 2	OFF	ON
LEVEL 3	ON	OFF
LEVEL 4	OFF	OFF

*INDICATES FACTORY RECOMMENDED SETTINGS.

PART NO. M051-00300-A009 — REVISION B

Figure 2-5 Option Switch Settings

III. Game Operation

BLUEPRINT is a one or a two player game with a color T.V. monitor. The game gives a display which has all the parts shown in Figure 3-1.

The game has five possible modes of operation: ATTRACT, READY-TO-PLAY, PLAY, HIGH SCORE/ INITIAL, and SELF-TEST.

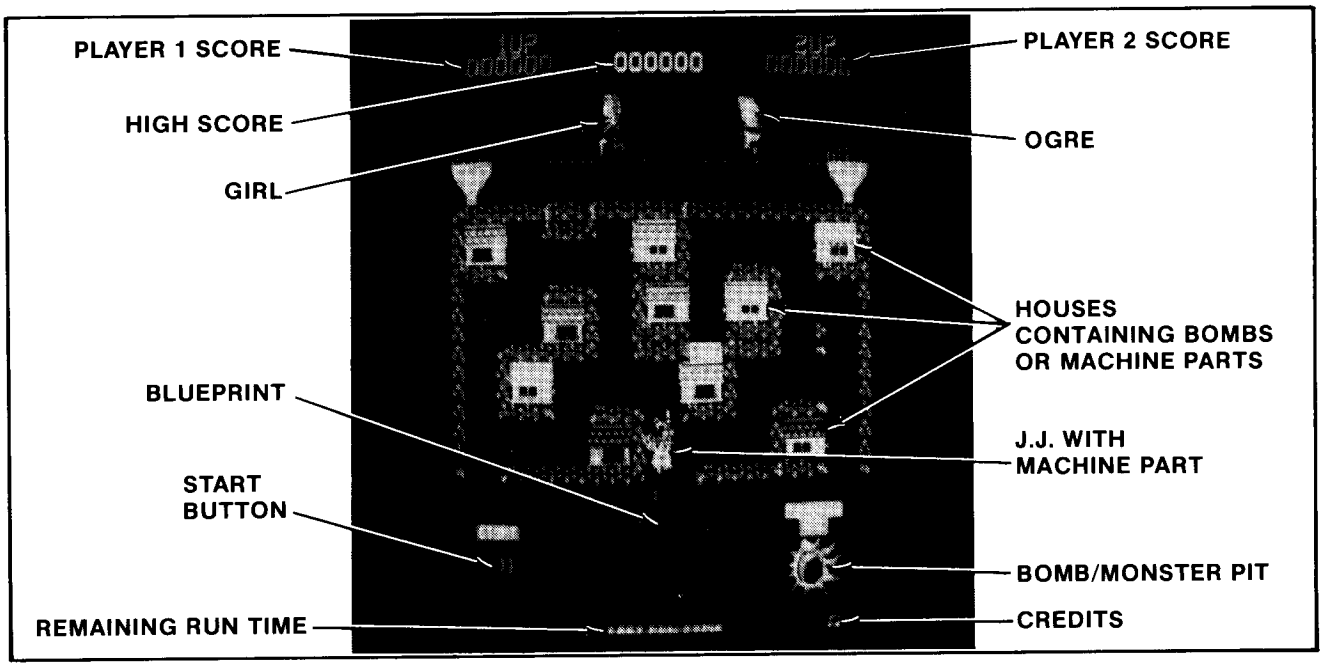

Figure 3-1 Identification of "On Screen" Graphics During Play

SELF-TEST MODE

The Self-Test mode is a special mode for checking game switches and computer functions. It is the easiest and best way to check for proper operation of the entire game.

NOTE: Putting the game into Self-Test will cause it to **erase** any CREDITS shown at the lower right corner of the screen from its memory.

You may begin a Self-Test at any time by sliding the Self-Test switch to the "ON" position. Next, turn the power to the game "OFF" and then back "ON" again. Now that the game is in the Self-Test mode, it will react as follows:

1. You will see two rows of numbers displayed on the monitor screen. Zero through three in the top row and four through seven in the bottom row. These numbers are in a white color. Directly below each of the white numbers is a pair of yellow numbers or letters and numbers together. The correct presentation for each of the tests (0 through 7) is given at the right.

2. If you see any presentation other than this exact one, something in your game is not functioning correctly. **THE READINGS UNDER POSITIONS 5, 6 AND 7** can be disregarded because there is no ROM installed at these P.C. Board locations.

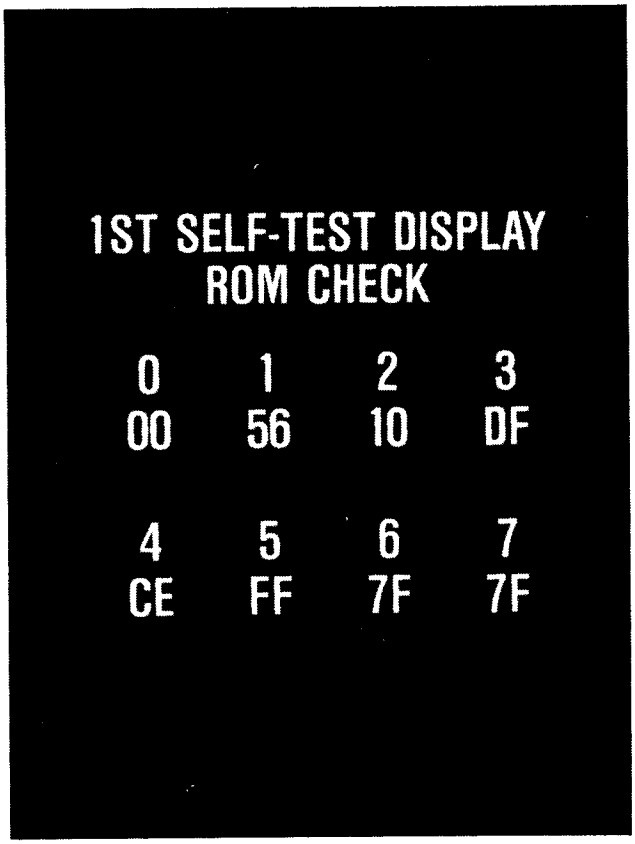

The table that follows shows the P.C. Board locations of all positions (0 through 7) given previously.

DESIGNATION	M.P.U. P.C.B. LOCATION	DESIGNATION	M.P.U. P.C.B. LOCATION
0	1M	4	1S
1	1N	5	NOT USED
2	1P	6	NOT USED
3	1R	7	NOT USED

3. By pressing the 1 and 2 PLAYER BUTTONS at the same time, the game will go to the switch check portion of the Self-Test mode. When this is done, you should see a display which looks like the following.

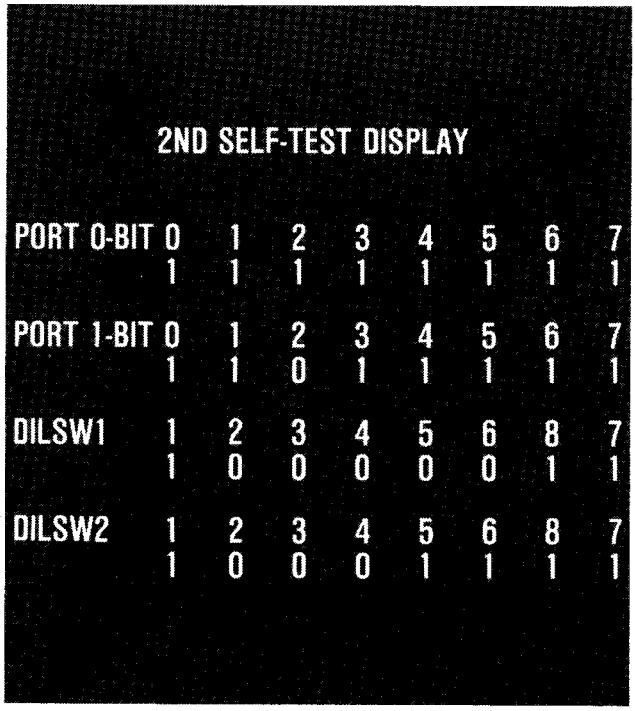

4. Moving the game switches and controls will cause the "1's" to change to "0's" and vice versa. A "0" means that particular switch is "ON" or in the CLOSED condition and a "1" means that particular switch is "OFF" or in the OPEN condition. If you move a switch or control on the game and it has no effect on the above display, the switch/button is either not working, miswired, or disconnected. Check it out thoroughly.
5. By pressing the 1 and 2 PLAYER BUTTONS at the same time, the game will go to the cross hatch pattern display of the Self-Test mode. This may be used for alignments and checks of various types.

   This pattern will remain sharp and clear for about 15 seconds and then it will change to a different rapidly changing one for about another 15 seconds as the game does a RAM check on itself.

   If all the RAMs check good, the cross hatch pattern will return and appear to fade in and out for a short while as the game does a color check on itself before becoming sharp and clear again for another 15 seconds. This sequence continues to repeat itself until you decide to leave the Self-Test mode.
6. If a bad RAM chip is found by the game's internal check system during the Self-Test, the game indicates this to you by displaying any of the below coded on the monitor screen. The following table shows which code translates to which RAM chip locations on the Video P.C. Boards.

BAD RAM LOCATION INFORMATION

SCREEN DISPLAY	ERROR DESCRIPTION	CHECK VIDEO P.C.B. CHIP LOCATIONS
0 DISPLAYED	SCRATCH PAD RAM ERROR	J1, K1, K2, J2, H2
1 DISPLAYED	BACKGROUND C H ERROR	B9, C7, C6, C9, C8, C10, F4, D6
2 DISPLAYED	BACKGROUND ROW POSITION ERROR	D8, D9, D10, D11, B10, D7, B9
3 DISPLAYED	FAST MOVING OBJECT RAM ERROR	D15, D16, D14, E16, E15, E17, C18, B13, B12, A13, A12, D2
7 DISPLAYED	BACKGROUND COLOR RAM ERROR	C11, C12, D12, D13, C9, C8, C10, F4, E14, B8

7. When finished with the Self-Test mode, slide the Self-Test switch back to the "OFF" position, and turn the power to the game "OFF" and then back "ON" again.
8. Normal game functions will now return to the monitor screen.

ATTRACT MODE

1. The Attract mode starts:
   - ☐ Just after power has been turned on to the game. (Self-Test switch is in the "OFF" position.)
   - ☐ After a Self-Test has been completed. (Performing a Self-Test sets the credits in the game's memory to zero "0".)
   - ☐ After a play has been finished, the score was not high enough to put the game into the High Score/Initial mode, and there are no more credits left in the game's memory.
   - ☐ After the High Score/Initial mode when there are no more credits left in its memory.
   - ☐ In the Attract mode, the game will give the following displays **centered** on the monitor screen:

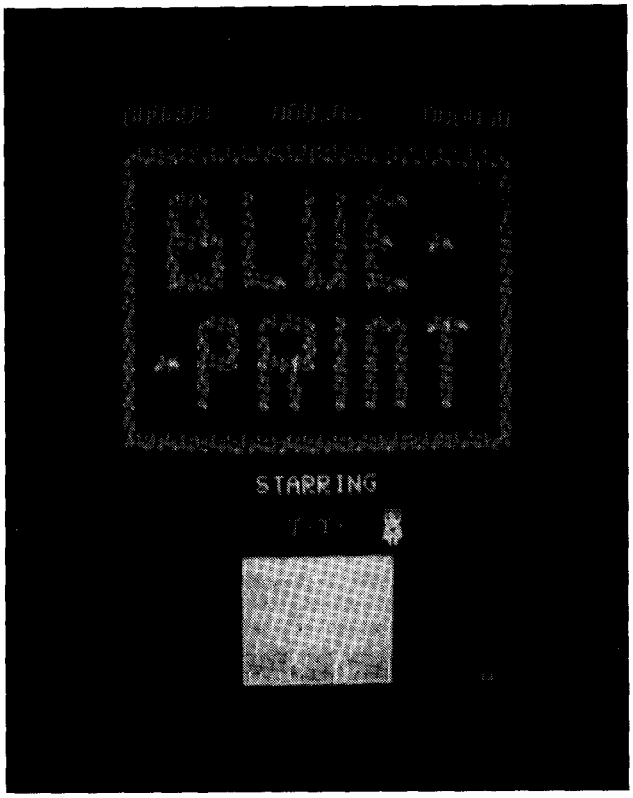

Attract Mode Display 1

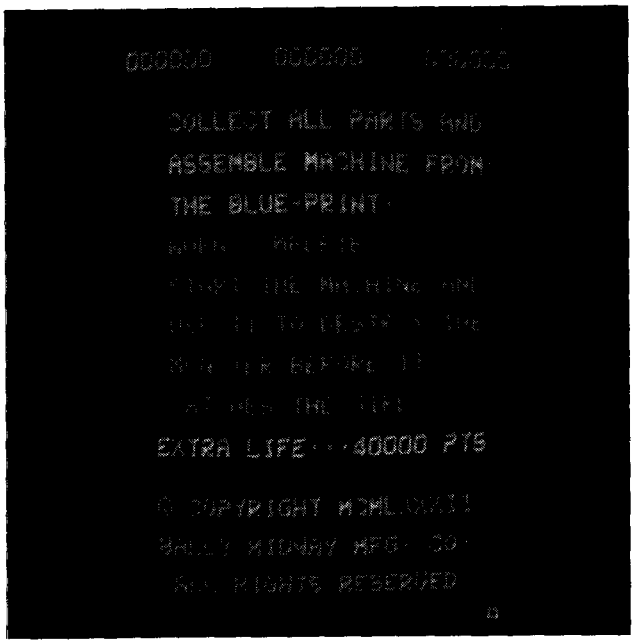

Attract Mode Display 2

THE THIRD DISPLAY IN THE ATTRACT MODE SEQUENCE SHOWS SIMULATED GAME PLAY

- ☐ The next display in the series lists the ten highest scoring individuals that have played the game to date.

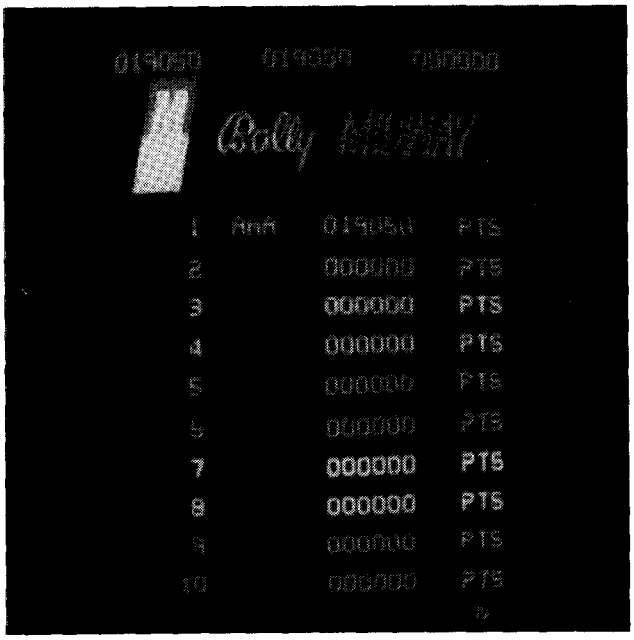

- ☐ No matter where the game is in the Attract mode sequence, it will immediately go to the following display as soon as a game has been paid for. It will hold this display on the monitor screen until the "1 PLAYER" or the "2 PLAYER" start button is pushed.

Ready to Play Mode Display 1

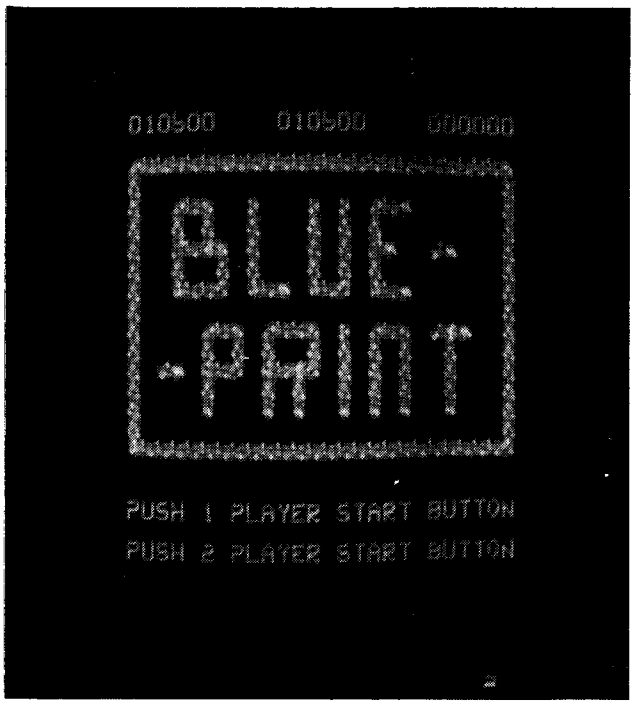

Ready to Play Mode Display 2

READY-TO-PLAY MODE

1. The Ready-To-Play mode starts when enough coins have been accepted for a 1 or a 2 player game.
2. The Ready-To-Play mode ends when either the "1 PLAYER" or the "2 PLAYER" push button is pressed.
3. In the Ready-To-Play mode, the game will give the above display **centered** on the monitor screen.
4. If no START button is pressed, the game will hold the above display on the screen indefinitely.

PLAY MODE

The Play mode begins when either the "1 PLAYER" or the "2 PLAYER" start button is pressed. The "READY-TO-PLAY MODE" display changes color, maze appears, "1 UP" flashes, J.J. appears, and play begins.

The Play mode ends when all of your J.J.'s have had their hearts broken. When this happens, "GAME OVER" is written across the top center of the monitor screen.

In this game, the ogre is chasing J.J.'s girl friend across the top of the monitor screen. **And he's catching up to her!** The **ONLY** way J.J. can save her is to visit all the houses in the maze, collect all the parts needed, and construct the Ammo Machine shown in the BLUEPRINT at the bottom center of the monitor screen. An easy enough task you say — WRONG!

Unfortunately for J.J. he has a number of obstacles to overcome, not to mention a time limit, before he will be able to get the Ammo Machine completely built. Among these obstacles is the fact that two of the houses in the maze contain bombs instead of parts of the Ammo Machine. If he gets one of these, he must make his way to the bomb disposal pit at the lower right hand corner of the monitor screen **BEFORE** it explodes and throw it in. Also, if he enters any house that previously held a part for the Ammo Machine, he will come out with a bomb. This bomb must be thrown into the bomb disposal pit too. If any of the bombs explode **BEFORE** J.J. can throw them into the pit, you will lose one man. And if this is not enough, J.J. must accomplish all of the above while keeping an eye out for the KILLER FLOWER POTS. If he is so much as even slightly touched by one of these little devils, you will lose one man.

And then there's Weird Willie. He's a sort of cute little guy but he's got a screw loose somewhere. I mean, what other reason could you think of for anyone setting up housekeeping in a bomb disposal pit??

At any rate, J.J.'s got to keep an eye out for him. (Now you must understand that Weird Willie doesn't dislike J.J. It's just that he has this odd sense of humor.) If he gets out and J.J. allows him to run around the bottom of the screen, Weird Willie will eventually work his way over to the START BUTTON for the Ammo Machine and press it **BEFORE** it is complete. This will cause the unfinished Ammo Machine to fall apart. J.J. must grab Weird Willie and toss him back in his pit at the lower right hand corner of the screen. But Weird Willie is very persistent and will try it again sooner or later.

J.J. also has to remember not to touch that same START BUTTON before he completes construction

of his Ammo Machine. It will fall apart just as fast and as surely if he touches it as it does when Weird Willie touches it.

Once the Ammo Machine is built, J.J. must push the START BUTTON for it (located at the lower left hand corner of the screen). Once this is done, the Ammo Machine will start firing at the ogre chasing J.J.'s girl friend across the top of the screen. You can move the Ammo Machine back and forth across the bottom of the screen at this time by moving the control stick left or right. It does not move up and down on the screen.

As your skill level increases and you get into the higher racks, the ogre runs faster, the bomb fuses are shorter, a maze monster will appear which can cause you to lose one man if you touch him (in which rack he appears is switch selectable), and you will lose first the far left exit from the maze and then the far right exit from the maze leaving only the center exit from the maze for all future racks. In general, each maze will be harder to complete than the one before.

A bonus man is awarded to you as you reach or pass a certain preselected point value (switch selectable).

WAYS IN WHICH YOU CAN LOSE A MAN (J.J.):

1. J.J. doesn't make it to the bomb disposal pit with a bomb, it goes off before he gets there. J.J., complete with halo, ascends to heaven. Assuming you have at least one J.J. in reserve, nothing happens to the parts of the Ammo Machine that you've already assembled on the BLUEPRINT.
2. The ogre catches J.J.'s girl friend. J.J.'s heart breaks and complete with halo, he ascends to heaven. Assuming you have at least one J.J. in reserve, nothing happens to the parts of the Ammo Machine that you've already assembled on the BLUEPRINT.
3. In the later racks, if J.J. should touch the maze monster. Then, complete with halo, J.J. ascends to heaven. Assuming you have at least one J.J. in reserve, nothing happens to the parts of the Ammo Machine that you've already assembled on the BLUEPRINT.
4. Any time J.J. is touched by a Killer Flower Pot. Then, complete with halo, J.J. ascends to heaven. Assuming you have at least one J.J. in reserve, nothing happens to the parts of the Ammo Machine that you've already assembled on the BLUEPRINT.

WHEN YOU LOSE YOUR LAST MAN (J.J.):

When you loose your last J.J. **GAME OVER PLAYER 1"** is written across the top center of the monitor screen. At this point several different things can happen depending on whether or not your score was high enough to cause the game to go into the High Score/Initial mode.

If your score was one of the ten highest of the day, the game will go into the High Score/Initial mode immediately. If your score is not high enough to cause the game to go into the High Score/Initial mode, it will either go to the Attract mode (if there are no more credits left in its memory) or into the Ready-To-Play mode (if there are still credits lefts in its memory).

HIGH SCORE/INITIAL MODE

In the High Score/Initial mode the game gives a display which looks like the following:

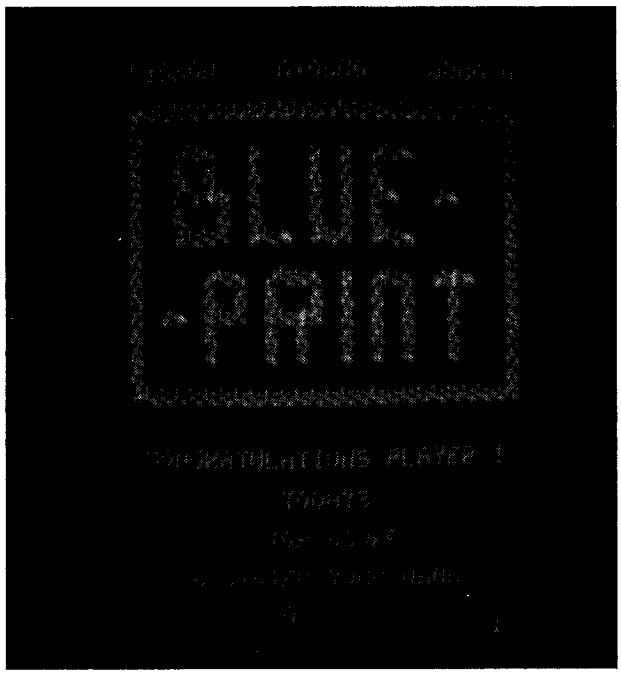

High Score/Initial Mode Display

When in the High Score/Initial mode, there is an "A" and two blank spaces displayed at the bottom center of the screen. By moving the controller stick to the right, the letter can be made to sequence forward through the alphabet: "A", "B", "C", "D", etc. By moving the controller stick to the left, the letter can be made to sequence backward through the alphabet: "Z", "Y", "X", "W", etc.

When you reach your initial, release the controller and push the FAST button. Your initial is frozen in place and an "A" appears in the blank space next to your first initial at the same time. Select this and your last initial in the same manner as you did your first initial. If you do not wish to put your initials opposite your score, just press the FAST button three times. Three "A"s will appear in the spaces at the bottom of the monitor screen where your initials would have gone.

After the High Score/Initial mode, the game will either go to the Attract mode (if there are no more credits left in its memory) or into the Ready-To-Play mode (if there are still credits left in its memory).

Most of the above holds true in the "2 PLAYER" mode also. But there are a few minor differences.

TWO PLAYER OPERATION

The Upright, Mini, and Cocktail Table models all have two player operation.

In the two player mode, the rules of play are the same as in the single player mode. There are some additional rules, however.

1. In the Upright and Mini models, the players must take turns at the controls.
2. In the Cocktail Table model, each player has his own set of individual controls. The picture will flip to face you when it is your turn. (When it is not your turn, your set of controls will have **NO** effect on the game.)
3. Your turn lasts until you lose one J.J. At this point, the game will do one of several things depending on whether or not the lost J.J. was your last or if you still have others remaining in reserve.

J.J. LOST — OTHERS STILL REMAINING IN RESERVE

- ☐ J.J., complete with halo, ascends to heaven.
- ☐ Next, the "RACK" changes to the "RACK" the other player is in, the "____ UP" flashes while what's left of the other player's Ammo Machine, his maze, and his J.J. appear on the monitor screen.
- ☐ Play begins for the other player.

J.J. LOST — NO OTHERS REMAINING IN RESERVE

- ☐ Game displays "GAME OVER PLAYER ____".
- ☐ J.J., complete with halo, ascends to heaven.
- ☐ Next, the "RACK" changes to the "RACK" the other player is in, the "____ UP" flashes while what's left of the other player's Ammo Machine, his maze, and his J.J. appear on the monitor screen.
- ☐ Play begins for the other player.
- ☐ After the last player's last J.J. is lost, the game displays "GAME OVER PLAYER ____" for him too.
- ☐ If neither of your scores is high enough to cause the game to go into the High Score/Initial mode, the game will then either go to the Attract mode (if there are no more credits left in its memory) or into the Ready-To-Play mode (if there are still credits left in its memory).
- ☐ On the other hand, if one or both of your scores was high enough to cause the game to go into the High Score/Initial mode, the game will tell you this by giving a display like that shown previously. The number "1" or "2" is displayed where the blank space is to indicate which player should enter his initials at this time.
- ☐ After you've entered your initials opposite your score(s), the game will then go to the list of high scorers after which it will either go to the Attract mode (if there are no more credits left in its memory) or into the Ready-To-Play mode (if there are still credits left in its memory).

IV. Maintenance and Repair

Your **NEW** game needs certain types of maintenance to keep it in good working order. **CLEAN,** well **MAINTAINED** games **attract players** and **EARN MORE PROFITS.**

The most important thing for you to remember is to play your game thoroughly EVERY TIME you collect money from the coin box. **JUST LOOKING** at your game **WILL NOT** tell you if all its controls and inside parts are working correctly. **ONLY** being familiar with and playing your game will inform you whether or not it is working the way it should.

The second most important thing you should remember is to clean the outside of the game and coin acceptor mechanisms on a regular basis.

CLEANING

The outside of the game cabinet plus the metal can be cleaned with any non-abrasive household cleaner. However, the front of the T.V. monitor tube and **both sides** of all other glass and plastic on or in the game MUST be cleaned with anti-static cleaner **ONLY.** For cleaning the coin acceptors: hot soapy water may be used on the plastic ones and any household cleanser may be used on the metal ones. If you wish, special coin machine cleaners that leave no residue may be purchased from your distributor.

DO NOT dry-wipe any of the plastic panels. This is because any dust that was on them can scratch their surfaces. If this has happened, anyone looking through this type of damaged plastic would feel he was looking at the game through a fog. This fogging damage CANNOT be repaired or reversed. The ONLY solution is to **replace** the damaged piece of plastic.

FUSE REPLACEMENT

This game contains several fuses located as shown in Figure 4-1.

1. **UPRIGHT MODEL:**
   As viewed from the back, facing the cabinet, with the rear access door removed; the fuses are located on the Transformer and Power Supply Board Assemblies.
2. **MINI MODEL:**
   As viewed from the back, facing the cabinet, with the rear access door removed; the fuses are located on the Transformer and Power Supply Board Assemblies.
3. **COCKTAIL TABLE MODEL:**
   As viewed from the coin door side of the cabinet, with the monitor tilted open to one side; the fuses are located on the Transformer and Power Supply Board Assemblies.

Replace fuses **ONLY** with the type and size listed in the Illustrated Parts Breakdown Section of this manual.

See the T.V. Monitor Manual (available on request from your distributor or the monitor manufacturer) and/or the T.V. Troubleshooting Section of this manual for information on these fuses.

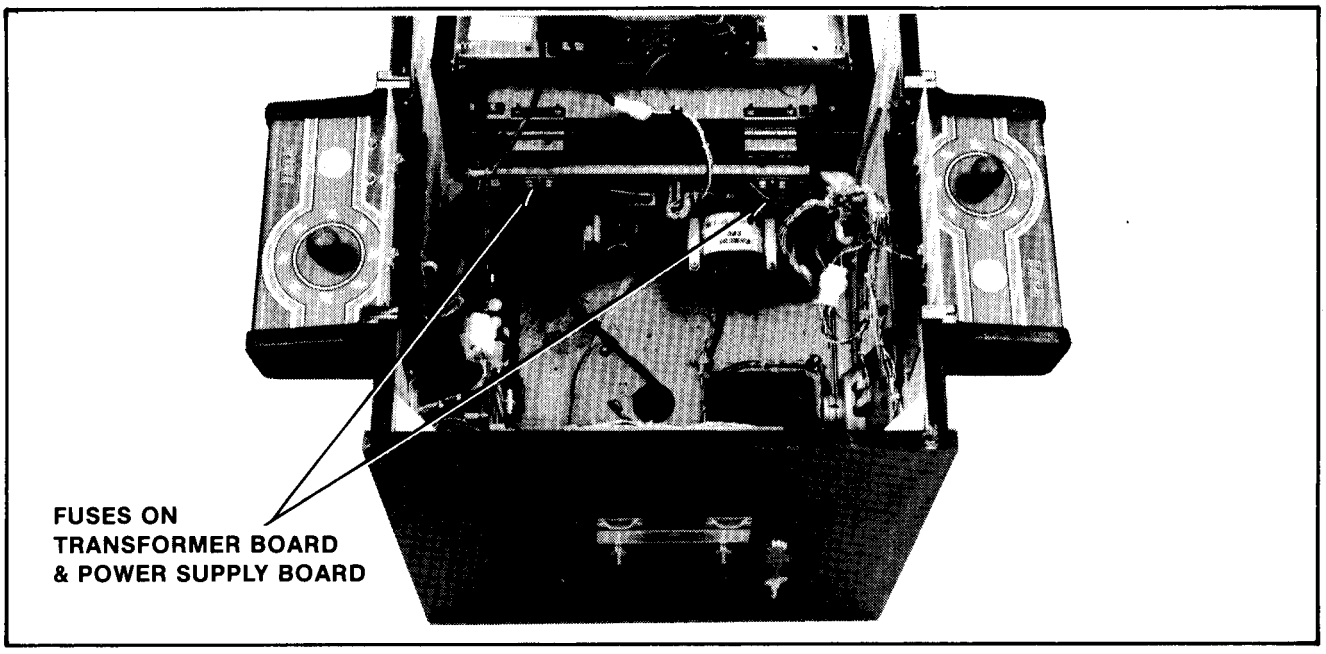

Figure 4-1 Location of Fuses

OPENING THE CONTROL PANEL

1. **UPRIGHT MODEL:** See Figure 4-2.

- ☐ The control panel is held in place by three latches, one on the left side, one on the right side, and one on the front center.

  They are spring loaded to provide constant positive pressure on their latch plates.

  They can be reached through the coin door **AFTER turning power to the game off.**

  To release the latches, lift up and toward the center of the control panel.

  Once they are released, unhook them from their latch plates.

- ☐ To remove the control panel:

  Raise it up and tilt it toward you until you can see the cable behind it.

  Cradling the control panel between yourself and the cabinet, disconnect it from its cabling.

  The control panel is now free and can be removed.

- ☐ To reinstall the control panel, reverse this procedure.

2. **MINI MODEL:** See Figure 4-2.

- ☐ The control panel is held in place by two latches, one on the right side, and one on the left side of the cabinet.

  They are spring loaded to provide constant positive pressure on their latch plates.

  They can be reached through the coin door **AFTER turning power to the game off.**

  To release the latches, lift up and toward the center of the control panel.

  Once they are released, unhook them from their latch plates.

- ☐ To remove the control panel:

  Raise it up and tilt it toward you until you can see the cable behind it.

  Cradling the control panel between yourself and the cabinet, disconnect it from its cabling.

  The control panel is now free and can be removed.

- ☐ To reinstall the control panel, reverse this procedure.

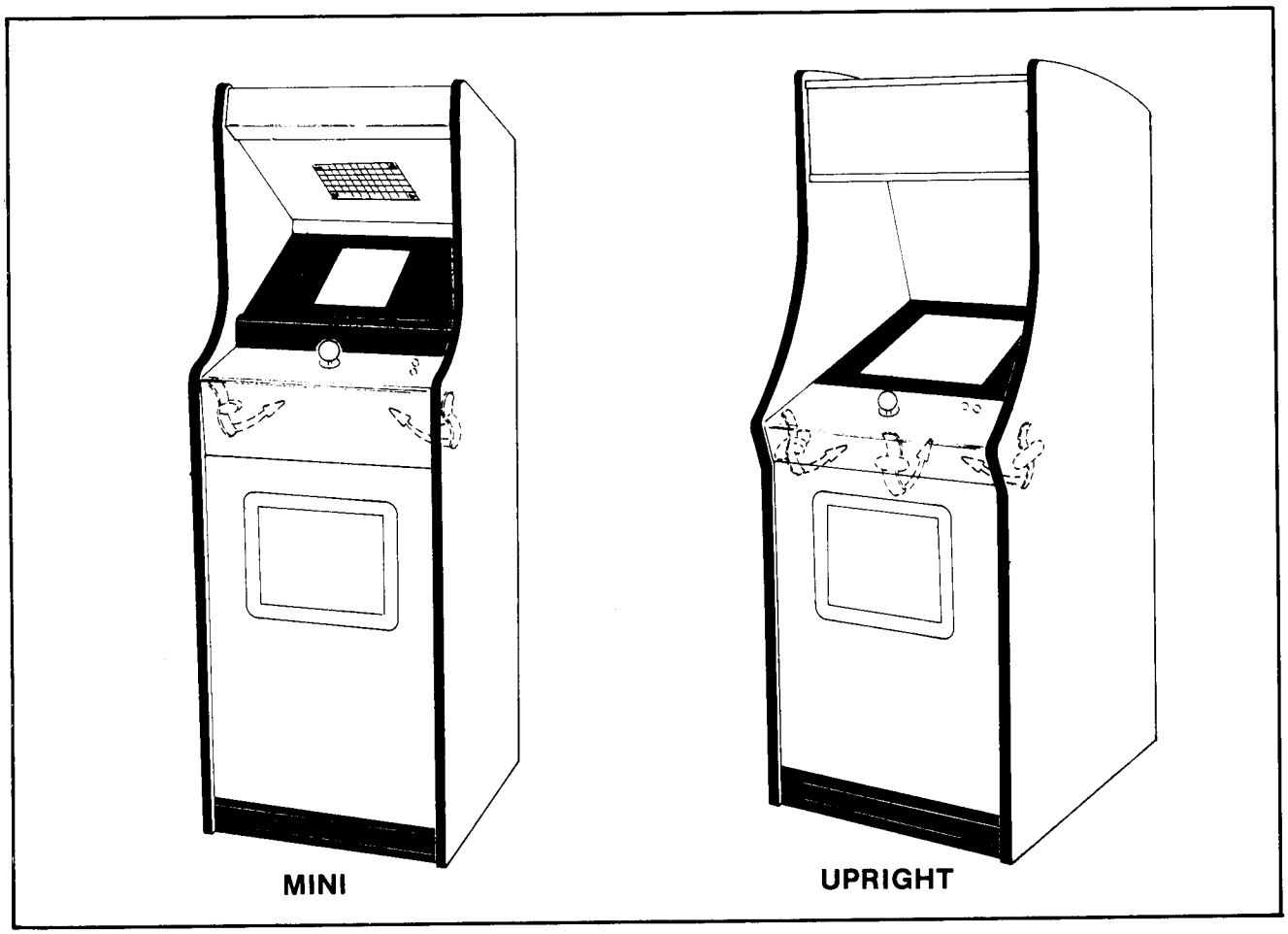

Figure 4-2 Opening the Control Panel — Upright & Mini

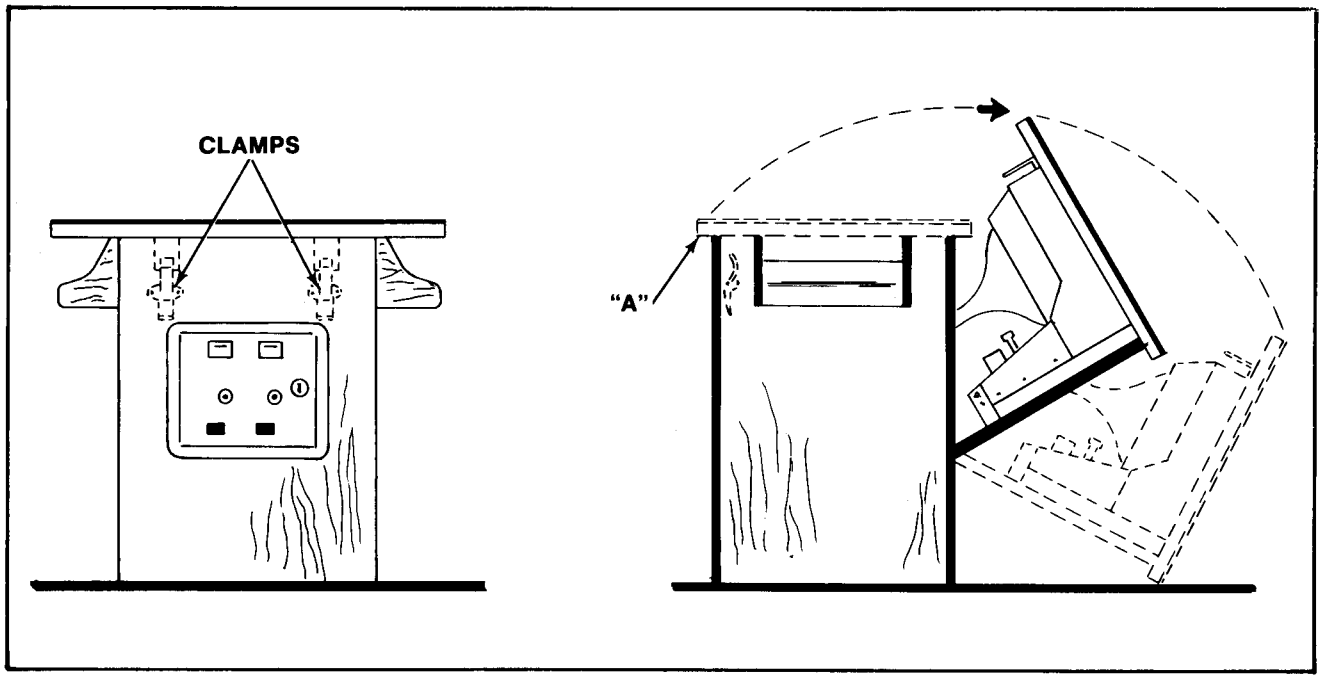

Figure 4-3 Opening the Cocktail Game

3. COCKTAIL TABLE MODEL: See Figure 4-4.

☐ Each control panel is held in place by several screws, two on the inside of the cabinet and three along the outside bottom edge of the control panel.

Turn power to the game off.

Open the coin box door and release the two latches indicated in Figure 4-3.

CAUTION: The right hand latch is very close to the HIGH VOLTAGE on the monitor.

Once they're released, unhook them from their latch plates.

Grasp the table top at "A" and open it as indicated in Figure 4-3.

CAUTION: Due to the weight of the monitor, EXTREME CARE MUST be taken when opening the cabinet.

Remove the screws which secure the control panel in place. See Figure 4-4.

☐ To remove the control panel(s):

Disconnect it from its cabling.

The control panel is now free and can be removed.

☐ To reinstall the control panel, reverse this procedure.

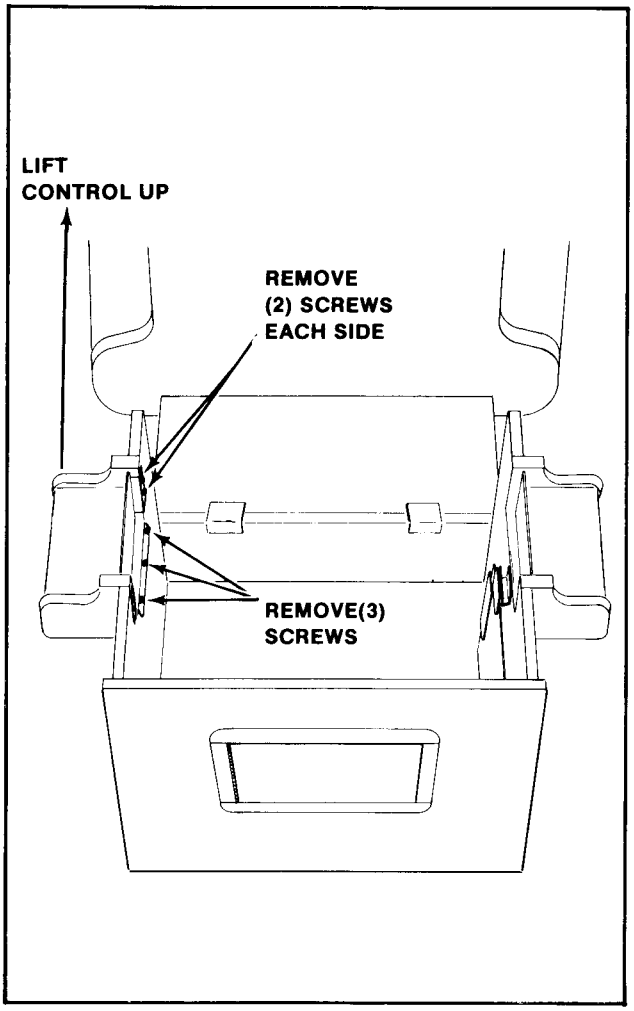

Figure 4-4 Removing the Control Panel — Cocktail

REMOVAL OF THE MAIN-DISPLAY-GLASS AND/OR THE T.V. BEZEL ASSEMBLY

1. UPRIGHT MODEL: See Figure 4-5.

NOTE: In order to do this, the control panel **MUST** be removed first. See the "UPRIGHT MODEL" procedure.

- ☐ **Turn the power to the game off** and remove the control panel. This frees the main-display-glass so it can be lifted off.
- ☐ By putting your finger in the hole in the middle of the main-display-glass support, you can lift it up and out.
- ☐ Loosen the screws which secure the T.V. bezel-glass-clamps in place.

  Move the clamps to the side and the bezel glass may be removed.

  Remove the above mentioned screws and the bezel with four bezel-glass-clamps may be removed.
- ☐ To reinstall the T.V. bezel assembly and the main-display-glass, reverse this procedure.

2. MINI MODEL: See Figure 4-6.

NOTE: In order to do this, the control panel **MUST** be removed first. See the "MINI MODEL" procedure.

- ☐ **Turn the power off to the game** and remove the control panel.
- ☐ Remove the screws which secure the glass clamping plate.
- ☐ Lift out the glass clamping plate. This frees the main-display-glass so it can be lifted up.
- ☐ By putting your finger in the hole in the middle of the main-display-glass support, you can lift it up and out.
- ☐ Remove the screws which secure the T.V. bezel assembly and lift it out.

NOTE: Use the hole in the center of the main-display-glass support to grasp it.

- ☐ Reverse this procedure to reinstall the T.V. bezel assembly and the main-display-glass.

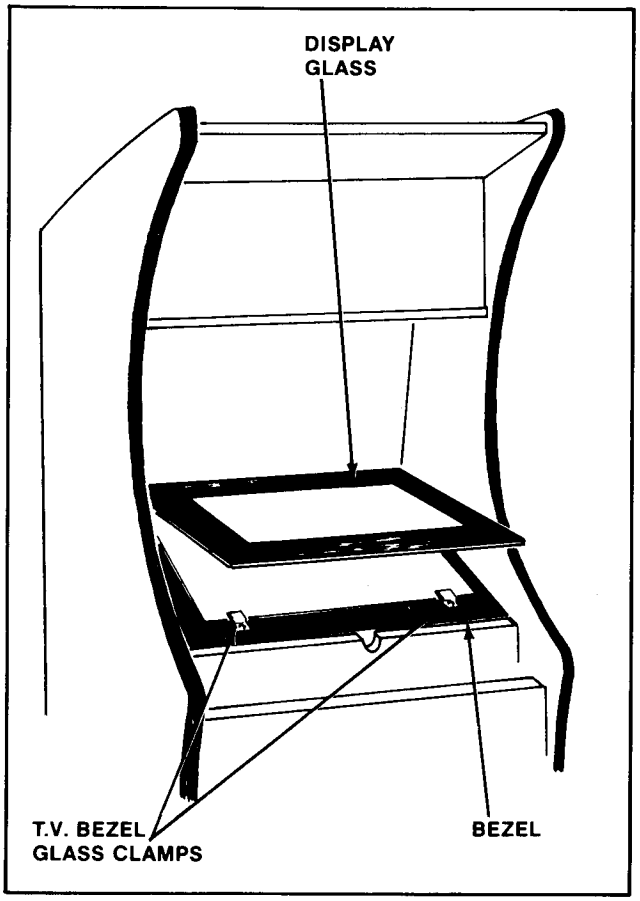

Figure 4-5 Removal of Main Display Glass & T.V. Bezel — Upright

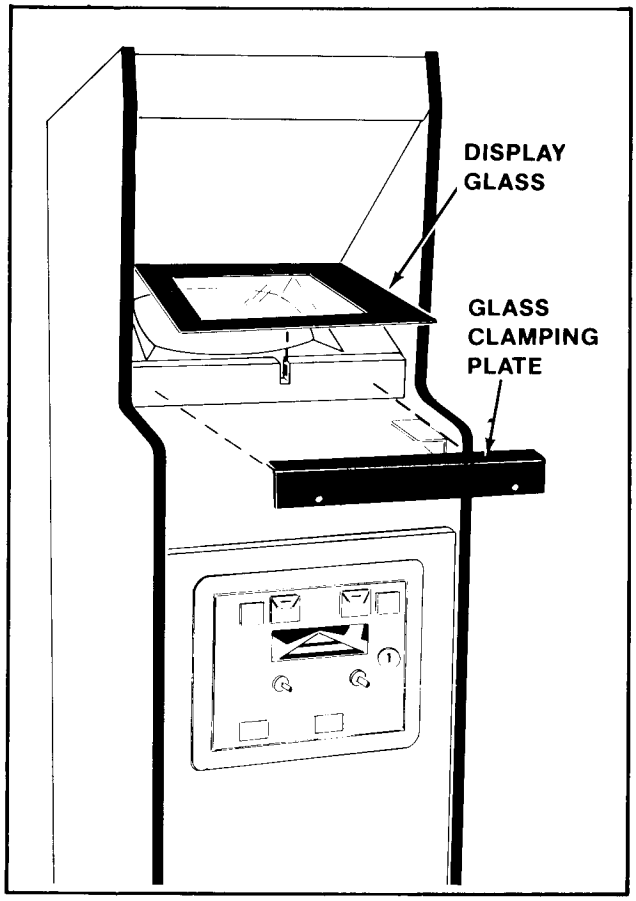

Figure 4-6 Removal of Main Display Glass & T.V. Bezel — Mini

3. **COCKTAIL TABLE MODEL:** See Figure 4-7.

   NOTE: This may be done with the table top in the open or the closed position. If you decide to open the table top, **TURN THE POWER TO THE GAME OFF FIRST.**

   ☐ Remove the screws which secure the table top glass clamps in place.

   ☐ Remove the table top glass.

   ☐ Loosen the screws which secure the T.V. bezel-glass-clamps in place.

   Move the clamps to the side and the bezel glass may be removed.

   Remove the screws which secure the bezel assembly to the table top and the bezel with four bezel-glass-clamps may be removed.

   ☐ To reinstall the T.V. bezel assembly and the table top glass, reverse this procedure.

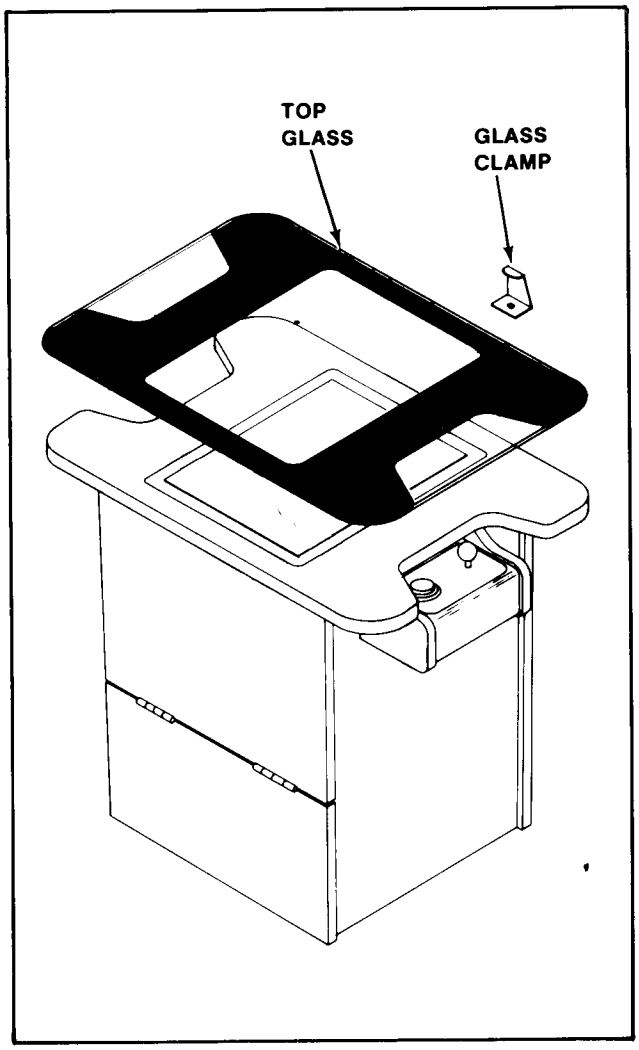

Figure 4-7 Removing Top Glass — Cocktail

T.V. MONITOR REPLACEMENT

CAUTION: High voltages may exist in any television unit, even with the power disconnected. Use EXTREME CAUTION and do not touch electrical parts or the T.V. yoke area with your hands or with metal objects held in your hands!

In addition, BE SURE TO USE HEAVY GLOVES when handling the monitor. You could cut your hands on the metal T.V. chassis without such protection.

DANGER: The T.V. monitor DOES NOT contain an isolation transformer on its chassis (it is mounted instead on the floor of the cabinet). When servicing the monitor on a test bench, YOU MUST ISOLATE THE MONITOR FROM AC VOLTAGE WITH AN ISOLATION TRANSFORMER.

1. **UPRIGHT MODEL:** See Figure 4-8.

   ☐ **Turn power off to the game.**

   ☐ Open the rear access door.

   ☐ Completely disconnect the T.V. monitor from all its cabling. **DON'T FORGET THE CHASSIS GROUND WIRE.**

   Before removing the T.V. monitor, the main-display-glass **MUST** be removed. See above "Upright Model" procedure.

   With the removal of only four bolts, the T.V. monitor and its mounting channels will be loose.

   The monitor mounting channels slide on top of and against two metal guides mounted to the cabinet's right and left sides. The monitor is removed by sliding it out the back of the cabinet.

   To reinstall the T.V. monitor, reverse this procedure.

   After replacing the T.V. monitor, be sure to run the game Self-Test.

2. **MINI MODEL:** See Figure 4-9.

   ☐ **Turn the power off to the game.**

   ☐ Open the rear access door.

   ☐ Completely disconnect the T.V. monitor from all its cabling. **DON'T FORGET THE CHASSIS GROUND WIRE.**

   Before removing the T.V. monitor, the main-display-glass and bezel **MUST** be removed. See above "Mini Model" procedure.

   With the removal of only four nuts, the T.V. monitor will be loose.

CAUTION: BE SURE to support the T.V. monitor from the rear while removing the four bolts so it will not fall out of the cabinet.

The monitor is removed by supporting it and pulling straight back.

☐ To reinstall the T.V. monitor, reverse this procedure.

After replacing the T.V. monitor, be sure to run the game Self-Test.

3. COCKTAIL TABLE MODEL: See Figure 4-11.

☐ **Turn the power off to the game.**

Open the coin box door and release the two latches indicated in Figure 4-10.

CAUTION: The right hand latch is very close to the HIGH VOLTAGE on the monitor.

☐ Once the latches are released, unhook them from their latch plates.

☐ Grasp the table top at "A" and open it as indicated in Figure 4-10.

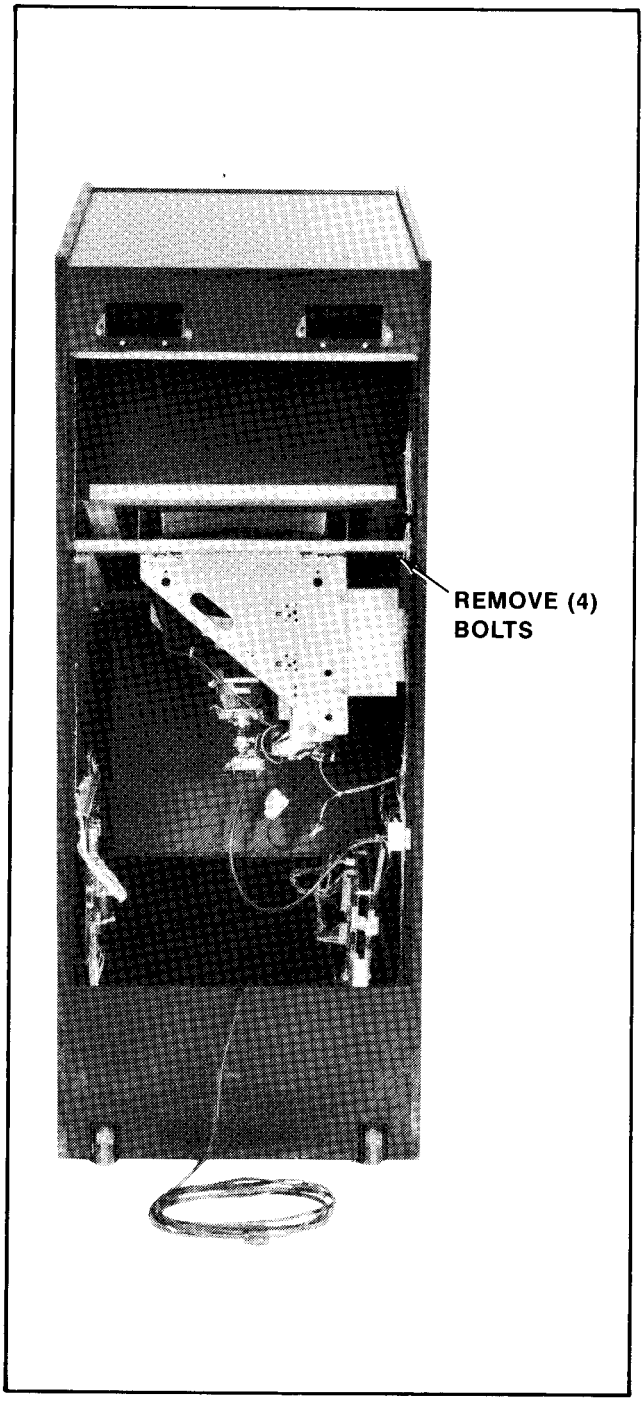

Figure 4-8 Removing Monitor — Upright

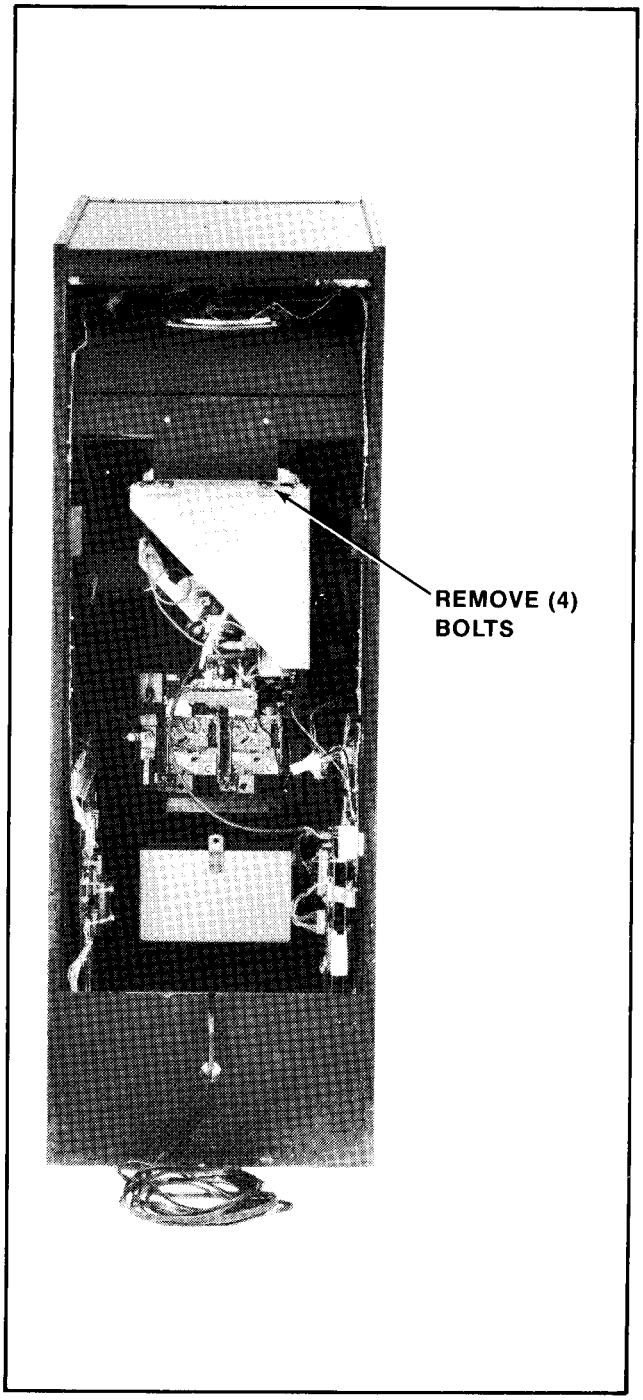

Figure 4-9 Removing Monitor — Mini

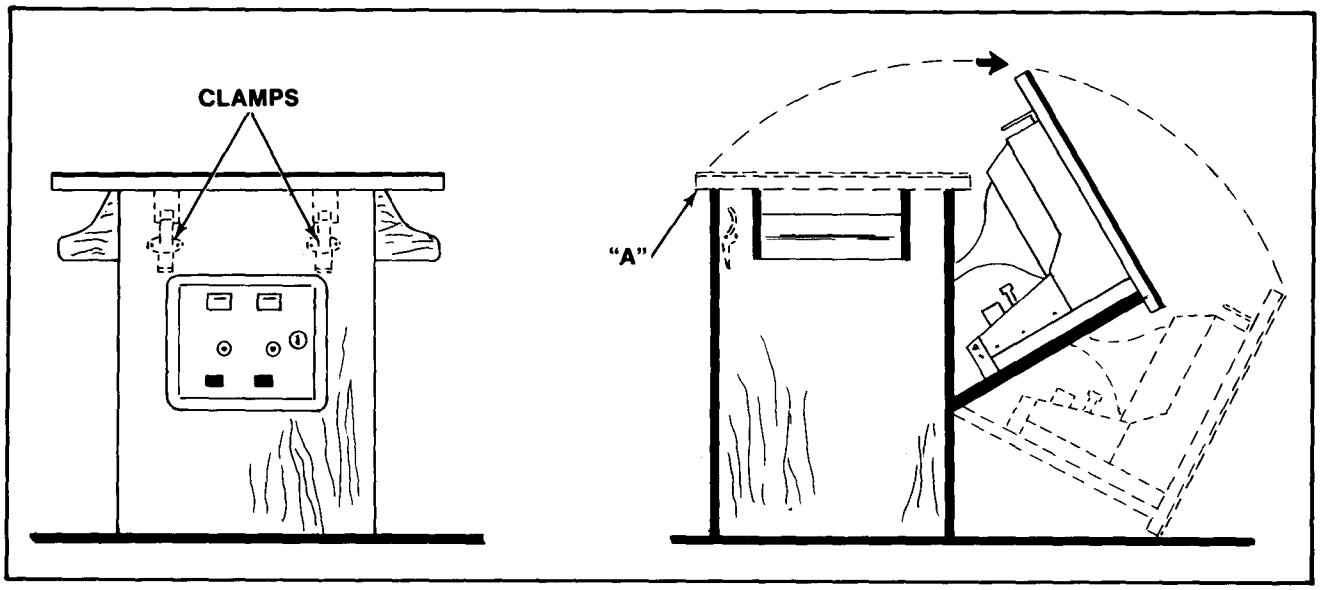

Figure 4-10 Opening the Cocktail Game

CAUTION: Due to the weight of the monitor, EXTREME CARE MUST be taken when opening the cabinet.

- ☐ Remove the screws which hold the table top glass clamps in place.
- ☐ Remove the table top glass.
- ☐ Lift out the T.V. bezel assembly.
- ☐ Completely disconnect the T.V. monitor from all its cabling. **DON'T FORGET THE CHASSIS GROUND WIRE.**
- ☐ Remove the screws holding the T.V. monitor chassis to the "L" brackets by the door hinge(s). See Figure 4-11.
- ☐ Close the Cocktail Table and re-latch it.
- ☐ Remove the screws which secure the T.V. monitor mounting brackets to the edges of the slot cut in the table top. See Figure 4-11.
- ☐ Pry up the end of each monitor mounting bracket with a screwdriver or similar tool until you can grasp them both.
- ☐ Lift the T.V. monitor straight up and out of the table top being VERY CAREFUL not to bump the neck of the picture tube.
- ☐ To reinstall the T.V. monitor assembly, reverse this procedure.
- ☐ Be sure to check the clearance of the "L" brackets BEFORE setting the monitor into the table top.
- ☐ After replacing the T.V. monitor, be sure to run the game Self-Test.

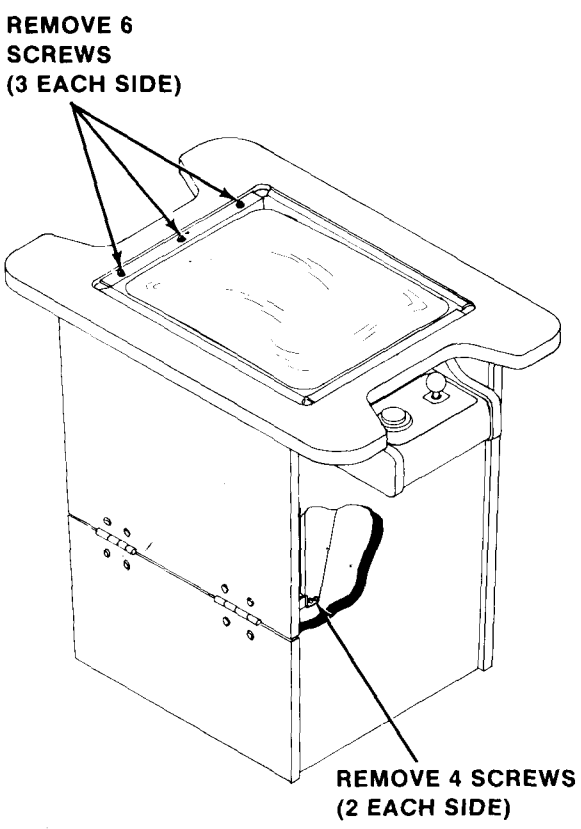

Figure 4-11 Removing Monitor — Cocktail

PRINTED CIRCUIT BOARD (P.C.B.) REPLACEMENT

NOTE: P.C.B.'s are all keyed and will ONLY fit into their connectors one way without forcing them. The plugs on the cable harness which connect it to the P.C.B.'s are also keyed and will ONLY go onto their connectors one way without forcing them.

1. **UPRIGHT MODEL:** See Figure 4-12.
   - ☐ **Turn the power to the game off.**
   - ☐ Unlock and open the rear access door (game board) and the coin door (sound board).
   - ☐ Disconnect the game board from all its cabling.
   - ☐ Disconnect the sound board from all its cabling.
   - ☐ Remove the indicated P.C.B. supports and lift the above P.C.B.'s out the cabinet.
   - ☐ Disconnect the power supply board from all its cabling, remove the P.C.B. supports indicated in Figure 4-12, and slide it out the back of the cabinet.
   - ☐ To reinstall the above P.C.B.'s, reverse this procedure.

2. **MINI MODEL:** See Figure 4-13.
   - ☐ **Turn the power off to the game.**
   - ☐ Unlock and open the rear access door.
   - ☐ Disconnect the game board from all its cabling.
   - ☐ Disconnect the sound board from all its cabling.
   - ☐ Remove the indicated P.C.B. supports and lift the above P.C.B.'s out of the cabinet.
   - ☐ Disconnect the power supply board from all its cabling, remove the P.C.B. supports indicated in Figure 4-13, and slide it out the back of the cabinet.
   - ☐ To reinstall the above P.C.B.'s, reverse this procedure.

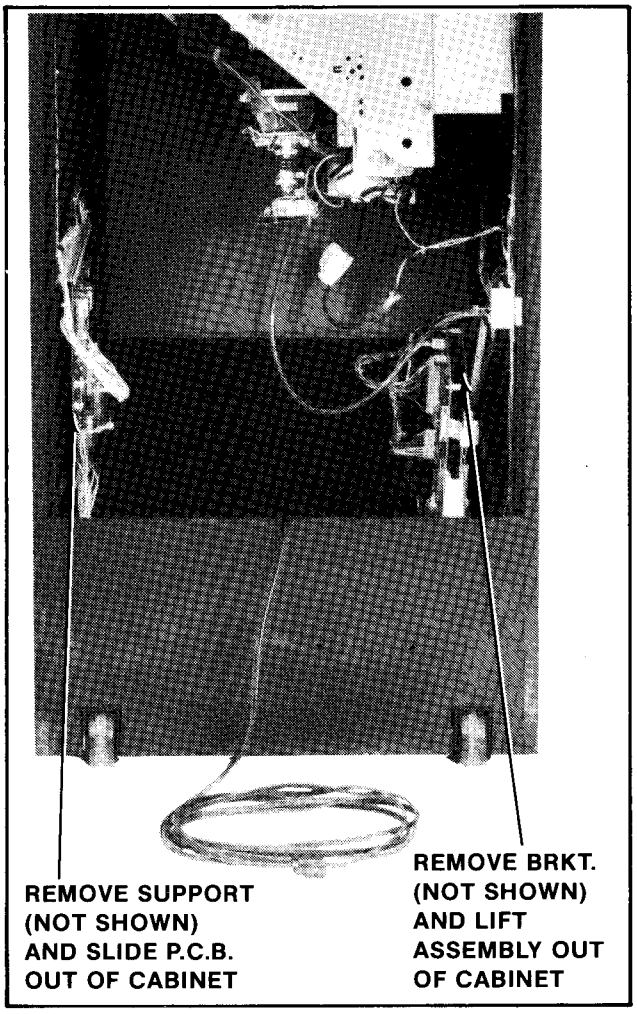

Figure 4-12 Replacing P.C.B.s — Upright

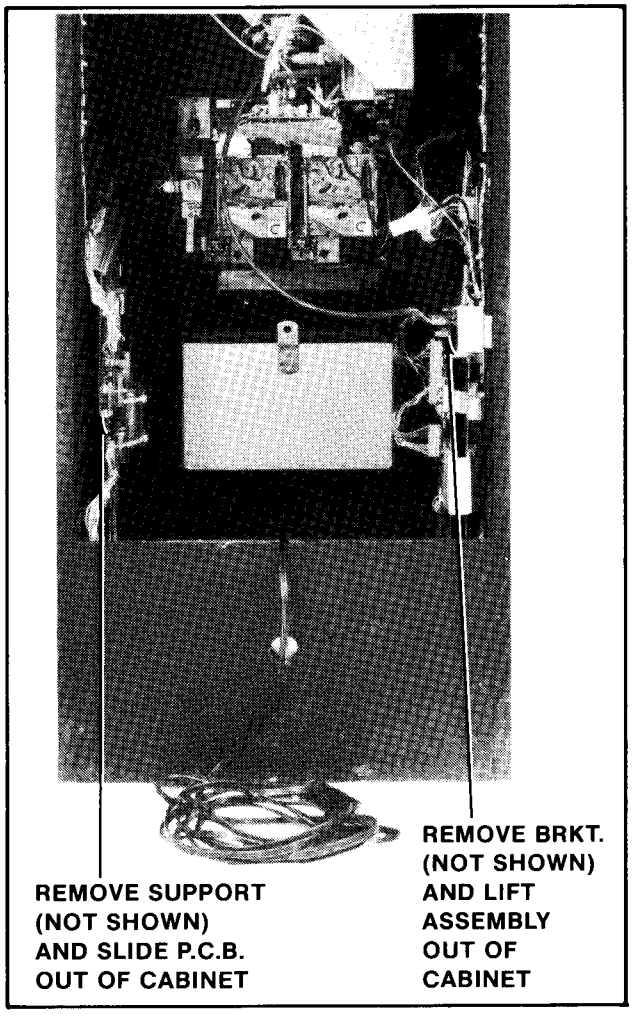

Figure 4-13 Replacing P.C.B.s — Mini

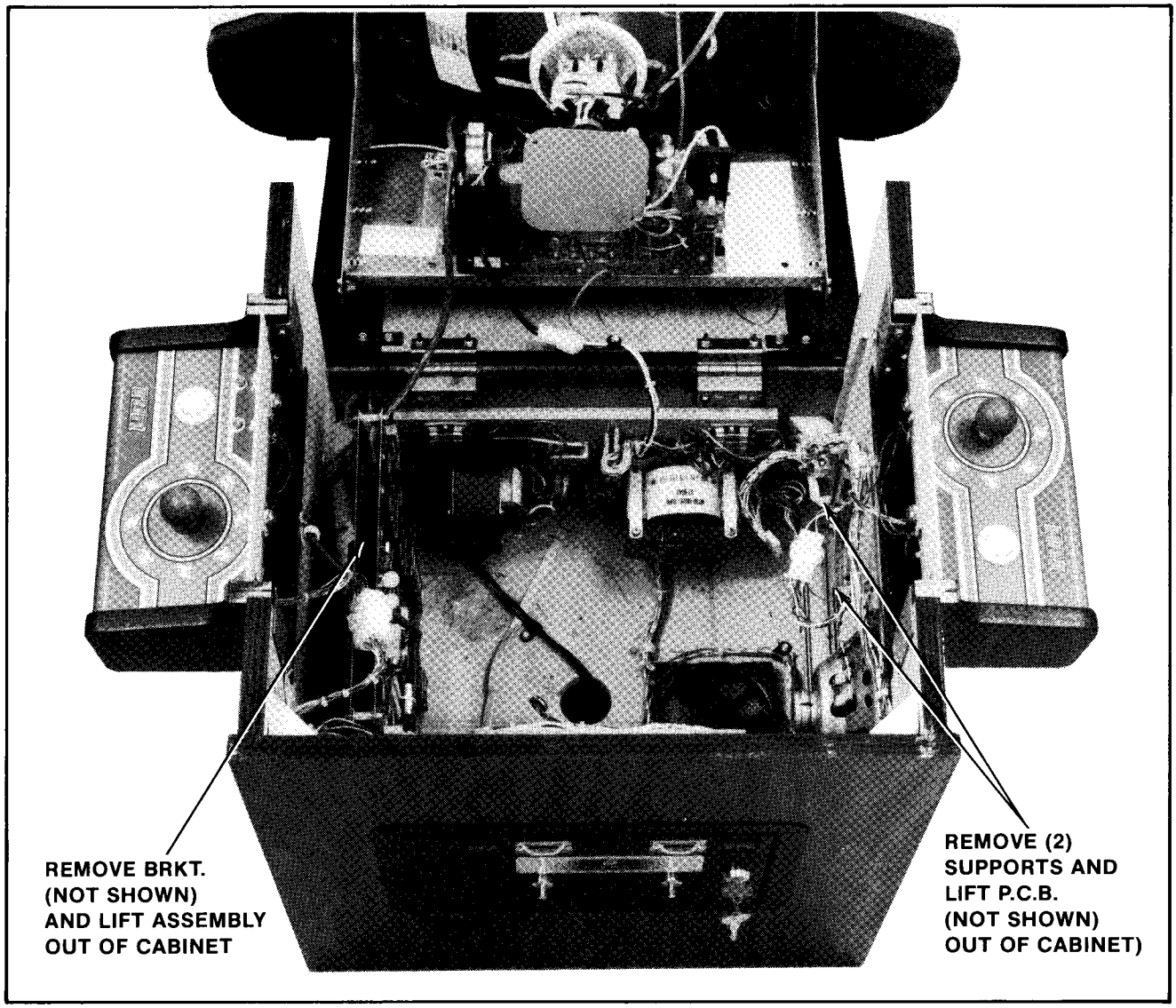

Figure 4-14 Replacing P.C.B.s — Cocktail

3. **COCKTAIL TABLE MODEL:** See Figure 4-14.

   ☐ **Turn the power off to the game.**

   ☐ Open the cabinet:
   Open the coin box door and release the two latches indicated in Figure 4-10.

CAUTION: The right hand latch is very close to the HIGH VOLTAGE on the monitor.

   Once they're released, unhook them from their latch plates.

   ☐ Grasp the table top at "A" and open it as indicated in Figure 4-10.

CAUTION: Due to the weight of the monitor, EXTREME CARE MUST be taken when opening the cabinet.

   ☐ To remove the power supply board. See Figure 4-14.
   Disconnect it from all its cabling.
   Remove the two smallest P.C.B. supports.
   Once these are removed, the power supply can be lifted out the top of the cabinet.
   To reinstall the power supply board, reverse this procedure.

   ☐ To remove the game and sound boards. See Figure 4-14.
   Disconnect the game board from all its cabling.
   Disconnect the sound board from all its cabling.

   ☐ Remove the indicated P.C.B. supports and lift the above P.C.B.'s out of the cabinet.
   To reinstall the game and sound boards, reverse this procedure.

OPENING THE ATTRACTION PANEL

1. **UPRIGHT MODEL:** See Figure 4-15.

   ☐ **Turn the power to the game off.**

   ☐ Opening the attraction panel:

   Remove the screws which secure the top bracket in place. (They are on its top side.)

   Remove the top bracket and slide up the attraction panel. This exposes the attraction panel fluorescent light tube and its mounting bracket assembly.

   To reinstall the attraction panel, reverse this procedure.

   ☐ The fluorescent light tube may be replaced at this time. BE CAREFUL NOT TO DROP IT.

WARNING: If you drop a fluorescent tube and it breaks, IT WILL IMPLODE! Shattered glass can fly six (6) feet or more from the implosion. Use care when replacing any fluorescent tube.

   ☐ Replacing the fluorescent tube starter. See Figue 4-16.

   Be sure the power to the game has been turned off.

   Grasp the starter (it is on the back of the mounting bracket), give it a quarter turn, and remove it from its socket.

   To replace the fluorescent light tube starter, reverse this procedure.

   ☐ Replacement of the fluorescent tube mounting bracket assembly.

   Be sure the power is off to the game.

   Disconnect it from its power cable.

   Remove the screws which secure it and gently slide it out of the front of the cabinet, being careful not to catch its power cable on anything.

   To reinstall the fluorescent tube mounting bracket assembly, reverse this procedure.

   ☐ Replacing the speaker.

   Be sure the power is off to the game.

   Remove the attraction panel and disconnect the speaker from its cabling.

   Remove the nuts and bolts which secure the speaker and speaker grill in place and set them and the speaker grill aside.

   Once the bolts which secure the speaker in place are removed, the speaker may be removed through the opening where the attraction panel was.

   Reverse this procedure to reinstall the speaker.

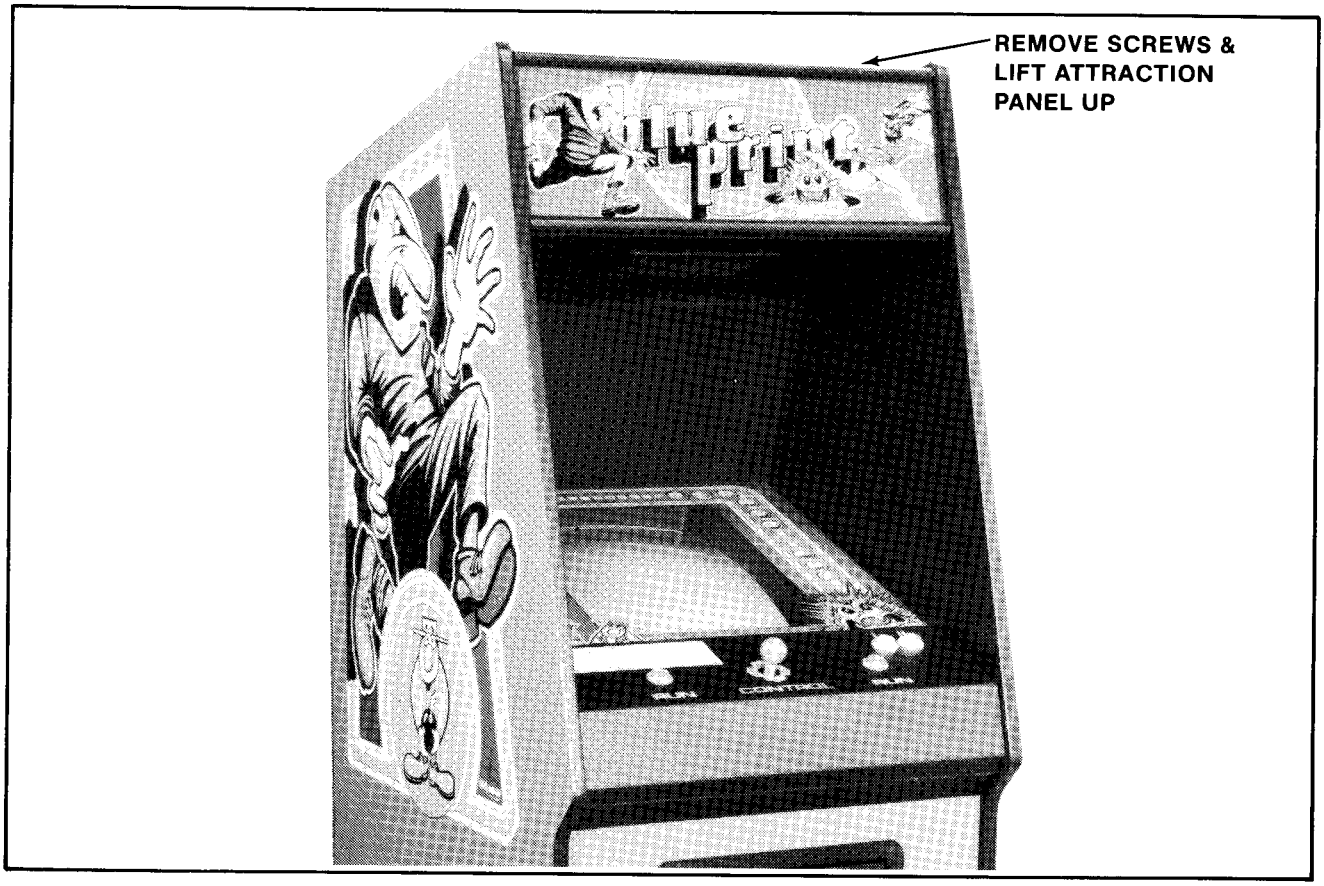

Figure 4-15 Opening the Attraction Panel — Upright

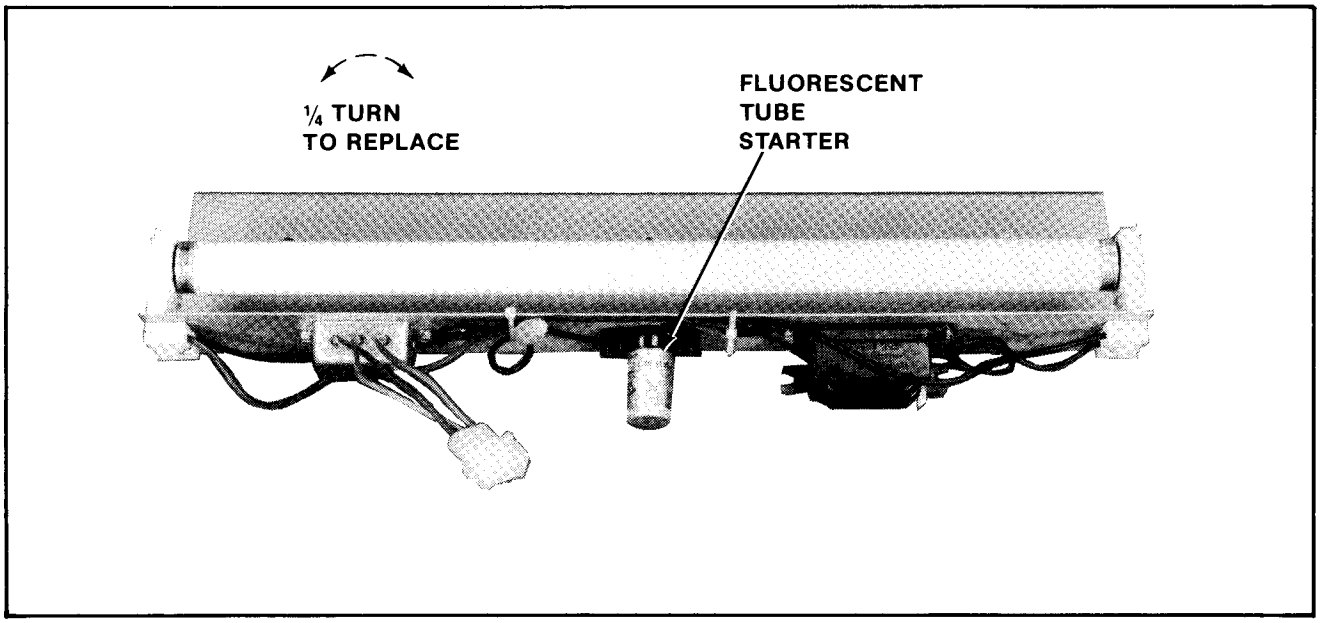

Figure 4-16 Replacing Fluorescent Tube Starter — Upright

2. **MINI MODEL.** See Figure 4-17.

   ☐ **Turn the power off to the game.**

   ☐ Remove the screws which secure the top bracket in place. (They are on its top side.)

   ☐ Remove the top bracket and slide up the attraction panel. This exposes the attraction panel light bulbs and their mounting board.

   ☐ To service the light bulbs and their mounting board:

   Turn the power to the game back on so you can see which bulbs are burnt out.

   Mark the burnt out bulbs and **turn the power to the game back off again.**

   To replace the burnt out bulbs, grasp them gently and pull straight out.

   The new bulbs are gently pushed into the empty sockets.

   To completely replace the light bulb mounting board:

   Open the cabinet rear access door and unplug the mounting board from its power cable.

   Remove the screws that hold the mounting board to the cabinet.

   Gently slide the mounting board out the front of the cabinet being careful not to catch its cable on anything.

   To reinstall the above removed items, reverse this procedure.

   ☐ To replace the speaker.

   Be sure the power is off to the game.

   Disconnect the speaker from its cabling.

   Remove the nuts and bolts securing the speaker.

   Slide the speaker out through the rear access door.

   To reinstall the speaker, simply reverse this procedure.

3. **THE COCKTAIL TABLE MODEL HAS NO BACK-LIT ATTRACTION PANEL.**

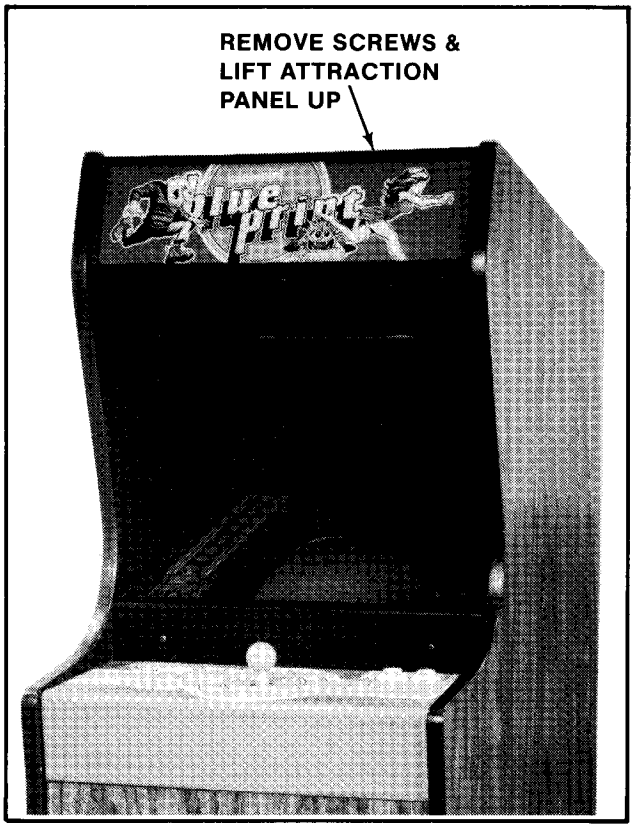

Figure 4-17 Opening the Attraction Panel — Mini

V Illustrated Parts Breakdown

BLUEPRINT — TRANSFORMER BOARD ASSEMBLY — NO PHOTOGRAPH

*ORDER BY PART NUMBER **ONLY***

ITEM	PART NO.	DESCRIPTION
	MT00-00087-0000	POWER TRANSFORMER — 120/240V. (UPRIGHT & MINI)
	MT00-00092-0000	TRANSFORMER (UPRIGHT & MINI)
	MT00-00091-0000	SHIELDED TRANSFORMER — 115/120V (COCKTAIL ONLY)
	MT00-00093-0000	TRANSFORMER W/MAGNETIC SHIELD (COCKTAIL ONLY)
	0720-00001-0100	1 POSITION FUSE CLIP ASSY. (MINI ONLY)
	0720-00001-0200	2 POSITION FUSE CLIP ASSY. (ALL)
	0720-00001-0300	3 POSITION FUSE CLIP ASSY. (UPRIGHT & COCKTAIL)
	0017-00003-0002	1/2A., 250V. SLO-BLO FUSE (1 REQ'D. — UPRIGHT & COCKTAIL)
	0017-00003-0004	2A., 250V. SLO-BLO FUSE (2 REQ'D. — UPRIGHT, 3 REQ'D. — MINI & COCKTAIL)
	0017-00003-0177	3/4A., 250V. SLO-BLO FUSE (1 REQ'D. — UPRIGHT)
	0017-00003-0217	2-1/2A., 250V. SLO-BLO FUSE (1 REQ'D. — UPRIGHT, COCKTAIL & MINI)
	0017-00021-0634	2 POSITION TERMINAL STRIP
	A151-00079-0000	115V. CONVENIENCE OUTLET ASSY.
	A508-00037-0000	2 LEAD TRANSFORMER BOARD FILTER ASSY.
	A089-00014-0000	LINE CORD CABLE ASSY.
	3010-03003-0000	GROUNDING CLIP (2 REQ'D.)
	3000-17246-0500	5-1/2" LG. — GROUND STRAP (UPRIGHT & COCKTAIL)
	3000-17246-0900	48" LG. — GROUND STRAP (UPRIGHT ONLY)
	3000-17246-0300	GROUND STRAP (COCKTAIL ONLY)
	3000-17246-0200	GROUND STRAP (MINI ONLY)
	3000-17246-1000	36" LG. — GROUND STRAP (MINI ONLY)

NO. 300 — BLUEPRINT — UPRIGHT — FRONT

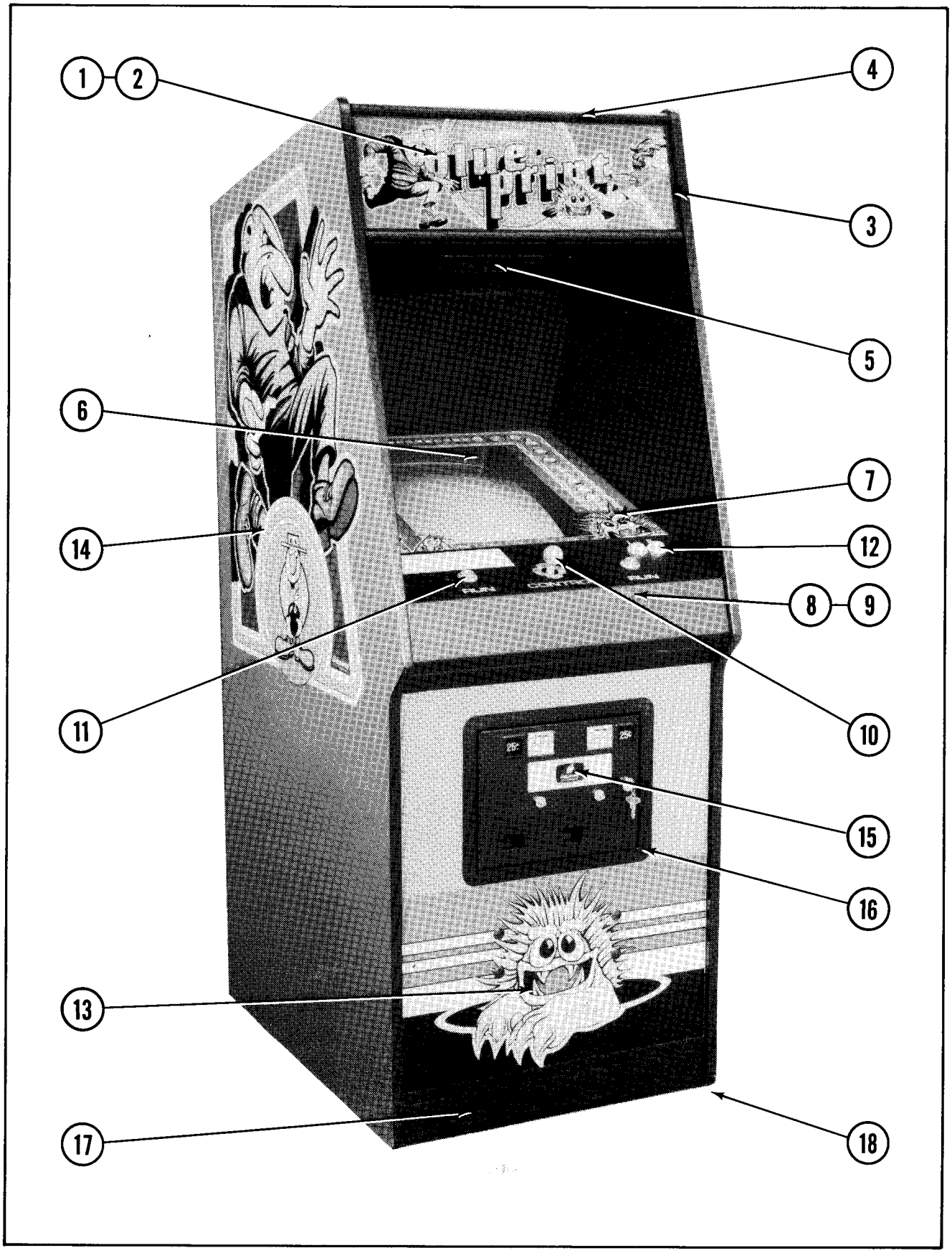

NO. 300 — BLUEPRINT — UPRIGHT — FRONT — PARTS LIST

*ORDER BY PART NUMBER **ONLY***

ITEM	PART NO.	DESCRIPTION
1	0300-00901-00XF	HEADER DISPLAY PLEXI
2	A595-00011-0000	HEADER LIGHT ASSY.
3	0537-00903-0058	GLASS CHANNEL — 6-15/16" LG. (2 REQ'D.)
4	0574-00903-0100	HEADER BRKT. RETAINER (2 REQ'D.)
	0017-00101-0138	#8 x 5/8 TORX TAMPER PROOF PAN HD. SCR. (6 REQ'D.)
	0017-00009-0522	LONG ARM KEY T-20 (FOR ABOVE SCREW)
5	0017-00003-0430	6" x 9" SPEAKER — 4 OHM, 10W.
	0017-00009-0393	BLACK SPEAKER GRILL W/SLOTS
	0017-00101-0127	#8-32 x 1-1/2" CARRIAGE BOLT (4 REQ'D.)
	0017-00103-0061	#8-32 HEX NUT W/SEMS (4 REQ'D.)
6	0508-00900-0000	19" T.V. BEZEL
7	0300-00900-00XF	MAIN VIEWING GLASS
	0508-00108-0000	GLASS STOP BRKT. (CABINET REAR)
	0017-00101-0027	#8 x 3/4 SLT. HEX HD. M.S. (3 REQ'D.)
8	0300-00902-0000	CONTROL SHELF OVERLAY — DECORATIVE
9	A300-00015-0000	CONTROL SHELF PLATE ASSY. — WELDED
	0982-00102-00XF	STRIKE (2 REQ'D.)
	0017-00009-0033	LATCH CLAMP (3 REQ'D.)
	0550-00101-0100	CONTROL SHELF MTG. BRKT. — RIGHT
	0550-00101-0200	CONTROL SHELF MTG. BRKT. — LEFT
	0555-00901-0000	PLASTIC LOCATING PIN (4 REQ'D.)
	0017-00101-0141	#8 x 11/16 UNSLOT HEX HD. M.S. (6 REQ'D.)
10	A300-00021-0000	8-POSITION CONTROL ASSY.
	A300-00013-0000	CONTROL SHELF CABLE ASSY.
11	0017-00042-0304	RED — PUSH BUTTON ASSY. (2 REQ'D.)
12	0017-00042-0260	WHITE — PUSH BUTTON ASSY. (2 REQ'D.)
	0017-00032-0093	PUSH BUTTON SWITCH W/HOLDER (4 REQ'D.)
	0017-00103-0054	5/8-11 PAL NUT (4 REQ'D.)
13	0300-00904-0000	FRONT DECAL
14	0300-00903-0100	SIDE DECAL — LEFT
	0300-00903-0200	SIDE DECAL — RIGHT
15	A090-00300-11BK	U.S.A. 25¢ DOUBLE COIN DOOR ASSY.
	A982-00015-0000	COIN DOOR CABLE ASSY.
16	0090-00002-04BK	LARGE COIN DOOR FRAME
	0017-00101-0121	#6-32 x 5/16 PHIL. TRS. HD. SCR. (3 REQ'D.) (MOUNTS COIN DOOR TO FRAME)
17	0935-00906-0100	KICK PLATE — 23" LG.
18	0017-00102-0048	3/8-16 x 2" LEG LEVELERS (4 REQ'D.)
	0017-00103-0026	3/8-16 LEG LEVELER HEX NUTS (4 REQ'D.)

NO. 300 — BLUEPRINT — UPRIGHT — REAR ACCESS

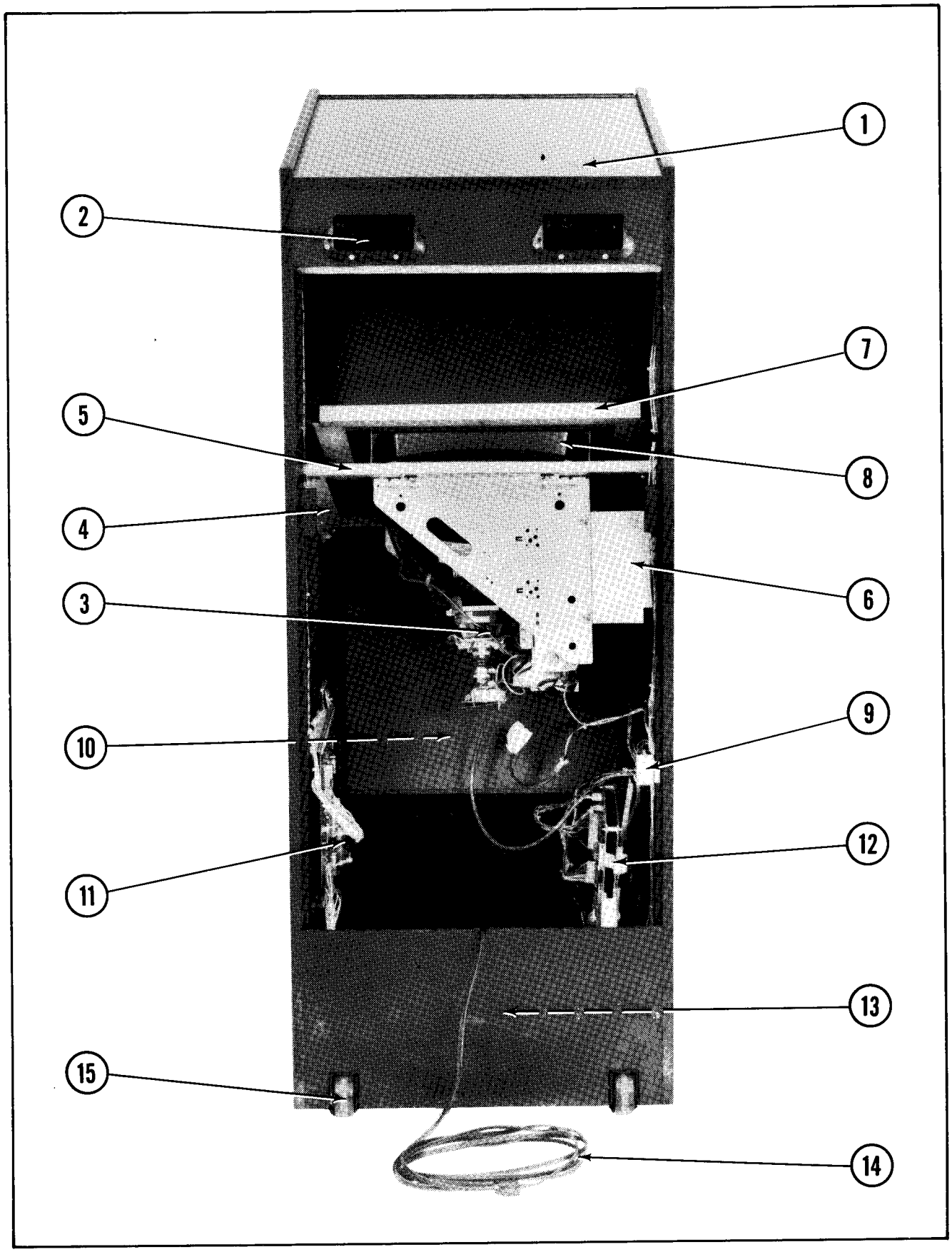

NO. 300 — BLUEPRINT — UPRIGHT — REAR ACCESS — PARTS LIST

*ORDER BY PART NUMBER **ONLY***

ITEM	PART NO.	DESCRIPTION
1	A088-00013-0000	ON-OFF SWITCH & BRKT. ASSY.
2	0894-00916-0000	RECESSED HAND PULL & VENT (2 REQ'D.)
	0017-00101-0141	#8 x 11/16 UNSLOT. HEX HD. M.S. (8 REQ'D.)
3	0017-00003-0339	ELECTROHOME — 19" COLOR DUAL SYNC HORIZ. MTG. MONITOR (OR)
3	0017-00003-0439	WELLS-GARDNER — 19" COLOR DUAL SYNC HORIZ. MTG. MONITOR
4	0508-00102-0000	MONITOR MTG. CHANNEL (2 REQ'D.)
5	0595-00104-0000	MONITOR RAIL (2 REQ'D.)
	0017-00102-0066	1/4-20 x 3/4 UNSLOT. HEX HD. BOLT (4 REQ'D.)
	0017-00104-0014	7/8" DISH WASHER (4 REQ'D.)
	0555-00901-0000	PLASTIC LOCATING PIN (4 REQ'D.)
6	0866-00120-0000	CHASSIS BRACE
	0017-00101-0141	#8 x 11/16 UNSLOT. HEX HD. M.S. (4 REQ'D.)
7	0508-00108-0000	GLASS STOP BRACKET
8	0508-00900-0000	19" T.V. BEZEL
9	A088-00015-0000	INTERLOCK SWITCH & BRKT. ASSY.
10	A950-00004-0000	COIN BOX ASSY.
	A950-00006-0000	COIN BOX CRADLE ASSY.
	0950-00105-0000	COIN BOX COVER
	0950-00104-0000	COIN BOX HANDLE
	0950-00101-0000	COIN DEFLECTOR (2 REQ'D.)
	0950-00900-0000	LARGE PLASTIC COIN BOX
	0950-00103-0000	COIN BOX DIVIDER — OPTIONAL
	0017-00101-0142	1/4-20 x 1-3/8 BLK. RND. HD. BOLT (4 REQ'D.)
	0017-00104-0014	7/8" DISH WASHER (4 REQ'D.)
	0017-00103-0018	1/4-20 HEX NUT (4 REQ'D.)
11	A082-90427-A000	POWER SUPPLY BOARD ASSY.
	0624-00902-0100	P.C. SUPPORT BRKT. — 12" LG. (2 REQ'D.)
	0624-00902-0500	P.C. SUPPORT BRKT. — 6-1/2" LG. (2 REQ'D.)
	0017-00101-0141	#8 x 11/16 UNSLOT. HEX HD. M.S. (10 REQ'D.)
	0017-00104-0037	#8 WASHER (10 REQ'D.)
12	A300-00004-0000	CARD RACK W/BOARDS ASSY.
13	A300-00006-0000	TRANSFORMER BOARD ASSY.
14	A089-00014-0000	LINE CORD CABLE ASSY.
15	A961-00007-0000	CASTER ASSY. (2 REQ'D.)
	0961-00109-0000	WHEEL BRKT. (2 REQ'D.)
	0017-00042-0255	PLASTIC WHEEL (2 REQ'D.)
	0894-00702-00XF	SHAFT (2 REQ'D.)
	0017-00100-0037	3/8" E-RING (2 REQ'D.)
		ADDITIONAL PARTS LIST
	A082-91109-A000	CREDIT MULT. BYPASS P.C.B.
	A151-00098-0000	BACK DOOR LOCK ASSY.
	0017-00009-0490	5-5/8" SQR. VENT GRILL — BACK DOOR (4 REQ'D.)
	A300-00018-0000	MASTER CABLE W/BRKT. ASSY.
	A300-00007-0000	HIGH VOLTAGE CABLE ASSY.
	A300-00008-0000	LOW VOLTAGE CABLE ASSY.
	A300-00010-0000	VIDEO SIGNAL CABLE ASSY.
	A515-00020-0000	TEST SWITCH & BRKT. ASSY.
	3000-17246-0700	20" GROUND STRAP — CONTROL SHELF
	3000-17246-0800	23" GROUND STRAP — CONTROL SHELF

NO. 300 — BLUEPRINT — UPRIGHT — HEADER FLUORESCENT LIGHT ASSY.

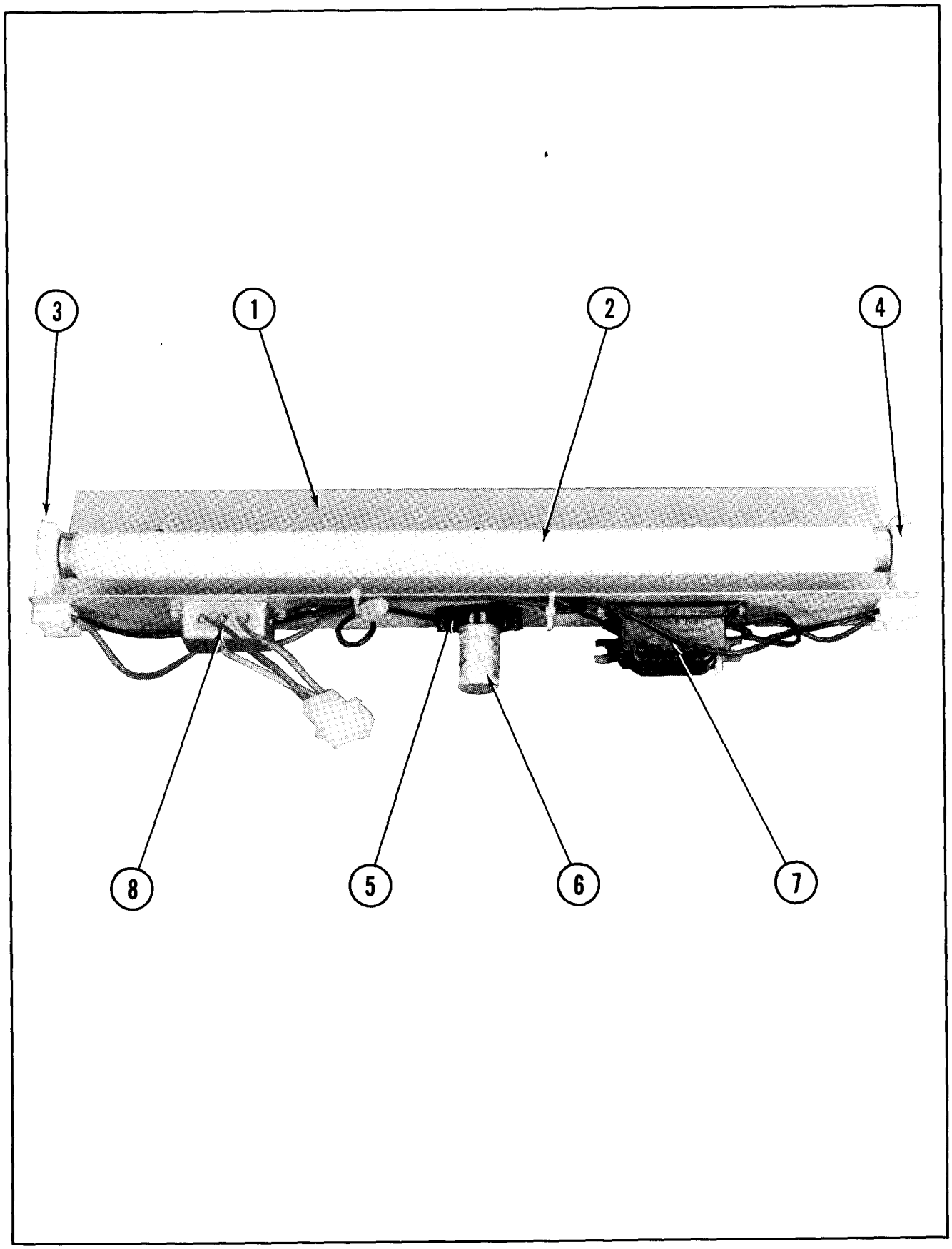

NO. 300 — BLUEPRINT — UPRIGHT — HEADER FLUORESCENT LIGHT ASSY. — PARTS LIST

*ORDER BY PART NUMBER **ONLY***

ITEM	PART NO.	DESCRIPTION
1	0595-00105-0000	FLUORESCENT BRKT.
2	0017-00003-0043	18" COOL WHITE FLUORESCENT LAMP
3	0017-00003-0445	LAMP LOCKS (2 REQ'D.)
4	0017-00031-0036	FLUORESCENT SOCKET (2 REQ'D.)
5	0017-00003-0412	FLUORESCENT STARTER HOLDER W/LEADS
	0017-00101-0573	#6-32 x 1/2 PHIL. RND. HD. M.S. (4 REQ'D.)
	0017-00104-0009	#6 EXT. WASHER (4 REQ'D.)
6	0017-00003-0019	FLUORESCENT STARTER
7	0017-00003-0026	BALLAST
	0017-00101-0598	#8-32 x 5/16 SLT. HEX HD. SCR. (4 REQ'D.)
8	A961-00042-0000	LINE FILTER ASSY.

NO. 301 — BLUEPRINT — MINI — FRONT

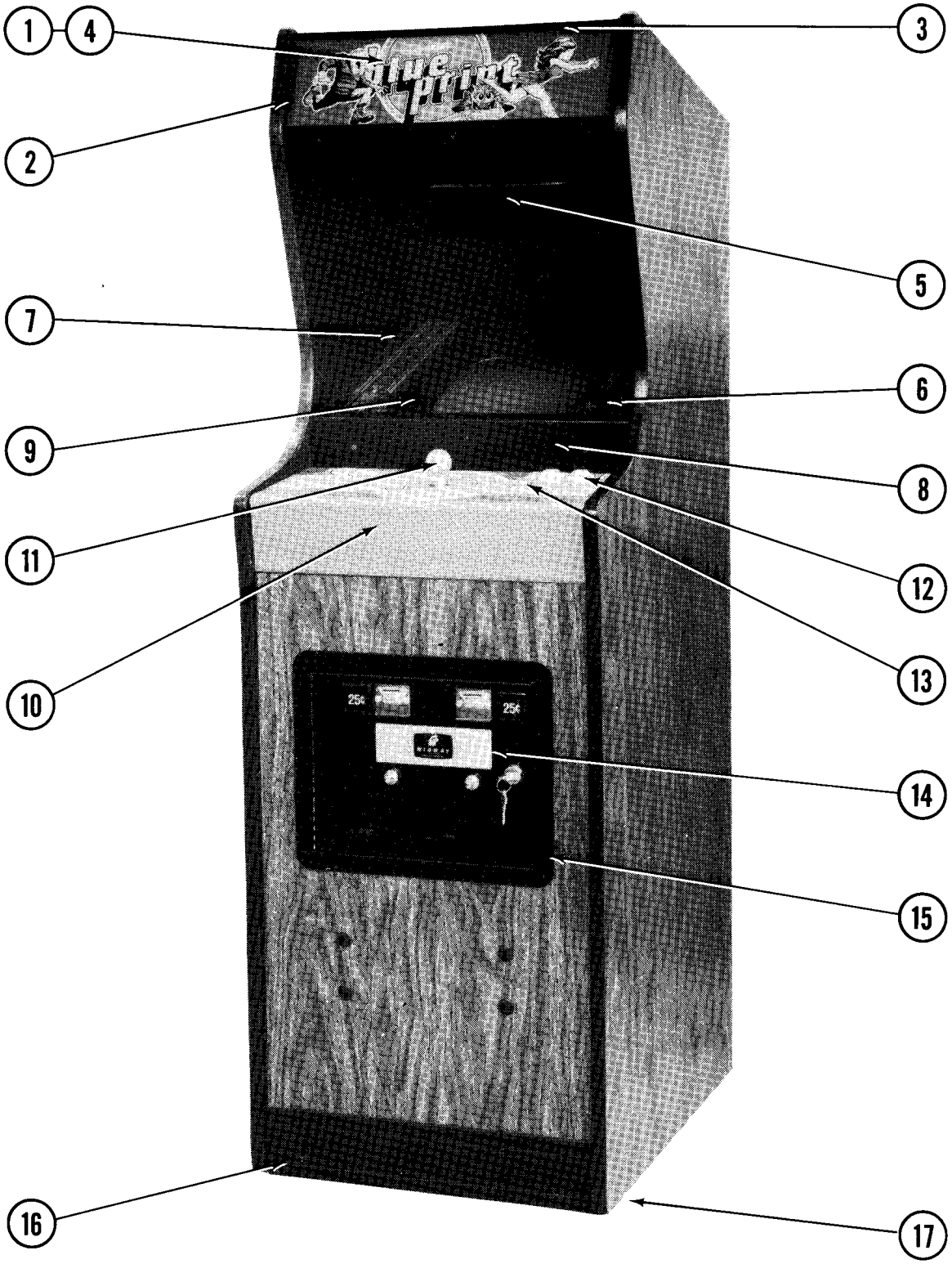

NO. 301 — BLUEPRINT — MINI — FRONT — PARTS LIST

*ORDER BY PART NUMBER **ONLY***

ITEM	PART NO.	DESCRIPTION
1	0301-00901-00XF	DISPLAY HEADER
2	0537-00903-0062	GLASS CHANNEL — 3-7/8" LG. (2 REQ'D.)
3	0574-00903-0200	HEADER RETAINER BRKT. (2 REQ'D.)
	0017-00101-0138	#8 x 5/8 TORX TAMPER RESISTANT SCR. (8 REQ'D.)
	0017-00009-0522	LONG ARM KEY T-20 (FOR ABOVE SCREW)
4	A574-00007-0000	INSERT DISPLAY ASSY.
	0017-00031-0030	WEDGE BASE LAMP SOCKET (5 REQ'D.)
	0017-00003-0219	#194 LAMP — 14V., .27A. (5 REQ'D.)
	A574-00015-0000	INSERT DISPLAY CABLE ASSY.
5	0017-00009-0393	BLACK SPEAKER GRILL W/SLOTS
	0017-00003-0259	6" x 9" SPEAKER — 8 OHM, 7W.
	0017-00101-0127	#8-32 x 1-1/2 CARRIAGE BOLT (4 REQ'D.)
	0017-00103-0061	#8-32 HEX NUT W/SEMS (4 REQ'D.)
6	0301-00900-00XF	MAIN VIEWING GLASS
7	0537-00903-0056	GLASS CHANNEL — 14-1/2" LG. (2 REQ'D.)
8	A555-00016-0000	GLASS CLAMPING PLATE ASSY.
	0017-00101-0138	#8 x 5/8 TORX TAMPER RESISTANT SCREW (2 REQ'D.)
9	0513-00900-0000	T.V. BEZEL
	A961-00026-0000	BEZEL MTG. BRKT. ASSY. (2 REQ'D.)
10	0301-00902-0000	CONTROL SHELF OVERLAY — DECORATIVE
	A301-00015-0000	CONTROL SHELF PLATE WELD ASSY.
	0555-00101-0100	CONTROL SHELF MTG. BRKT. — RIGHT
	0550-00101-0200	CONTROL SHELF MTG. BRKT. — LEFT
	0550-00901-0000	PLASTIC LOCATING PINS (4 REQ'D.)
	0017-00009-0033	LATCH CLAMP (2 REQ'D.)
	0017-00101-0141	#8 x 11/16 UNSLOT. HEX HD. M.S. (8 REQ'D.)
11	A300-00021-0000	8-POSITION CONTROL ASSY.
	A301-00009-0000	CONTROL SHELF CABLE ASSY.
12	0017-00042-0260	PUSH BUTTON ASSY. — WHITE (2 REQ'D.)
13	0017-00042-0304	PUSH BUTTON ASSY. — RED (2 REQ'D.)
	0017-00032-0093	PUSH BUTTON SWITCH W/HOLDER (4 REQ'D.)
	0017-00103-0054	5/8-11 PAL NUT (4 REQ'D.)
14	A090-00300-11BK	25¢ U.S.A. DOUBLE COIN DOOR ASSY.
	A982-00015-0000	COIN DOOR CABLE ASSY.
15	0090-00002-04BK	LARGE COIN DOOR FRAME
	0017-00101-0121	#6-32 x 5/16 PHIL. TRS. HD. SCR. (3 REQ'D.) (MOUNTS COIN DOOR TO FRAME)
16	0935-00906-0400	KICK PLATE — 17-15/16" LG.
17	0017-00102-0048	3/8-16 x 2" LEG LEVELERS (4 REQ'D.)
	0017-00103-0026	3/8-16 LEG LEVELER HEX NUTS (4 REQ'D.)

NO. 301 — BLUEPRINT — MINI — REAR ACCESS

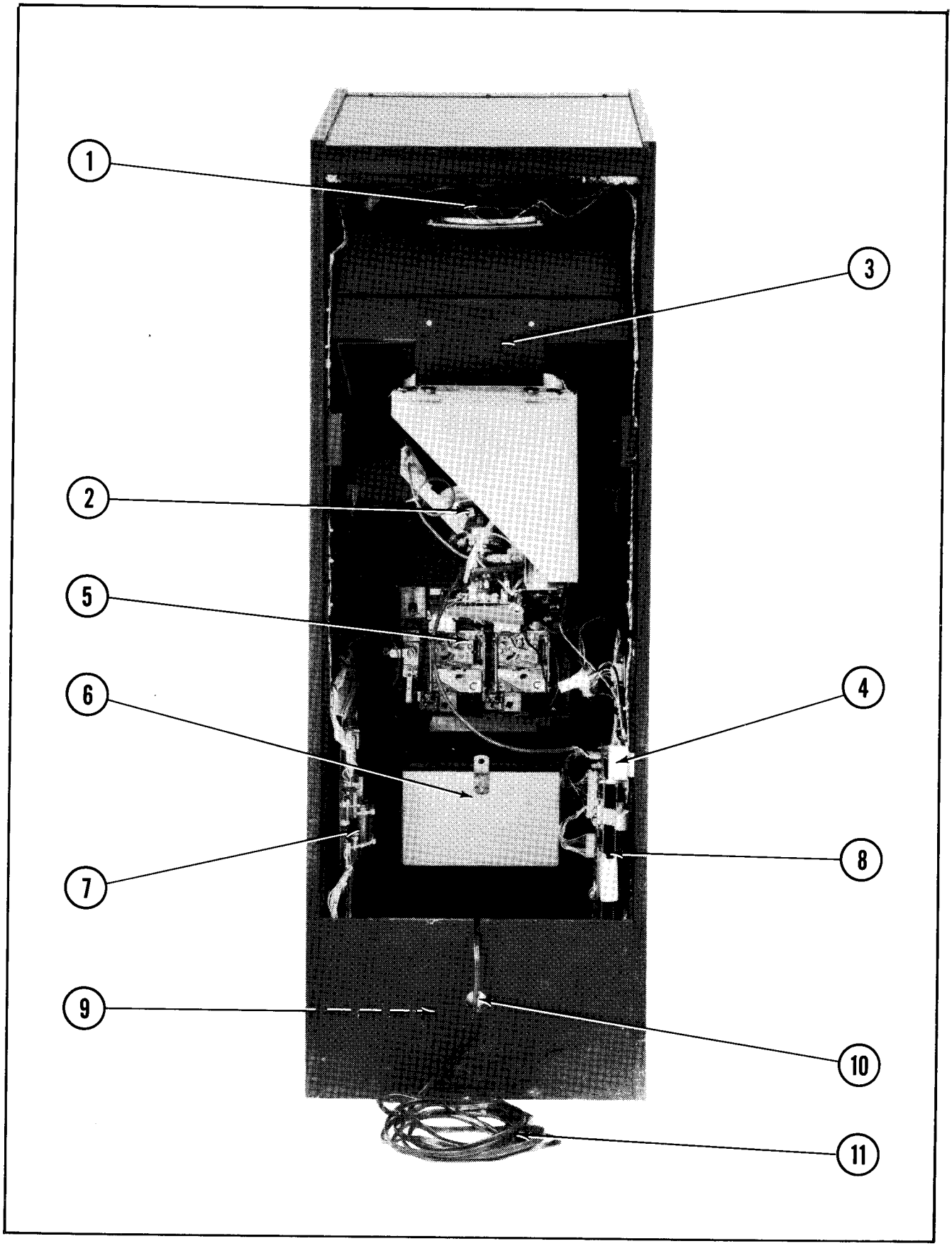

NO. 301 — BLUEPRINT — MINI — REAR ACCESS — PARTS LIST

*ORDER BY PART NUMBER **ONLY***

ITEM	PART NO.	DESCRIPTION
1	0017-00003-0259	6" x 9" SPEAKER — 8 OHM, 7W.
2	0017-00003-0340	ELECTROHOME — 13" COLOR DUAL SYNC HORIZ. MTG. MONITOR (OR)
2	0017-00003-0435	WELLS-GARDNER — 13" COLOR DUAL SYNC HORIZ. MTG. MONITOR
3	A926-00012-00XF	T.V. MTG. BRKT. ASSY.
	0017-00102-0066	1/4-20 x 3/4 UNSLOT. HEX HD. BOLT (2 REQ'D.)
	0017-00104-0014	7/8" DISH WASHER (2 REQ'D.)
	0017-00103-0018	1/4-20 HEX NUT (2 REQ'D.)
	0513-00101-0000	MONITOR MTG. BRKT.
4	A088-00015-0000	INTERLOCK SWITCH & BRKT. ASSY.
5	A090-00300-11BK	25¢ U.S.A. DOUBLE COIN DOOR ASSY.
6	A950-00004-0000	COIN BOX ASSY.
	A950-00006-0000	COIN BOX CRADLE ASSY.
	0950-00105-0000	COIN BOX COVER
	0950-00104-0000	COIN BOX HANDLE
	0950-00900-0000	LARGE PLASTIC CASH BOX
	0950-00101-00XF	COIN DEFLECTOR (2 REQ'D.)
	0950-00103-0000	COIN BOX DIVIDER — OPTIONAL
	0017-00101-0142	1/4-20 1-3/8 BLK. RND. HD. BOLT (4 REQ'D.)
	0017-00104-0014	7/8" DISH WASHER (4 REQ'D.)
	0017-00103-0018	1/4-20 HEX NUT (4 REQ'D.)
7	A082-90427-A000	POWER SUPPLY BOARD ASSY.
	0624-00902-0100	P.C. SUPPORT BRKT. — 12" LG. (2 REQ'D.)
	0624-00902-0500	P.C. SUPPORT BRKT. — 6-1/2" LG. (2 REQ'D.)
	0017-00101-0141	#8 x 11/16 UNSLOT. HEX HD. M.S. (10 REQ'D.)
	0017-00104-0037	#8 FLAT WASHER (10 REQ'D.)
8	A300-00004-0000	CARD RACK W/BOARDS ASSY.
9	A301-00005-0000	TRANSFORMER BOARD ASSY.
10	A088-00013-0000	ON-OFF SWITCH & BRKT. ASSY.
11	A089-00014-0000	LINE CORD CABLE ASSY.
		ADDITIONAL PARTS LIST
	A082-91109-A000	CREDIT MULT. BYPASS P.C.B.
	A151-00098-0000	BACK DOOR LOCK ASSY.
	0017-00009-0490	5-5/8" SQR. VENT GRILL (4 REQ'D.)
	0926-00904-0000	PROTECTIVE BUBBLE — BACK DOOR
	0017-00101-0628	#8-32 x 3/4 CARRIAGE BOLT (10 REQ'D.)
	0017-00103-0061	#8-32 HEX NUT W/SEMS (10 REQ'D.)
	A515-00020-0000	TEST SWITCH & BRKT. ASSY.
	A301-00014-0000	MASTER CABLE W/BRKT. ASSY.
	A301-00006-0000	HIGH VOLTAGE CABLE ASSY.
	A301-00007-0000	LOW VOLTAGE CABLE ASSY.
	A300-00010-0000	VIDEO SIGNAL CABLE ASSY.

NO. 302 — BLUEPRINT — COCKTAIL — FRONT

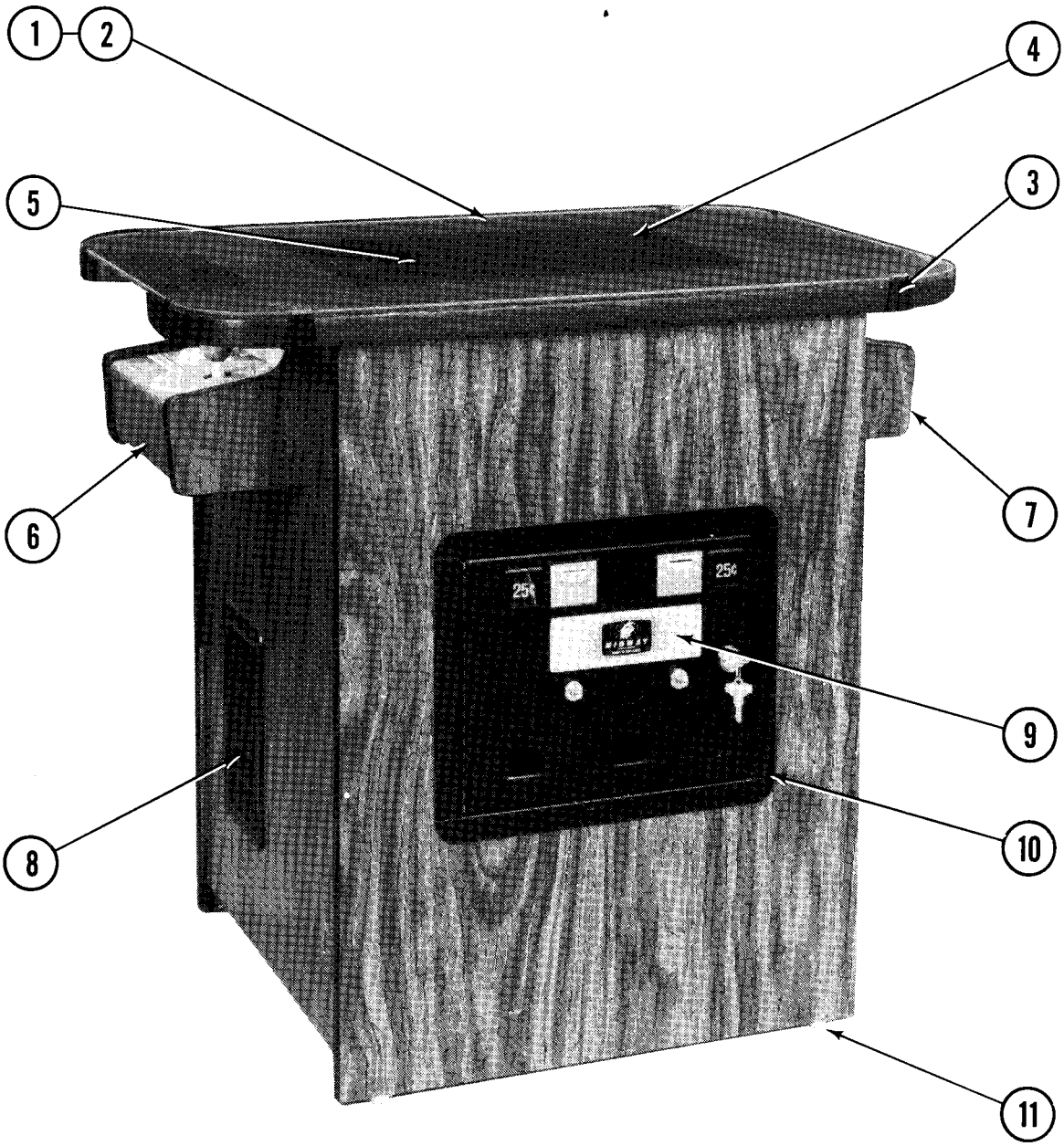

NO. 302 — BLUEPRINT — COCKTAIL — FRONT — PARTS LIST

ORDER BY PART NUMBER ***ONLY***

ITEM	PART NO.	DESCRIPTION
1	0017-00009-0499	COVER GLASS — 32" x 22" x 1/4"
2	0302-00900-0000	ARTWORK UNDERLAY
3	0775-00104-00XF	GLASS CLIPS (8 REQ'D.)
	0017-00101-0117	#8 x 5/8 BLK. PHIL. TRS. HD. SCR. (16 REQ'D.)
4	0557-00900-0000	T.V. BEZEL
	0508-00106-0000	BEZEL MTG. BRKT. (2 REQ'D.)
5	0530-00903-0000	ACRYLIC DIFFUSER
6	A302-00009-0100	CONTROL SHELF ASSY. — PLAYER #1
	A302-00010-0100	CONTROL SHELF CABLE ASSY. — PLAYER #1
7	A302-00009-0200	CONTROL SHELF ASSY. — PLAYER #2
	A302-00010-0200	CONTROL SHELF CABLE ASSY. — PLAYER #2
8	0017-00009-0393	BLACK SPEAKER GRILL W/SLOTS (3 REQ'D.)
	0017-00003-0187	6" x 9" SPEAKER — 8 OHM, 9W.
	0017-00101-0136	#8-32 x 1-1/4 CARRIAGE BOLT (12 REQ'D.)
	0017-00103-0061	#8-32 HEX NUT W/SEMS (12 REQ'D.)
9	A090-00300-11BK	25¢ U.S.A. DOUBLE COIN DOOR ASSY.
	A982-00015-0000	COIN DOOR CABLE ASSY.
10	0090-00002-02BK	LARGE COIN DOOR FRAME
	0017-00101-0121	#6-32 x 5/16 PHIL. TRS. HD. SCREW (3 REQ'D.) (MOUNTS COIN DOOR TO FRAME)
11	0017-00102-0048	3/8-16 x 2" LEG LEVELERS (4 REQ'D.)
	0017-00103-0026	3/8-16 LEG LEVELER HEX NUTS (4 REQ'D.)

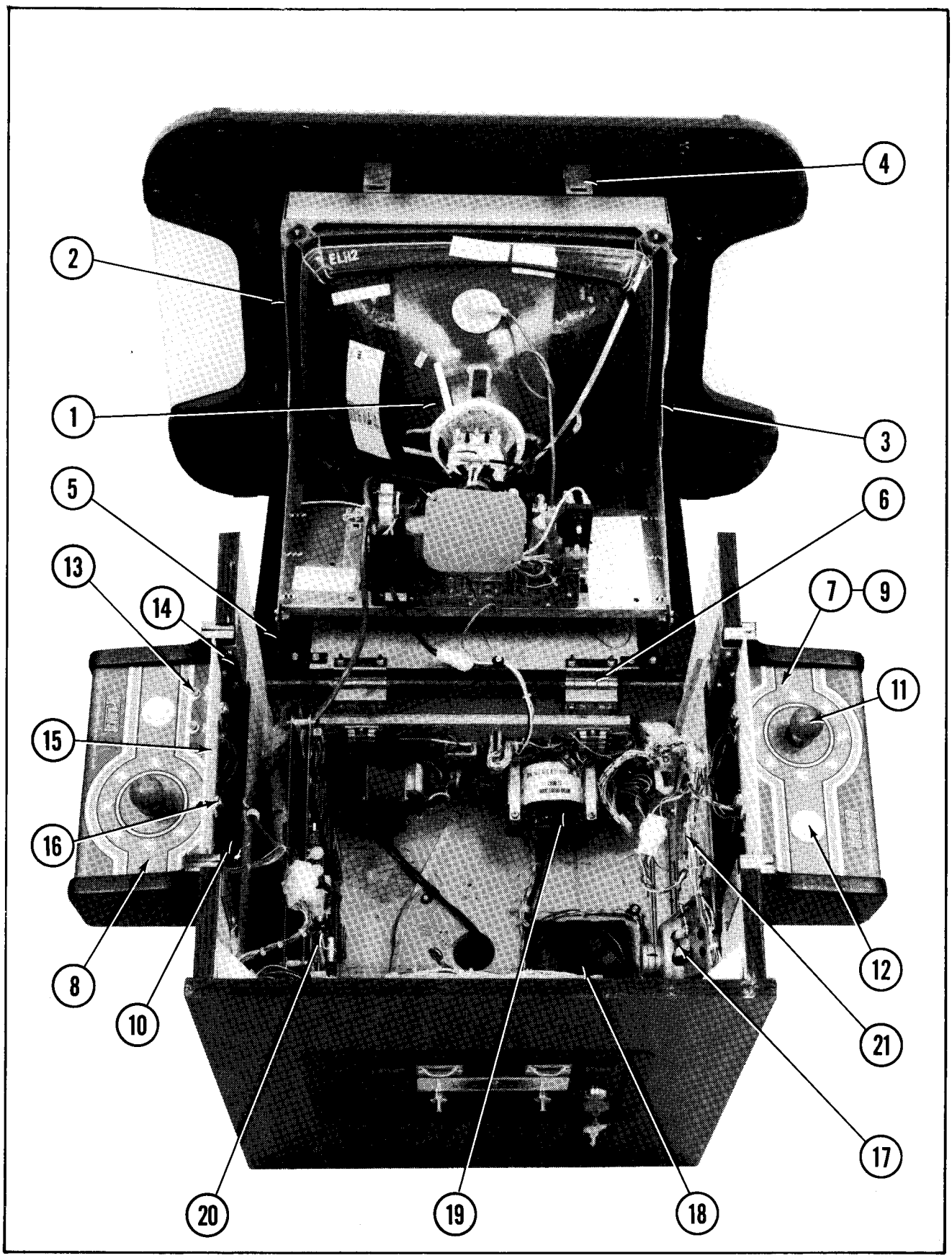
1
2
3
4
5
6
7
8
9
10
11
12
13
14
15
16
17
18
19
20
21

NO. 302 — BLUEPRINT — COCKTAIL — INTERIOR ACCESS — PARTS LIST

*ORDER BY PART NUMBER **ONLY***

ITEM	PART NO.	DESCRIPTION
1	0017-00003-0339	ELECTROHOME — 19" COLOR DUAL SYNC. HORIZ. MTG. MONITOR (OR)
1	0017-00003-0439	WELLS-GARDNER — 19" COLOR DUAL SYNC. HORIZ. MTG. MONITOR
2	A515-00019-0000	MONITOR SUPPORT ASSY. — LEFT
3	A515-00019-0100	MONITOR SUPPORT ASSY. — RIGHT
	0017-00101-0109	#8 x 5/16 UNSLOT. HEX HD. BOLT (6 REQ'D.)
4	0610-00132-00ZN	STRIKE (2 REQ'D.)
	0017-00101-0769	#10 x 3/4 SLT. HEX HD. M.S. (4 REQ'D.)
	0017-00009-0033	LATCH CLAMP (2 REQ'D.)
	0017-00101-0141	#8 x 11/16 UNSLOT. HEX HD. SCREW (4 REQ'D.)
5	0927-00101-00XF	SUPPORT ANGLE (2 REQ'D.)
	0017-00101-0598	#8-32 x 5/16 SLT. HEX HD. M.S. (8 REQ'D.)
6	0017-00009-0514	2-1/2" HINGE (2 REQ'D.)
	0017-00101-0136	#8-32 x 1-1/4 CARRIAGE BOLT (8 REQ'D.)
	0017-00103-0061	#8-32 HEX NUT W/SEMS (8 REQ'D.)
7	A302-00015-0000	CONTROL PANEL ASSY. — WELDMENT (2 REQ'D.)
8	0302-00901-0100	DECORATIVE OVERLAY PLAYER #1
9	0302-00901-0200	DECORATIVE OVERLAY PLAYER #2
	0017-00101-0341	#6 x 1/4 PHIL. TRS. HD. SCR. (6 REQ'D.)
10	0510-00101-00XF	BOTTOM PAN (2 REQ'D.)
11	A300-00021-0000	8-POSITION CONTROL ASSY. (2 REQ'D.)
	A302-00010-0100	CONTROL SHELF CABLE ASSY. — PLAYER #1
	A302-00010-0200	CONTROL SHELF CABLE ASSY. — PLAYER #2
12	0017-00042-0304	RED — PUSH BUTTON ASSY. (2 REQ'D.)
	0017-00032-0093	PUSH BUTTON SWITCH W/HOLDER (2 REQ'D.)
	0017-00103-0054	5/8-11 PAL NUT (2 REQ'D.)
13	0017-00032-0051	SMALL RED BUTTON SWITCH (2 REQ'D.)
14	0930-00104-0000	PANEL LOCATING BRKT. (4 REQ'D.)
	0017-00101-0025	#8 x 1/2 SLT. HD. SCREW (12 REQ'D.)
15	0930-00904-0000	LIGHT SHIELD (2 REQ'D.)
16	0017-00031-0044	WEDGE BASE LAMP SOCKET (4 REQ'D.)
	0017-00003-0219	#194 LAMP — 14V., .27A. (4 REQ'D.)
	0017-00101-0555	#6-32 x 5/16 SLT. HEX HD. SCR. (4 REQ'D.)
17	0017-00003-0187	6" x 9" SPEAKER — 8 OHM, 9W.
18	A775-00013-0000	FAN ASSY.
	0151-00081-0000	4" FAN
	0775-00110-00XF	FAN PLATE
	0749-00106-00XF	FAN SCREEN
	A775-00018-0000	FAN CABLE ASSY.
	0017-00101-0347	#6-32 x 1/2 RND. HD. M.S. (4 REQ'D.)
	0017-00104-0009	#6 EXT. WASHER (4 REQ'D.)
	0017-00103-0005	#6-32 HEX NUT (4 REQ'D.)
	0017-00101-0026	#8 x 5/8 SLT. HEX HD. SCREW (4 REQ'D.)
19	A302-00006-0000	TRANSFORMER BOARD ASSY.
20	A300-00004-0000	CARD RACK ASSY. W/BOARDS
21	A082-90427-A000	POWER SUPPLY BOARD ASSY. — NOT SHOWN
	0624-00902-0100	P.C. SUPPORT BRKT. — 12" LG.
	0624-00902-0300	P.C. SUPPORT BRKT. — 2-1/2" LG. (2 REQ'D.)
	0624-00902-0500	P.C. SUPPORT BRKT. — 6-1/2" LG.
	0017-00101-0141	#8 x 11/16 UNSLOT. HEX HD. M.S. (10 REQ'D.)
	0017-00104-0037	#8 FLAT WASHER (10 REQ'D.)

NO. 302 — BLUEPRINT — COCKTAIL — INTERIOR ACCESS — PARTS LIST (Continued)

*ORDER BY PART NUMBER **ONLY***

ITEM	PART NO.	DESCRIPTION
		ADDITIONAL PARTS LIST
	A082-91109-A000	CREDIT MULT. BYPASS P.C.B.
	A088-00013-0000	ON-OFF SWITCH & BRKT. ASSY.
	A088-00014-0000	INTERLOCK SWITCH & BRKT. ASSY.
	A515-00020-0000	TEST SWITCH & BRKT. ASSY.
	A927-00019-0000	COIN BOX ASSY.
	A962-00004-0000	COIN BOX COVER ASSY.
	A962-00005-0000	COIN BOX SIDE CHANNEL ASSY. — SHORT
	0962-00101-0000	COIN BOX SIDE CHANNEL — SHORT
	0017-00101-0628	#8-32 x 3/4 CARRIAGE BOLT (4 REQ'D.)
	0017-00104-0022	#8 WASHER (4 REQ'D.)
	0017-00103-0061	#8-32 HEX NUT W/SEMS (4 REQ'D.)
	A302-00012-0000	MASTER CABLE W/BRKT. ASSY.
	A302-00007-0000	HIGH VOLTAGE CABLE ASSY.
	A302-00008-0000	LOW VOLTAGE CABLE ASSY.
	A300-00010-0000	VIDEO SIGNAL CABLE ASSY.
	0927-00907-0000	FORMED HIGH VOLTAGE SHIELD
	A927-00005-0000	HIGH BASE LEG KIT ASSY. — OPTIONAL

BLUEPRINT — ALL VERSIONS — CARD RACK ASSY. — PARTS LIST

*ORDER BY PART NUMBER **ONLY***

ITEM	PART NO.	DESCRIPTION
1	A084-91430-C300	MPU/SOUND BOARD ASSY.
2	A084-91431-A300	VIDEO BOARD ASSY.
3	A935-00015-0000	HOLDER PLATE & STOP ASSY. (2 REQ'D.)
4	0017-00009-0478	NYLON GUIDE (4 REQ'D.)
5	0935-00105-0000	RETAINER (2 REQ'D.)
6	0935-00103-0000	SIDE SUPPORT (2 REQ'D.)
7	0935-00102-0000	MOUNTING BRACKET (2 REQ'D.)
8	0017-00101-0096	#6 x 3/8 SLT. HEX HD. SCR. (14 REQ'D.)

BLUEPRINT — ALL VERSIONS — CARD RACK ASSY.

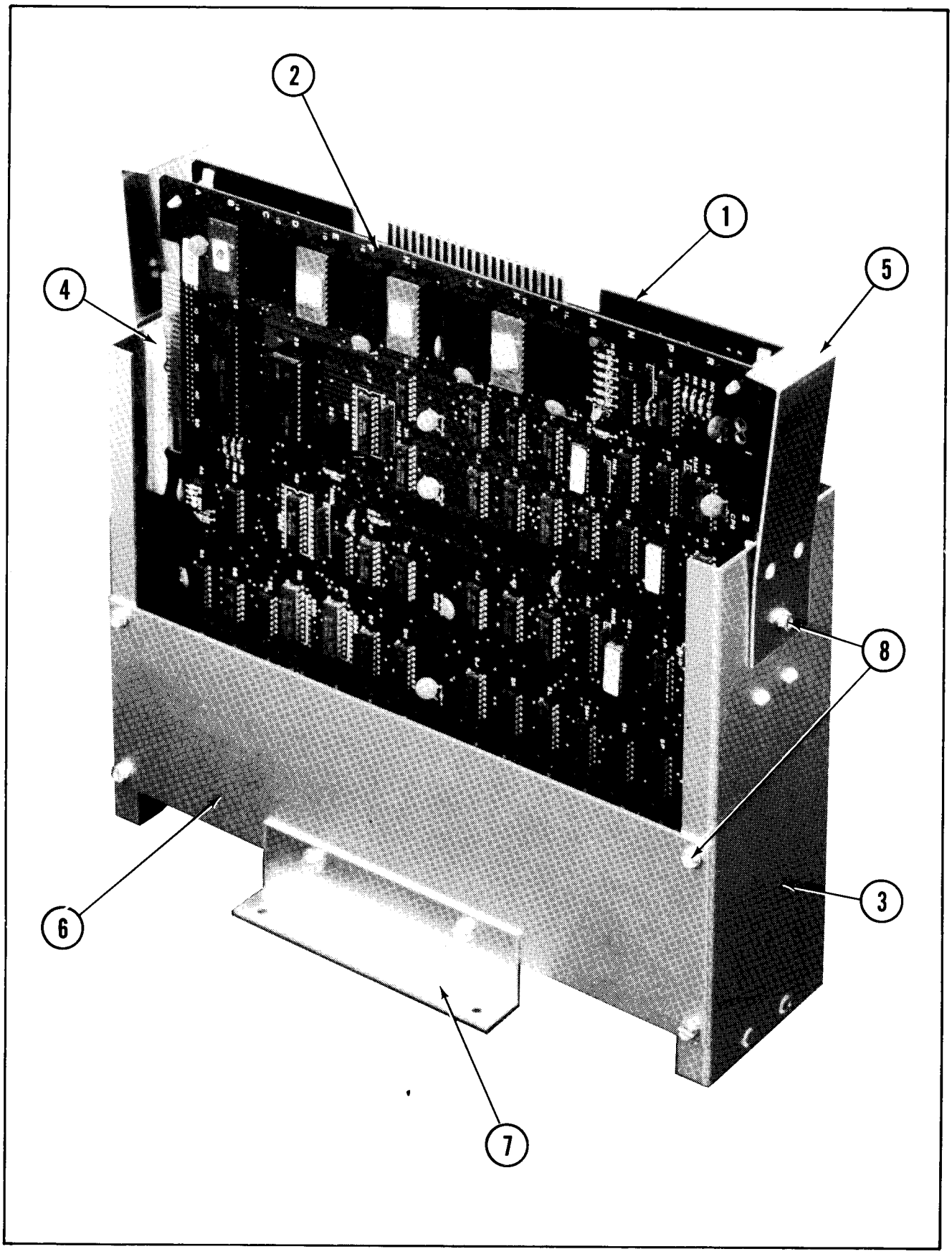

BLUEPRINT — CONTROL ASSY.

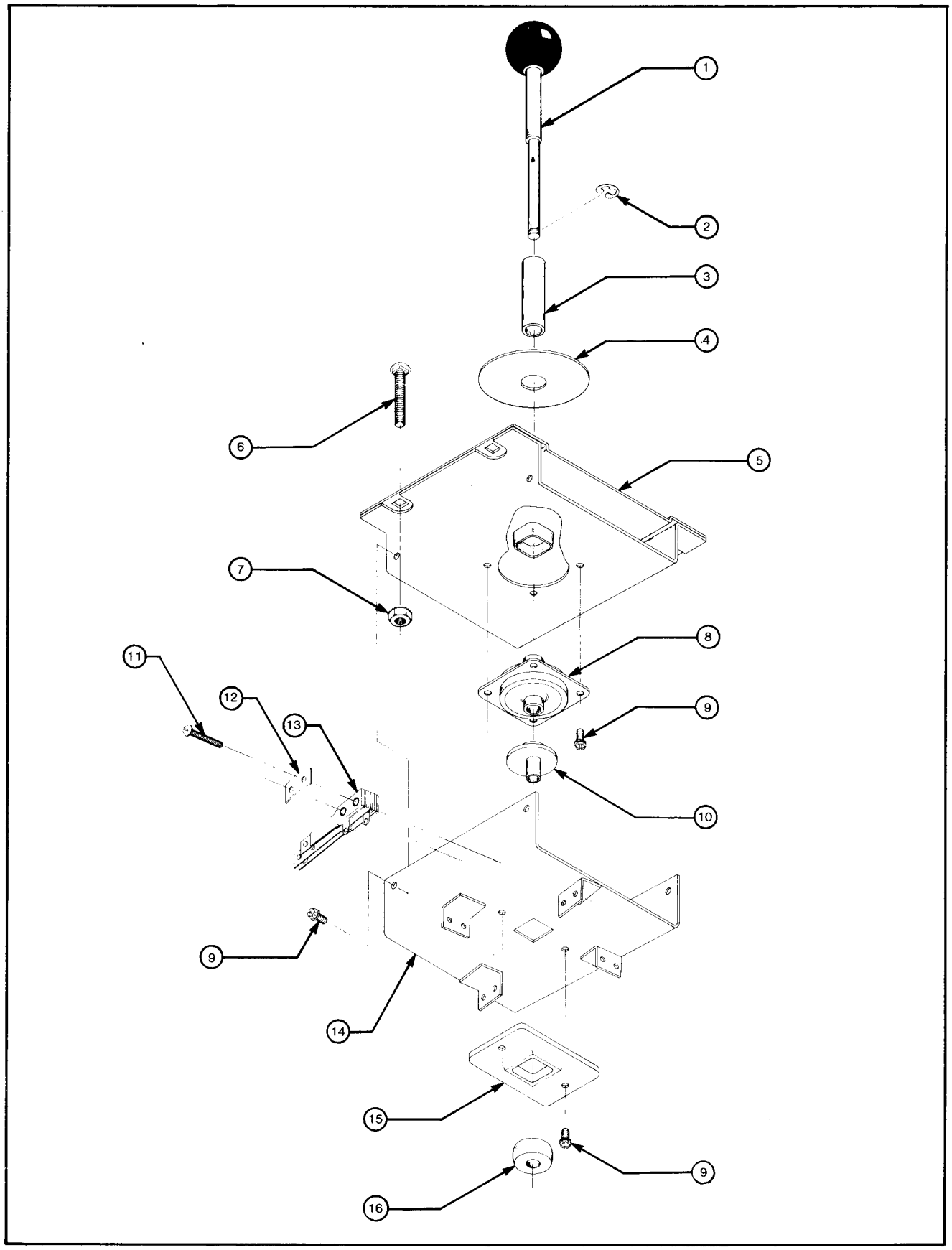

BLUEPRINT — CONTROL ASSY. — PARTS LIST

ORDER BY PART NUMBER ***ONLY***

ITEM	PART NO.	DESCRIPTION
1	A932-00022-0000	BALL & SHAFT ASSEMBLY
2	0017-00100-0025	1/4" E-RING
3	0921-00702-0000	STOP SPACER
4	0530-00907-0000	SLIDE PLATE
5	A982-00019-0000	PIVOT PLATE WELD ASSY.
6	0017-00101-0637	#8-32 x 1" CARRIAGE BOLT (4 REQ'D.)
7	0017-00103-0061	#8-32 HEX NUT W/SEMS (4 REQ'D.)
8	0932-00902-0000	GROMMET
9	0017-00101-0598	#8-32 x 5/16 SLT. HEX HD. M.S. (10 REQ'D.)
10	0962-00904-0000	SLEEVE
11	0017-00101-0527	#5-40 x 5/8 SLT. RND. HD. SCR. (8 REQ'D.)
12	0020-00202-0000	SWITCH PLATE (4 REQ'D.)
13	A932-00009-0000	SWITCH ASSEMBLY (4 REQ'D.)
14	A921-00009-0000	STOP PLATE & SWITCH BRKT. ASSY.
15	0927-00908-0000	WEAR PLATE
16	0921-00700-0000	ACTUATOR

FILTER ASSY.

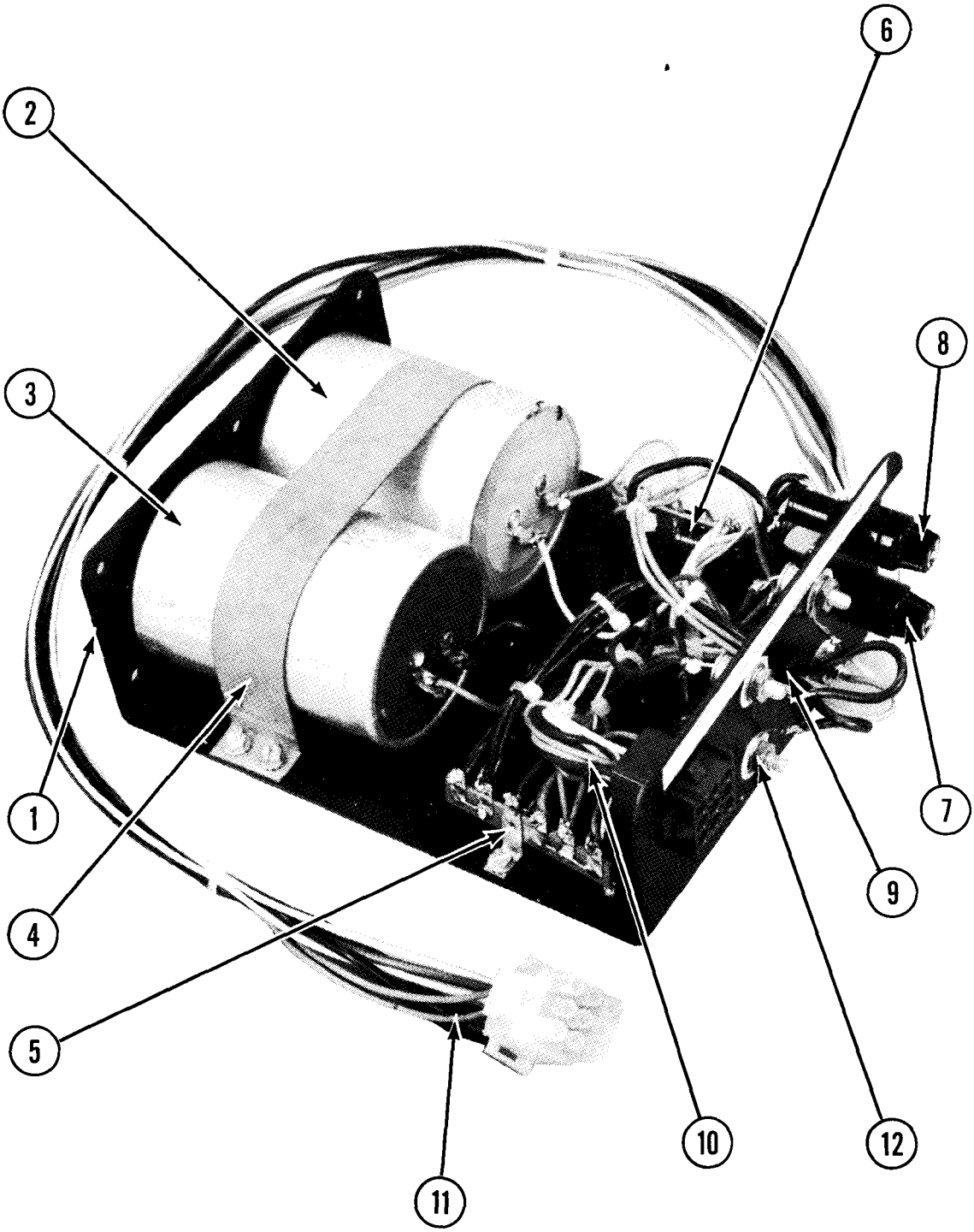

FILTER ASSY. — PARTS LIST

*ORDER BY PART NUMBER **ONLY***

ITEM	PART NO.	DESCRIPTION
1	0945-00101-00XF	CHASSIS
2	0945-00803-0100	CAPACITOR — 55000MF — 25V.
3	0945-00803-0200	CAPACITOR — 100000MF — 15V.
4	0945-00100-0000	CAPACITOR STRAP
	0017-00101-0555	#6-32 x 5/16 SLT. HEX HD. SCR. (4 REQ'D.)
5	0017-00021-0539	5 POSITION TERMINAL STRIP (2 REQ'D.)
	0017-00101-0510	#4-40 x 1/2 SLT. PAN HD. SCR. (4 REQ'D.)
	0017-00104-0087	#4 FLAT WASHER (4 REQ'D.)
	0017-00104-0071	#4 EXT. TOOTH WASHER (4 REQ'D.)
	0017-00103-0002	#4-40 HEX NUT (4 REQ'D.)
6	0062-122H7-1XXX	RESISTOR — 150 OHM, 2W.
	0062-086H7-1XXX	RESISTOR — 47 OHM, 2W. — LOCATED ON OPPOSITE TERMINAL STRIP
7	0017-00003-0008	FUSE — 6 AMP — 120V.
8	0017-00003-0174	FUSE — 10 AMP — 32V.
	0017-00003-0433	FUSE HOLDER (2 REQ'D.)
9	0017-00041-0008	RUBBER GROMMET
10	A089-00007-0000	FILTER CABLE ASSY. #2
11	A089-00006-0000	FILTER CABLE ASSY. #1
12	0945-00804-0100	DIODE — 12A. — 50V. (4 REQ'D.)
	0017-00103-0086	#10-32 HEX NUT (4 REQ'D.)
	0017-00021-0484	SOLDER LUG (4 REQ'D.)
	0017-00104-0107	#10 FLAT WASHER (4 REQ'D.)
	0017-00009-0510	INSULATOR (8 REQ'D.)
	0017-00042-0283	BUSHING (4 REQ'D.)
	0945-00900-0000	DIODE FORMED FISHPAPER COVER — NOT SHOWN

FRONT DOOR ASSEMBLY

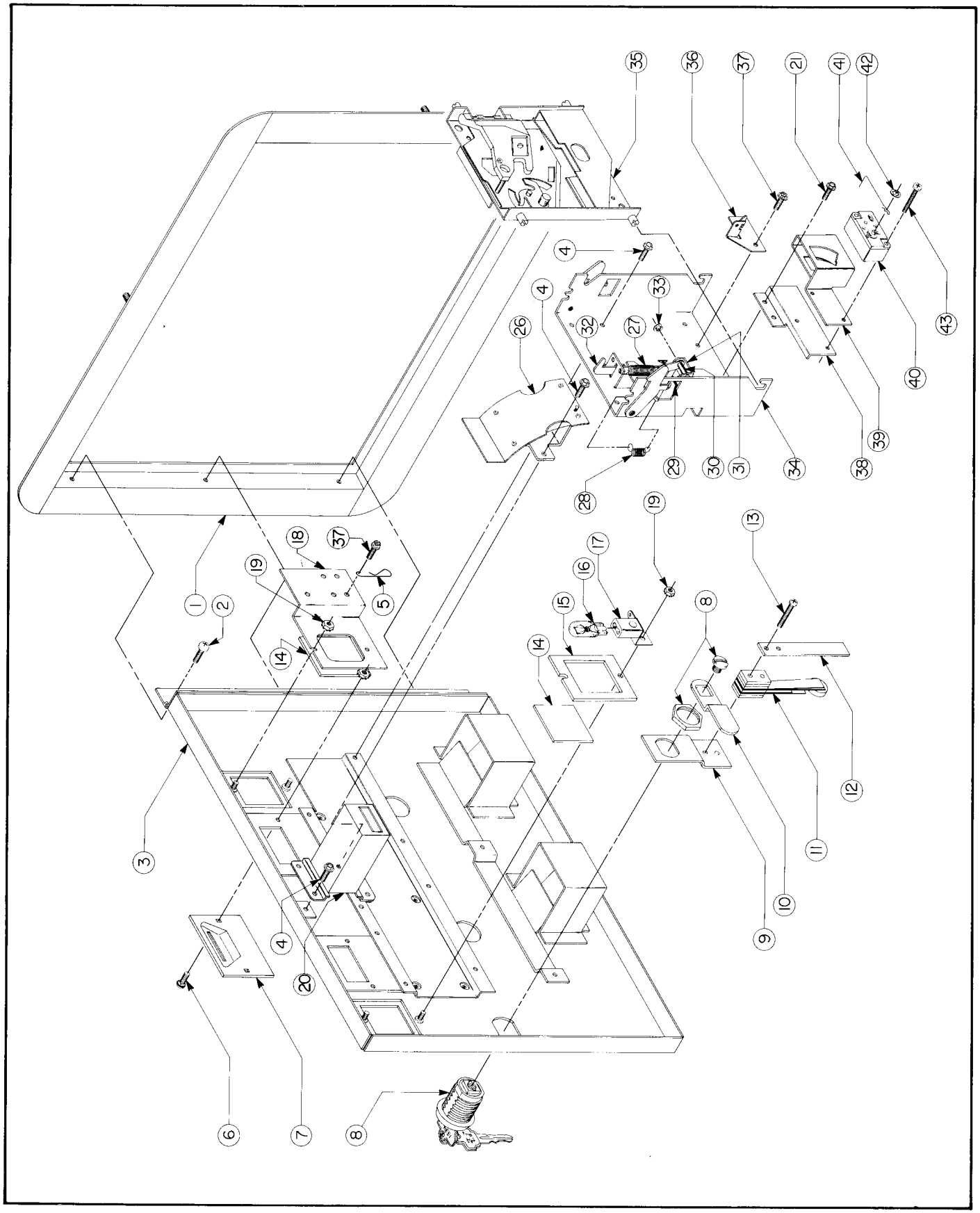

FRONT DOOR ASSEMBLY — U.S.A. 25¢

*ORDER BY PART NUMBER **ONLY***

ITEM	PART NO.	DESCRIPTION
1	0090-00002-02BK	DOUBLE ENTRY COIN DOOR FRAME
2	0017-00101-0121	#6-32 x 5/16 PHIL. TRS. HD. SCR. (3 REQ'D.)
3	A090-00073-02BK	DOUBLE ENTRY COIN DOOR W/DRESS PLATE
4	0017-00101-0123	#8 x 1/4 UNSLOT. HEX HD. SCREW (12 REQ'D.)
5	0017-00007-0019	KEY HOOK
6	0017-00101-0552	#6-32 x 1/4 CARRIAGE BOLT (4 REQ'D.)
7	0090-00117-03XF	COIN ENTRY PLATE — 25¢ (2 REQ'D.)
8	A097-00005-0000	DOOR LOCK & KEY W/SCREW & NUT (OR)
8	A097-00006-0000	DOOR LOCK & KEY W/SCREW & NUT
9	0090-00128-00XF	DOOR TILT SWITCH BRKT.
10	0017-00005-0041	DOOR CAM
11	A090-00095-0000	DOOR TILT SWITCH
12	0090-00126-01XF	SWITCH BACK-UP PLATE
13	0017-00101-0525	#5-40 x 9/16" PHIL. HD. M.S. (2 REQ'D.)
	A090-00096-0000	DOOR TILT SWITCH & BRKT. ASSY. (ITEMS 9 & 11 THRU 13)
14	0090-00903-9500	25¢ WINDOW (2 REQ'D.)
15	0090-00143-00XF	COIN PLEX RETAINER
16	0017-00003-0219	12 VOLT LAMP — G.E. #194 (2 REQ'D.)
17	0017-00031-0048	WEDGE SOCKET W/BRKT. (2 REQ'D.)
18	A090-00100-0000	BRKT. ASSY.
19	0017-00103-0084	#6-32 HEX NUT W/SEMS (4 REQ'D.)
20	A090-00089-0000	COIN METER W/DIODE
21	0017-00101-0124	#6 x 1/4 UNSLOT. HEX HD. SCR. (4 REQ'D.)
26	A090-00087-0000	COIN CHUTE & TOP ASSY. (2 REQ'D.)
27	0010-00134-0000	SPRING
28	0010-00181-0000	SPRING
29	0017-00007-0083	1/8 x 1-5/8 ROLL PIN
30	0090-00129-00XF	PIVOT POST
31	0090-00167-00XF	PIVOT LEVER
32	0093-00155-00XF	REJECT LEVER
33	0017-00100-0018	E-RING
	A090-00088-0000	REJECT LEVER ASSY. (2 REQ'D.) (ITEMS 30 THRU 33)
34	A090-00105-0000	COIN ACCEPTOR FRAME ASSY. (2 REQ'D.)
35	0017-00005-0003	COIN ACCEPTOR W/STRING CUTTER (2 REQ'D.) (OR)
35	0017-00005-0211	COIN ACCEPTOR W/ANTI STRING DEVICE (2 REQ'D.) (OR)
35	0017-00005-0214	COIN ACCEPTOR W/STRING CUTTER (2 REQ'D.)
36	A090-00064-0000	ANTI-PENNY DEVICE
37	0017-00101-0099	#6 x 1/4 SLT. HEX HD. M.S. (2 REQ'D.)
38	0090-00162-00XF	COIN SWITCH MTG. BRKT.
39	0017-00005-0203	COIN SWITCH CHUTE
40	0017-00005-0195	COIN SWITCH
41	0010-00599-0000	COIN SWITCH WIRE
42	0017-00007-0132	PUSH-ON RING
	A090-00059-0400	COIN SWITCH & WIRE ASSY. (ITEMS 40 THRU 42)
43	0017-00101-0147	#4-40 x 3/4 PHIL. PAN. HD. M.S. (2 REQ'D.)
	A090-00077-0000	COIN GUIDE & SWITCH ASSY. (ITEMS 38 THRU 43)

VI Technical Troubleshooting

Introduction

The most common problems occur in harness components such as the coin acceptor, player controls, interconnecting wiring, etc. The TV monitor and PCB computer cause their share of problems too, but not as much as the harness and its component parts. TV monitor troubleshooting will not be covered here because it is covered in that section of this manual.

As you already know, the PCB computer is a complex device with a number of different circuits. Some circuits remain basically the same among games, but overall there are a great many differences between them. PCB troubleshooting procedures, therefore, can be lengthy and will differ greatly among games. However, some basic Z-80 CPU information is involved in this section.

General Suggestions

The first step in any troubleshooting procedure is correctly identifying the malfunction's symptoms. This includes not only the circuits or features malfunctioning, but also those still operational. A carefully trained eye will pick up other clues as well. For instance, a game in which the computer functions fail completely just after money was collected may have a quarter shorting the PCB traces. Often, an experienced troubleshooter will be able to spot the cause of the problem even before opening the cabinet.

After all the clues are carefully considered, the possible malfunctioning areas can be narrowed down to one or two good suspects. Those areas can be examined by a process of elimination until the cause of the malfunction is discovered.

Harness Component Troubleshooting

Typical problems falling in this category are coin and credit problems, power problems and failure of individual features.

NO GAME CREDIT

For example, your prospective player inserts his quarter and is not awarded a game. The first item to check is if the quarter is returned. If the quarter is returned, the malfunction most certainly lies in the coin acceptor itself. First, use a set of test coins (both old and new) to ascertain that the player's coin is not undersize or underweight. If your test coins are also returned, coin acceptor servicing is indicated. Generally, the cause of this particular problem is a maladjusted magnet gate. Normally, this will mean slightly closing the magnet gate a little by turning the adjusting screw out a bit (see section on coin acceptor for more details).

If the quarter is not returned and there is no game credit, the cause of the malfunction may be in one of several areas. First try operating the coin return button; if the coin is returned, the problem is most likely in the magnet gate. Enlarge the gap according to the coin acceptor service procedures. If this does not cure the problem, remove the coin acceptor, clean it and perform the major adjustment procedure.

If the trapped coin is not returned when the wiper lever is actuated, you may have an acceptor jammed by a slug, gummed up with beer, a jammed coin chute, or mechanical failure of the acceptor mechanism. In this case, first check for the slug that will generally be trapped against the magnet. If so, simply remove the slug and test the acceptor. If the chute is blocked, remove the acceptor and remove the jammed coins. If there is actual failure of the acceptor, remove the unit and repair as indicated in the coin acceptor service procedures.

If the coin is making its way through the acceptor (that is, falling into the coin box), yet there is still no game credit, you either have a mechanical failure of the coin switch or electrical failure of the coin and credit circuits. The first place to begin is by checking the coin switch. Most of these switches are the make/break variety of micro switch, which is checked by testing for continuity between the NO, NC, and C terminals. When not actuated, the NC and C terminals should be continuous and the NO terminal open. When operated, the NO and C terminals should close and the NC should be open. If the coin switch checks out, examine the connections to the terminals to make sure there is good contact. If necessary, use the continuity tester and check from the terminal lug on the switch to the associated PCB trace. This will tell you if there is a continuous line all the way to the credit circuit.

If the coin switch wires do not check out, the problem is in the computer — most likely in the coin and credit circuitry.

If you do get game credit when a coin is deposited, but the game will not start when the start switch is pressed, you may have a problem in the start switch, the interconnecting wiring or in the computer. First check the switch. If the switch is OK, proceed to check the wiring. Again, make sure you go from the terminal lug on the switch to the PCB trace. This way, you will check the terminal contact as well as PCB edge connector contact. If the wiring is continuous, proceed to check the PCB credit circuit. If not, check each section of the wiring, until the discontinuity is located. If the wiring is OK, the problem must lie in the computer.

Transformer and Line Voltage Problems

Your machine must have the correct line voltage to operate properly. If the line voltage drops too low, a circuit in the computer will disable game credit. The point at which the computer will fail to work will vary some from game to game, but no game will work on line voltage that drops below 105 VAC.

Low line voltage may have many causes. Line voltage normally fluctuates a certain amount during the day as the total usage varies. Peak usage times occur mainly at dawn or dusk, so if your machine's malfunction seems to be related to the time of day, this may be a factor. A large load connected to the same line as the game (such as a large air conditioner or other device with an exceptionally large motor) may drop the line voltage significantly when starting up. This drop can result in an intermittent credit problem. In addition, poor connections in the location wiring, plug, or line cord may also cause a significant drop in power. Cold solder joints in the game's harness, especially in areas like the transformer connections, interlock switch, or fuse block, may also produce the same results, although probably on a more permanent basis.

Sometimes location owners (especially in bars) replace light switches with dimmer rheostats, and the game is sometimes on the same line. Obviously, the voltage available to the game is going to drop dramatically when the dimmer is turned.

In any case, the way to check for correct line voltage is with your VOM. Set the VOM to 250 VAC and stick the probes in the wall receptacle. If it's OK here, check the transformer primary connections. If you do not get 117 VAC, examine the solder joints on the transformer, fuse block, and interlock switch. If you do get 117 VAC, the problem must be either in the transformer, harness connections, or in the PCB power supply.

If you suspect the transformer, check its secondaries with the VOM set to 50 VAC and correlate the readings with the legend on the side of the transformer. The transformer must also be correctly grounded, so check the ground potential as well, especially if there is a hum bar rolling up or down the TV screen.

HARNESS PROBLEMS

Other harness problems include blowing fuses and malfunctioning controls. The repeating blown-fuse problem can sometimes be quite exasperating to solve, for short circuits have the tendency to occur in areas almost impossible to find. First, try inserting a new fuse, as old fuses age and blow without cause. If the new one also blows, you definitely have a short.

The best way to approach this problem is by turning the power off and disconnecting devices that may be causing the problem, such as the TV, transformer, and PCB. Disconnect the devices by pulling off their connectors, but do not allow them to touch. If necessary, insulate them with small pieces of electrical tape. Then, connect your VOM across the terminals of the fuse block (all electrical power shut off), and set it to one of the resistance scales. This will save blowing a fuse each time you want to check the circuit.

If the VOM reveals that disconnecting the devices removed the short, reconnect the devices one by one until the short returns. The last device connected is the one that is at fault. If the VOM reads a short even after the devices are disconnected, the fault must lie in the harness itself, and only patient exploration will reveal its location. First, carefully examine all the wiring, looking for terminals that may be touching, metal objects such as coins shorting connections or burned insulation. If necessary, use the VOM to check each suspected wire.

MALFUNCTIONING CONTROLS

One of the most common problems here is a bad potentiometer. Typically, a bad pot will cause the image to jump as it reaches a certain point. The only cure for this one is to install a new pot.

If a feature that is operated by a switch (for example, joysticks, foot pedals, control panel buttons) does not operate at all, check the switch with a VOM or continuity tester to verify its operation. If the switch does not check out, replace it. If the switch is OK, you should suspect the input to the switch from the PCB. In this case, get out the harness and logic schematics and check to see what kind of input it is. In many cases, the input will be +5 VDC. If so, use the VOM to check its presence. Normally, the switch is used to pull a +5 VDC line LOW to GND or to pull a LOW line HIGH. If the PCB output is missing, check the wire length from the PCB. If you find the signal at the PCB trace, the wire length or connection is at fault. If not, begin exploring the PCB using the logic schematics.

A Glossary of Microprocessor Terms

MICROPROCESSOR — one or several microcircuits that perform the function of a computer's CPU. Sections of the circuit have arithmetic and comparative functions that perform computations and executive instructions.

CPU — central-processing unit. A computing system's "brain", whose arithmetic, control and logic elements direct functions and perform computations. The microprocessor section of a microcomputer is on one chip or several chips.

PROM — programmable read-only memory. User permanently sets binary on-off bits in each cell by selectively fusing or not fusing electrical links. Nonerasable. Used for low-volume applications.

EPROM — erasable, programmable, read-only memory. Can be erased by ultraviolet light bath, then reprogrammed. Frequently used during design and development to get programs debugged, then replaced by ROM for mass production.

ROM — read-only memory. The program, or binary on-off bit pattern, is set into ROM during manufacture, usually as part of the last metal layer put onto the chip. Nonerasable. Typical ROM's contain up to 16,000 bits of data to serve as the microprocessor's basic instructions.

RAM — random-access memory. Stores binary bits as electrical charges in transistor memory cells. Can be read or modified through the CPU. Stores input instructions and results. Erased when power is turned off.

LSI — large scale integration. Formation of hundreds or thousands of so-called gate circuits on semiconductor chips. Very large scale integration (VLS) involves microcircuits with the greatest component density.

MOS — metal-oxide semiconductor. A layered construction technique for integrated circuits that achieves high component densities. Variations in MOS chip structures create circuits with speed and low-power requirements, or other advantages (static will damage a MOS chip).

Introduction to the Z-80 CPU

The term "microcomputer" has been used to describe virtually every type of small computing device designed within the last few years. This term has been applied to everything from simple "microprogrammed" controllers constructed out of TTL MSI up to low end minicomputers with a portion of the CPU constructed out of TTL LSI "bit slices." However, the major impact of the LSI technology within the last few years has been with MOS LSI. With this technology, it is possible to fabricate complete and very powerful computer systems with only a few MOS LSI components.

The Zilog Z-80 family of components can be configured with any type of standard semiconductor memory to generate computer systems with an extremely wide range of capabilities. For example, as few as two LSI circuits and three standard TTL MSI packages can be combined to form a simple controller. With additional memory and I/O devices a computer can be constructed with capabilities that only a minicomputer could previously deliver.

New products using the MOS LSI microcomputer are being developed at an extraordinary rate. The Zilog Z-80 component set has been designed to fit into this market through the following factors:

1. The Z-80 is fully software compatible with the popular 8080A CPU.
2. Existing designs can be easily converted to include the Z-80.
3. The Z-80 component set is at present superior in both software and hardware capabilities to any other microcomputer system on the market today.
4. For increased throughput the Z80A operating at a 4 MHZ clock rate offers the user significant speed advantages.

Microcomputer systems are extremely simple to construct using Z-80 components. Any such system consists of three parts:

1. **CPU (Central Processing Unit)**
2. **Memory**
3. **Interface Circuits to peripheral devices**

The CPU is the heart of the system. Its function is to obtain instructions from the memory and perform the desired operations. The memory is used to contain instructions and in most cases data that is to be processed. For example, a typical instruction sequence may be to read data from a specific peripheral device, store it in a location in memory, check the parity and write it out to another peripheral device. Note that the Zilog component set includes the CPU and various general purpose I/O device controllers, while a wide range of memory devices may be used from any source. Thus, all required components can be connected together in a very simple manner with virtually no other external logic.

General Purpose Registers

There are two matched sets of general purpose registers, each set containing six 8-bit registers that may be used individually as 8-bit registers or as 16-bit register pairs by the programmer. One set is called BC, DE and HL while the complementary set is called BC', DE' and HL'. At any one time the programmer can select either set of registers to work with through a single exchange command for the entire set. In systems where fast interrupt response is required, one set of general purpose registers and an accumulator/flag register may be reserved for handling this very fast routine. Only a simple exchange command need be executed to go between the routines. This greatly reduces interrupt service time by eliminating the requirement for saving and retrieving register contents in the external stack during interrupt or subroutine processing. These general purpose registers are used for a wide range of applications by the programmer. They also simplify programming, especially in ROM based systems where little external read/write memory is available.

Arithmetic & Logic Unit (ALU)

The 8-bit arithmetic and logical instructions of the CPU are executed in the ALU. Internally the ALU communicates with the registers and the external data bus on the internal data bus. The type of functions performed by the ALU include:

Add	Left or right shifts or rotates (arithmetic and logical)
Subtract	Increment
Logical AND	Decrement
Logical OR	Set bit
Logical Exlusive OR	Reset bit
Compare	Test bit

Instruction Register and CPU Control

As each instruction is fetched from memory, it is placed in the instruction register and decoded. The control sections performs this function and then generates and supplies all of the control signals necessary to read or write data from or to the registers, control the ALU and provide all required external control signals.

Z-80 CPU Pin Description

The Z-80 CPU is packaged in an industry standard 40 pin Dual In-Line Package. The I/O pins are shown in the below figure and the function of each is described.

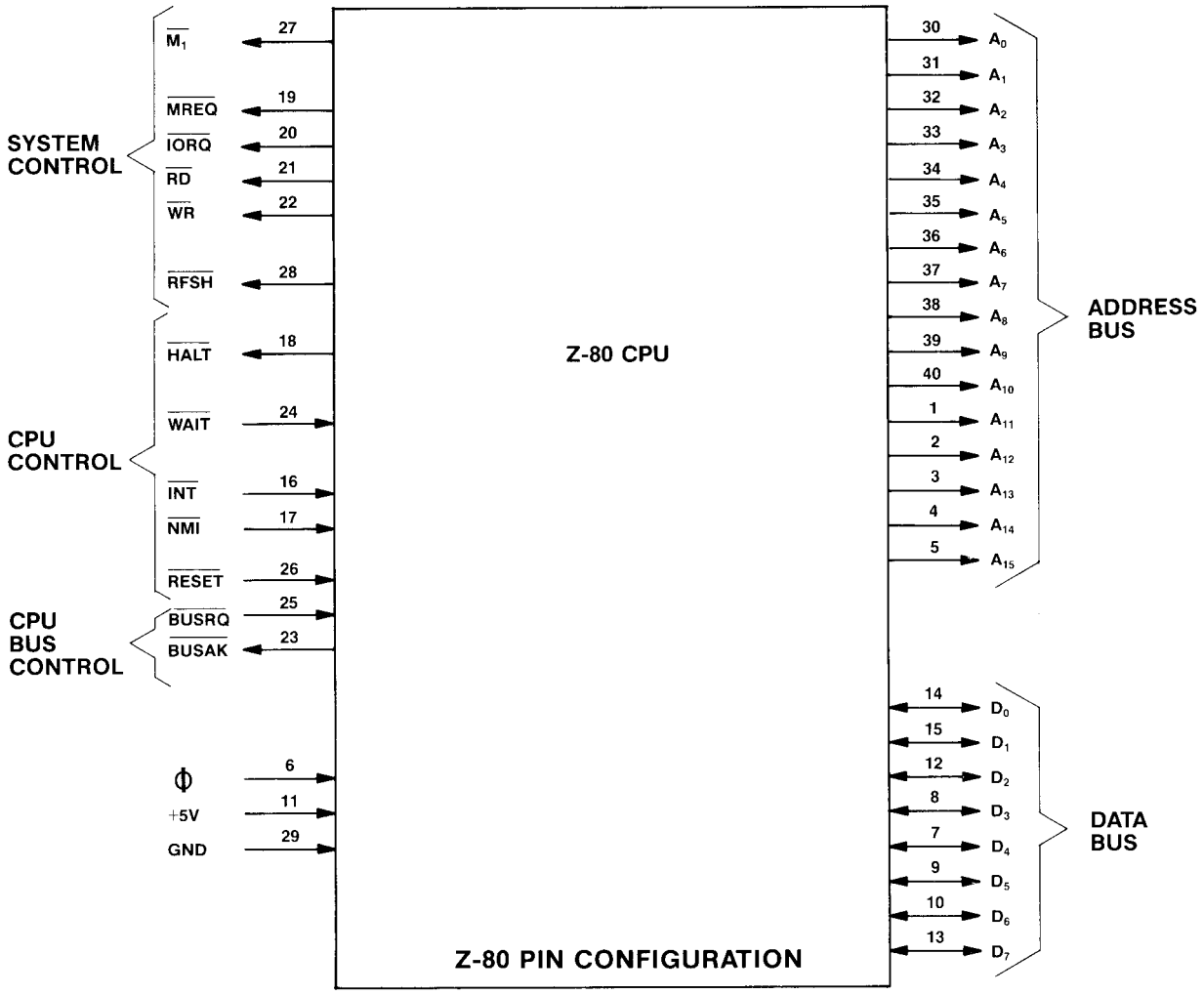

A_0-A_{15}
(Address Bus)
Tri-state output, active high. A_0-A_{15} constitute a 16-bit address bus. The address bus provides the address for memory (up to 64K bytes) data exchanges and for I/O device data exchanges. I/O addressing uses the 8 lower address bits to allow the user to directly select up to 256 input or 256 output ports. A_0 is the least significant address bit. During refresh time, the lower 7 bits contain a valid refresh address.

D_0-D_7
(Data Bus)
Tri-state input/output, active high. D_0-D_7 constitute an 8-bit bidirectional data bus. The data bus is used for data exchanges with memory and I/O devices.

M_1
(Machine Cycle one)
Output, active low. $\overline{M_1}$ indicates that the current machine cycle is the OP code fetch cycle of an instruction execution. Note that during execution of 2-byte op-codes, $\overline{M1}$ is generated as each op code byte is fetched. These two byte op-codes always begin with CBH, DDH, EDH or FDH. $\overline{M1}$ also occurs with $\overline{IORQ}$ to indicate an interrupt acknowledge cycle.

MREQ
(Memory Request)
Tri-state output, active low. The memory request signal indicates that the address bus holds a valid address for a memory read or memory write operation.

IORQ
(Input/Output Request)
Tri-state output, active low. The $\overline{IORQ}$ signal indicates that the lower half of the address bus holds a valid I/O address for a I/O read or write operation. An $\overline{IORQ}$ signal is also generated with an $\overline{M1}$ signal when an interrupt is being acknowledged to indicate that an interrupt response vector can be placed on the data bus. Interrupt Acknowledge operations occur during M_1 time while I/O operations never occur during M_1 time.

RD
(Memory Read)
Tri-state output, active low. $\overline{RD}$ indicates that the CPU wants to read data from memory or an I/O device. The addressed I/O device or memory should use this signal to gate data onto the CPU data bus.

WR
(Memory Write)
Tri-state output, active low. $\overline{WR}$ indicates that the CPU data bus holds valid data to be stored in the addressed memory or I/O device.

RFSH
(Refresh)
Output, active low. $\overline{RFSH}$ indicates that the lower 7 bits of the address bus contain a refresh address for dynamic memories and the current MREQ signal should be used to do a refresh read to all dynamic memories.

HALT
(Halt state)
Output, active low. $\overline{HALT}$ indicates that the CPU has executed a HALT software instruction and is awaiting either a non maskable or a maskable interrupt (with the mask enabled) before operation can resume. While halted, the CPU executes NOP's to maintain memory refresh activity.

WAIT
(Wait)
Input, active low. $\overline{WAIT}$ indicates to the Z-80 CPU that the addressed memory or I/O devices are not ready for a data transfer. The CPU continues to enter wait states for as long as this signal is active. This signal allows memory or I/O devices of any speed to be synchronized to the CPU.

INT
(Interrupt Request)
Input, active low. The Interrupt Request signal is generated by I/O devices. A request will be honored at the end of the current instruction if the internal software controlled interrupt enable flip-flop (IFF) is enabled and if the $\overline{BUSRQ}$ signal is not active. When the CPU accepts the interrupt, an acknowledge signal ($\overline{IORQ}$ during M_1 time) is sent out at the beginning of the next instruction cycle. The CPU can respond to an interrupt in three different modes that are described in detail in section 5.4 (CPU Control Instructions).

NMI
(Non-Maskable Interrupt)
Input, negative edge triggered. The non maskable interrupt request line has a higher priority than $\overline{INT}$ and is always recognized at the end of the current instruction, independent of the status of the interrupt enable flip-flop. $\overline{NMI}$ automatically forces the Z-80 CPU to restart to location 0066H. The program counter is automatically saved in the external stack so that the user can return to the program that was interrupted. Note that continuous $\overline{WAIT}$ cycles can prevent the current instruction from ending, and that a $\overline{BUSRQ}$ will override a $\overline{NMI}$.

RESET
Input, active low. RESET forces the program counter to zero and initializes the CPU. The CPU initialization includes:

1) Disable the interrupt enable flip-flop

2) Set Register I = 00_H

3) Set Register R = 00_H

4) Set Interrupt Mode 0

During reset time, the address bus and data bus go to a high impedance state and all control ouput signals go to the inactive state.

BUSRQ
(Bus Request)

Input, active low. The bus request signal is used to request the CPU address bus, data bus and tri-state output control signals to go to a high impedance state so that other devices can control these buses. When BUSRQ is activated, the CPU will set these buses to a high impedance state as soon as the current CPU machine cycle is terminated.

BUSAK
(Bus Acknowledge)

Output, active low. Bus acknowledge is used to indicate to the requesting device that the CPU address bus, data bus and tri-state control bus signals have been set to their high impedance state and the external device can now control these signals.

CLK
(Clock)

Single phase TTL level clock which requires only a 330 ohm pull-up resistor to +5 volts to meet all clock requirements.

VII. Coin Door Maintenance

SPECIAL NOTE: If you have any questions about the coin acceptors in your game(s), please feel free to contact their manufacturers. Each manufacturer's name is **PROMINENTLY** imprinted on every acceptor mechanism.

Metal mechanisms only:
COIN MECHANISMS, INC.
817 Industrial Drive
Elmhurst, IL 60126
Phone (312) 279-9150

Metal and Plastic mechanisms:
COINCO COIN ACCEPTORS, INC.
860 Eagle Drive
Bensenville, IL 60106
Phone (312) 766-6781

COIN DOOR MAINTENANCE

METAL COIN ACCEPTOR MECHANISMS

Periodically, the metal coin acceptor mechanism(s) must be removed from the coin door and cleaned.

1. **Make sure the power to the game is off.**
2. Unlock and open the coin door.
3. Remove the coin acceptor mechanism as shown in Figure 7-1.
   - ☐ Push down on the two spring loaded latches.
   - ☐ While holding the latches down, pull the top of the coin acceptor mechanism toward you.
   - ☐ Release the latches and lift out the coin acceptor mechanism.

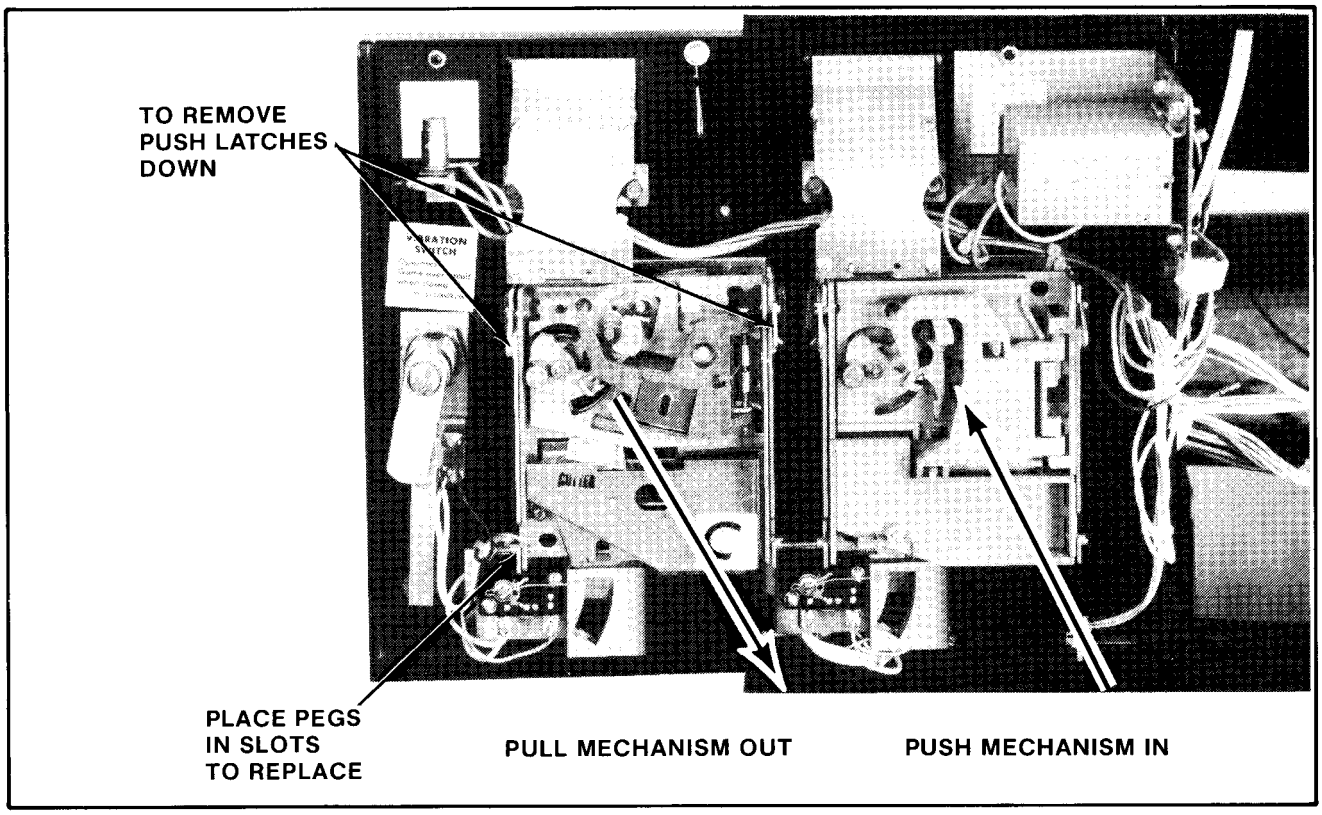

Figure 7-1 Removing and replacing coin acceptor

VII. Coin Door Maintenance

SPECIAL NOTE: If you have any questions about the coin acceptors in your game(s), please feel free to contact their manufacturers. Each manufacturer's name is **PROMINENTLY** imprinted on every acceptor mechanism.

Metal mechanisms only:
COIN MECHANISMS, INC.
817 Industrial Drive
Elmhurst, IL 60126
Phone (312) 279-9150

Metal and Plastic mechanisms:
COINCO COIN ACCEPTORS, INC.
860 Eagle Drive
Bensenville, IL 60106
Phone (312) 766-6781

COIN DOOR MAINTENANCE

METAL COIN ACCEPTOR MECHANISMS

Periodically, the metal coin acceptor mechanism(s) must be removed from the coin door and cleaned.

1. **Make sure the power to the game is off.**
2. Unlock and open the coin door.
3. Remove the coin acceptor mechanism as shown in Figure 7-1.
   - ☐ Push down on the two spring loaded latches.
   - ☐ While holding the latches down, pull the top of the coin acceptor mechanism toward you.
   - ☐ Release the latches and lift out the coin acceptor mechanism.

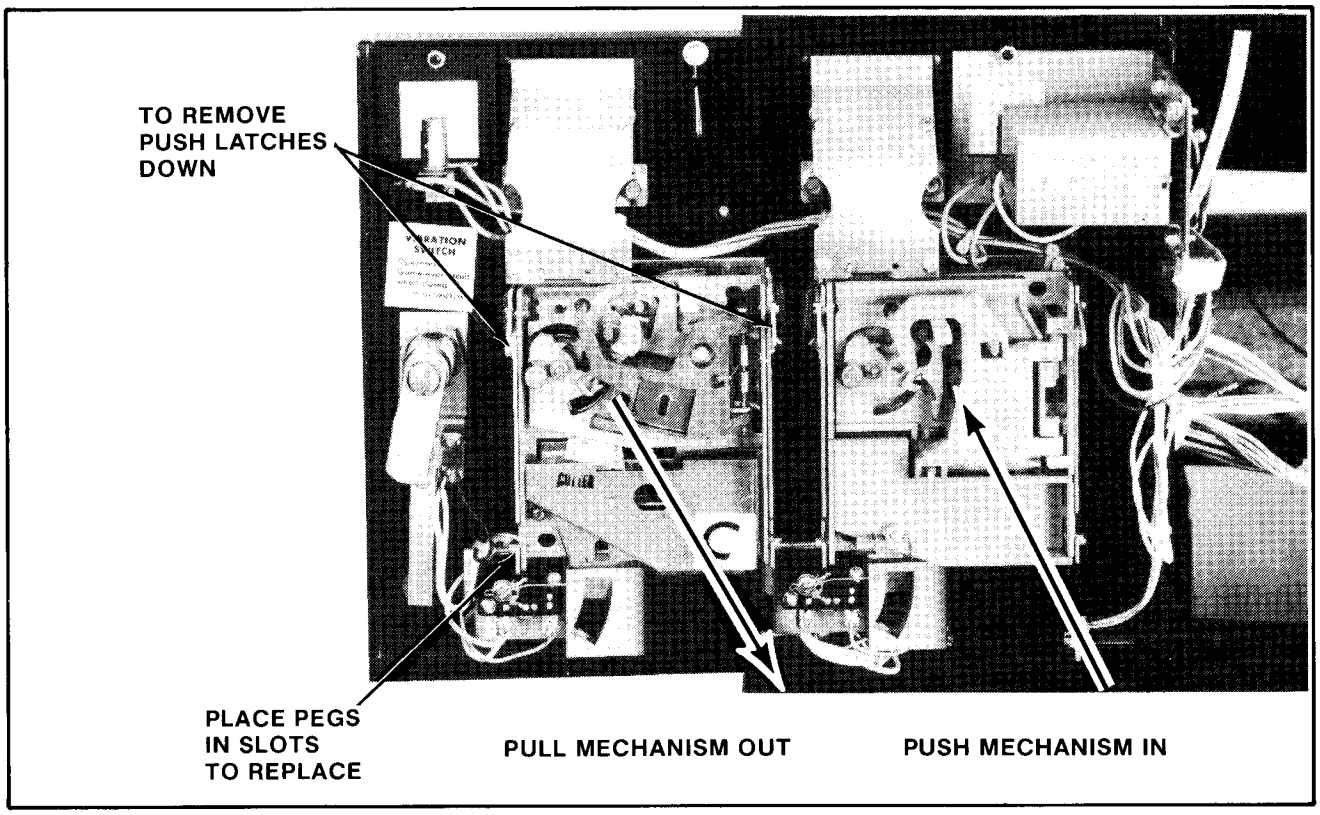

Figure 7-1 Removing and replacing coin acceptor

4. Clean the magnet of all foreign particles. See Figure 7-2.
   - ☐ This may be accomplished by swinging the gate open as shown in the above figure.
5. Remove the cradles and undersize levers and clean the bushings. (A pipe cleaner makes a good bushing cleaner.)
   - ☐ Also clean the pivot pin.
6. Whenever needed, the coin acceptor should be cleaned with hot water and cleanser in the following manner:
   - ☐ Place the coin acceptor in boiling water for about ten minutes.

CAUTION: BE CAREFUL NOT TO BURN YOURSELF.

- ☐ Next, use a brush and kitchen cleaner to remove all remaining foreign matter from the unit.
- ☐ Rinse the coin acceptor in clean boiling water.
- ☐ Dry the coin acceptor thoroughly by using filtered compressed air to blow it dry.

NOTE: The reason we recommend using boiling water is that it evaporates faster than cold water and speeds drying time.

7. To lubricate the coin acceptor:
   - ☐ Use **ONLY** powdered graphite and put it **ONLY** on the moving parts of the coin acceptor. These parts are called out in Figure 7-3.
   - ☐ Be extremely careful to keep the powdered graphite away from paths that are traveled by the coins.

— WARNING —
DO NOT USE OIL TO LUBRICATE THE COIN ACCEPTOR.

8. Check the coin chute for obstructions such as: paper, gum, etc.
9. Reinstall the coin acceptor to the coin door. See Figure 7-1.
   - ☐ Place the two pegs at the coin acceptor's base into their retaining slots.
   - ☐ Now push the top of the coin acceptor toward the coin door until it snaps in place and is held there by the two spring loaded latches.
10. Close and lock the coin door.

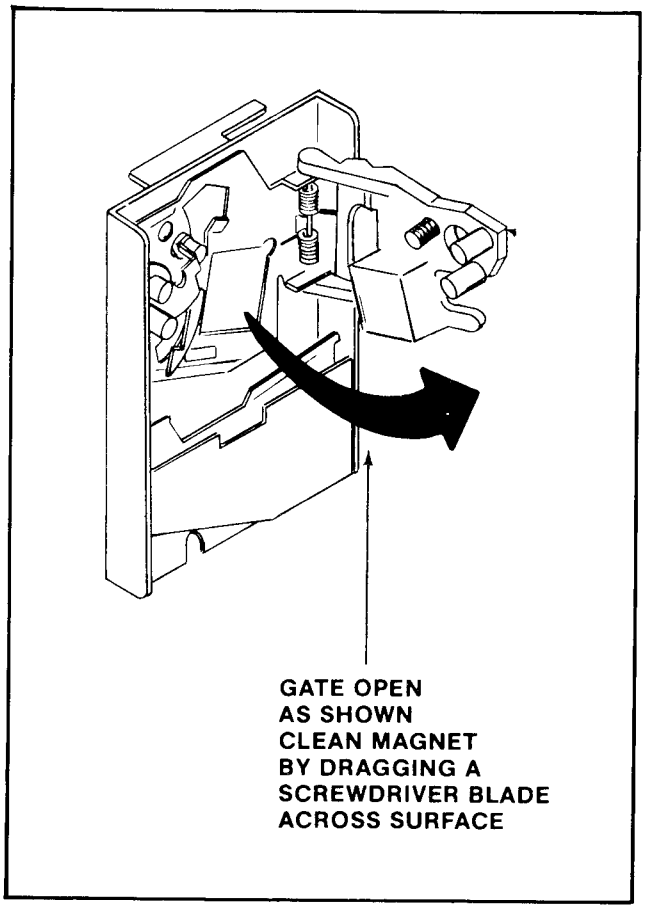

Figure 7-2 Cleaning the metal coin acceptor

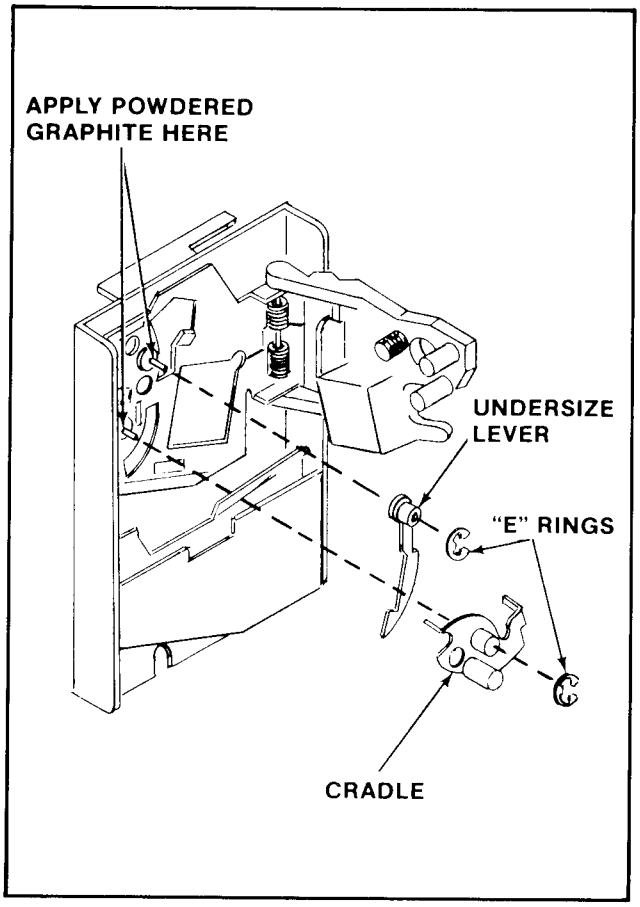

Figure 7-3 Lubricating the metal coin acceptor

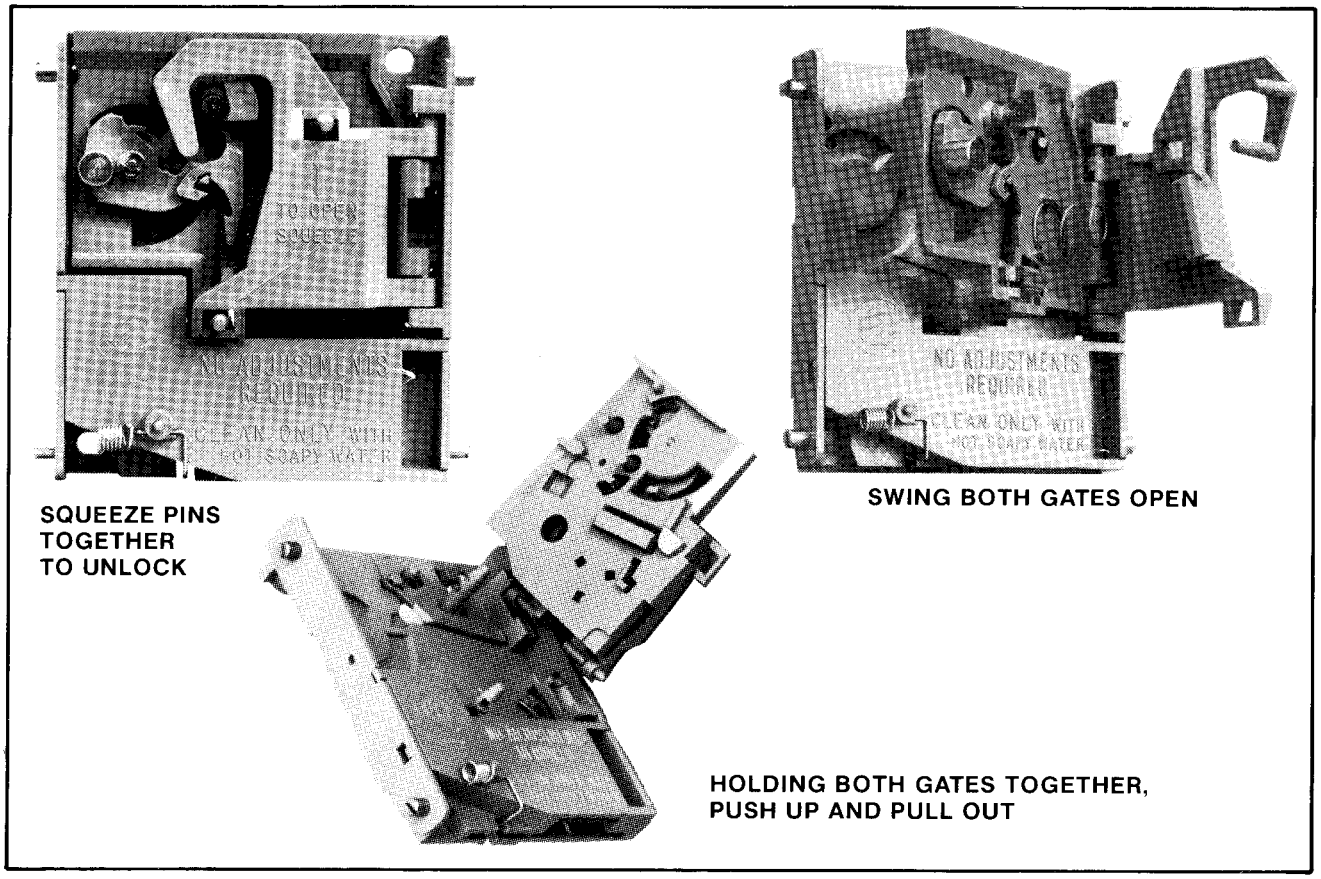

Figure 7-4 Opening the plastic coin acceptor

PLASTIC COIN ACCEPTOR MECHANISMS

The plastic coin acceptor mechanism(s) must be removed periodically from the coin door and cleaned.

1. **Make sure the power to the game is off.**
2. Unlock and open the coin door.
3. Remove the coin acceptor mechanism(s) as shown in Figure 7-1.
   - ☐ Push down on the two spring loaded latches.
   - ☐ While holding the latches down, pull the top of the acceptor mechanism toward you.
   - ☐ Release the latches and lift out the mechanism.
4. Squeeze the two pins indicated in Figure 7-4 together to open the mechanism and break it down into its three basic parts.
   - ☐ Clean the mechanism in hot soapy water. It never rusts.
   - ☐ Rinse the mechanism in clean hot water and allow it to dry.
   - ☐ Reassemble the mechanism (it never needs lubrication).
5. Check the coin chute for obstructions such as: paper, gum, etc.
6. Reinstall the coin acceptor to the coin door. See Figure 7-5.
   - ☐ Place the two pegs at the coin acceptor's base into their retaining slots.
   - ☐ Now push the top of the coin acceptor toward the coin door until it snaps in place and is held there by the two spring loaded latches.
7. Close and lock the coin door.

NOTE: See Figure 7-6 for instructions on how to set the plastic coin acceptor mechanisms to either accept or reject Canadian quarters.

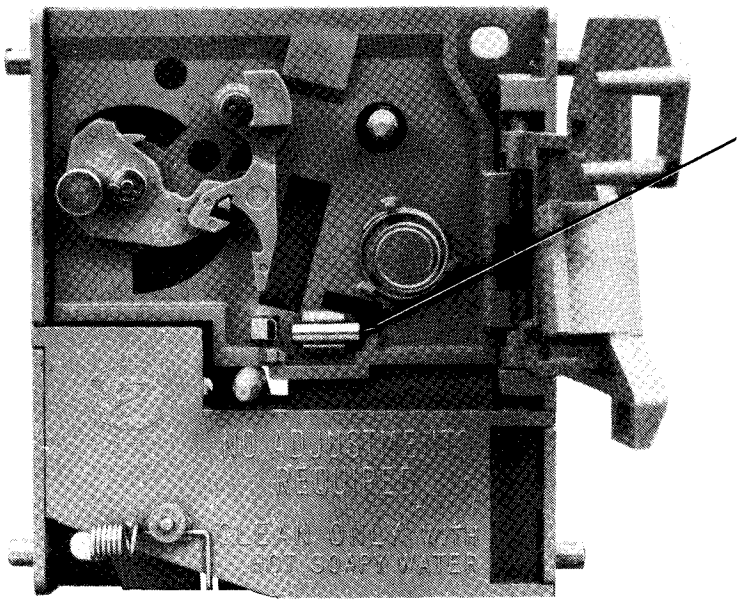

ACCEPTOR CAN BE SET TO ACCEPT U.S. QUARTERS ONLY OR BOTH U.S. AND CANADIAN QUARTERS.

MAGNET

SLIDE MAGNET TO EXTREME RIGHT (AS SHOWN) TO ACCEPT BOTH U.S. AND CANADIAN QUARTERS.

TO ACCEPT U.S. QUARTERS ONLY, SLIDE MAGNET TO EXTREME LEFT.

Figure 7-5 Changing the plastic coin acceptor to accept American or Canadian quarters.

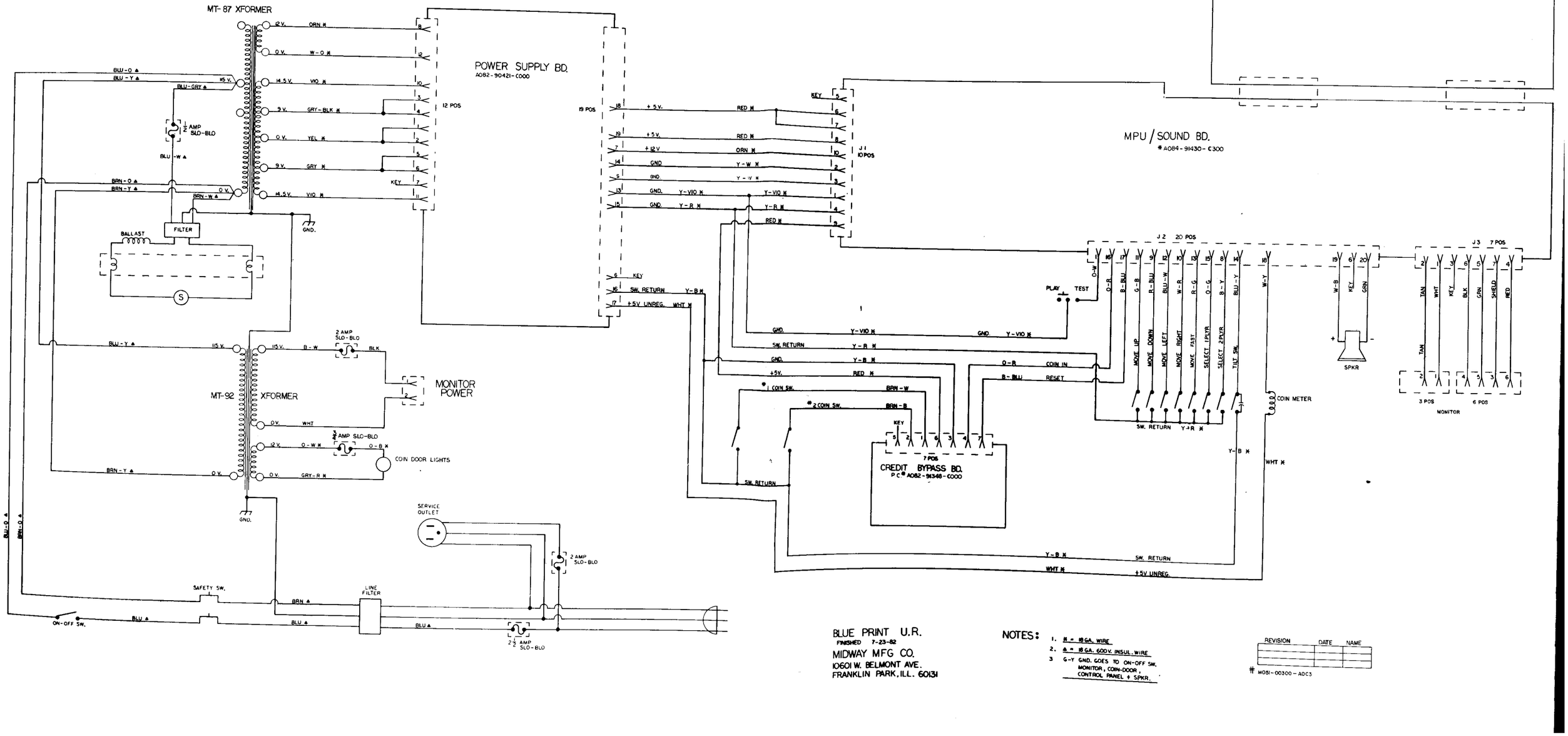

BLUE PRINT U.R.
FINISHED 7-23-82
MIDWAY MFG CO.
10601 W. BELMONT AVE.
FRANKLIN PARK, ILL. 60131

NOTES:
1. ✱ = #18 GA. WIRE
2. ▲ = #18 GA. 600V. INSUL. WIRE
3. G-Y GND. GOES TO ON-OFF SW. MONITOR, COIN-DOOR, CONTROL PANEL & SPKR.

REVISION	DATE	NAME

M081-00300-A0C3

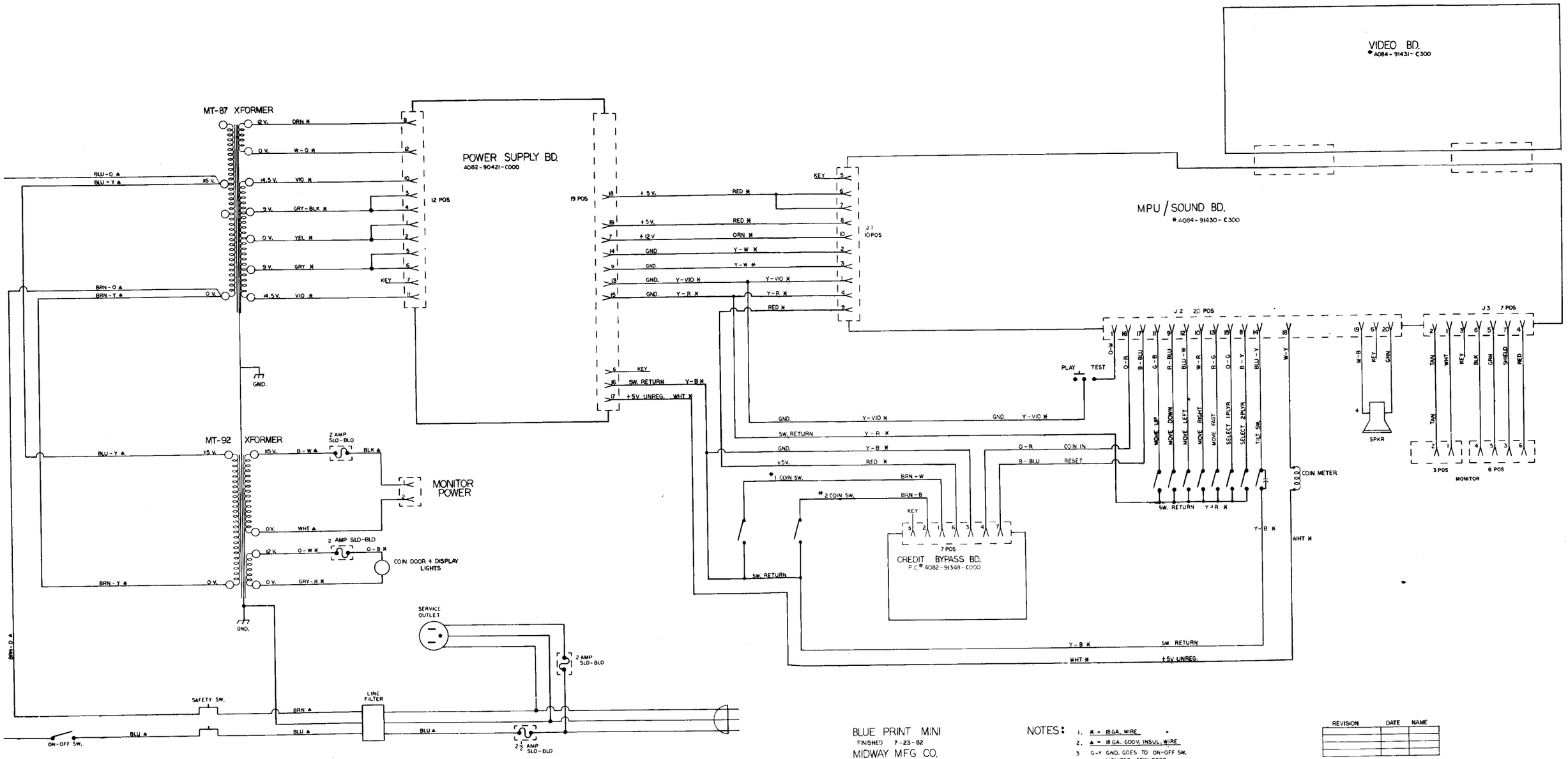

BLUE PRINT MINI
FINISHED 7-23-82
MIDWAY MFG CO.
10601 W. BELMONT AVE.
FRANKLIN PARK, ILL. 60131

NOTES:
1. # = 18 GA. WIRE
2. ▲ = 18 GA. 600V. INSUL. WIRE
3. G-Y GND. GOES TO ON-OFF SW. MONITOR, COIN-DOOR, CONTROL PANEL + SPKR.

REVISION	DATE	NAME

M091-00301-A003

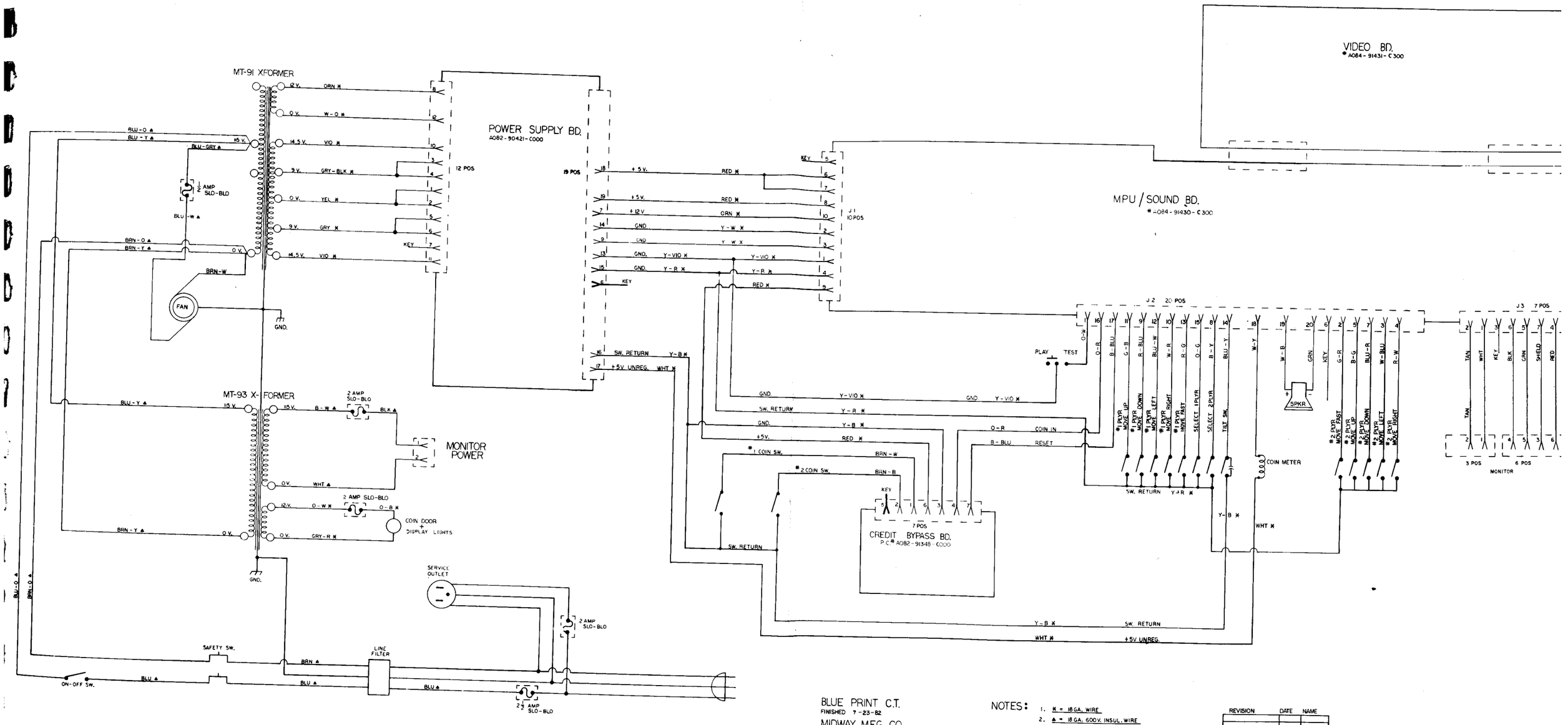

BLUE PRINT C.T.
FINISHED 7-23-82
MIDWAY MFG CO.
10601 W. BELMONT AVE.
FRANKLIN PARK, ILL. 60131

NOTES:
1. ✱ = 18 GA. WIRE
2. ▲ = 18 GA. 600V. INSUL. WIRE
3. G-Y GND. GOES TO ON-OFF SW. MONITOR, COIN-DOOR, CONTROL PANEL + SPKR.

REVISION	DATE	NAME

✱ M051-00302-A003

DESIGNATION LIST

DESIGNATION	DESCRIPTION
C100	10mf RD TANT
C101	0.47mf RD TANT 35V
C102	470mf AX ELEC
C104	25,000mf AX ELEC
C105	4.7mf RD TANT 35V
C106, C107	0.1mf
C111	0.1mf
C113	40,000mf AX ELEC
C114	470mf AX ELEC
C115	2200mf AX ELEC 25V
C116	4700mf AX ELEC 25 V
C117	47pf
C118	0.1mf
C121	0.1mf
R100	100 OHM 1/4W 5% CRB
R101	470 " "
R102	0.18 OHM 5W 5%
R103	0.16 OHM 5W 5%
R104	68 OHM 1/2W 5% CRB
R105	24 OHM 1/4W 5% CRB
R106	270 " "
R113	1.2K OHM 1/4W 5% CRB
R114	560 " "
R124	25 OHM 5W 10%
R125	68 OHM 1/2W 5% CRB.
10 OHM 1/4W 5% CRB	
1K " "	
6.2K " "	
1K " "	
150 OHM 2W 10%	
68 OHM 1/2W 5%	
100 OHM POT	
IN4001	
MR750	
IN4001	
AI5F 50V 5A	
2N2905	
LM305	
LM305	
FERRITE BEAD	
FERRITE BEAD MTG HDRW.	
2-20G SOLID WIRE	

DESIGNATION	DESCRIPTION
R126	
R127	
R128	
R129	
R132	
R134	
VR100, VR101, VR102	
D103	
D106, D107	
D108, D109	
D110, D111, D112, D113, D114, D115, D116	
Q102, Q104	
U2	
U5	
FB1, FB2	
FBMH1, FBMH2	
HSA1	HEATSINK ASSY.
MHHSA	HEATSINK ASSY. MTG. HDRW 2-4-40 X 10 SLT RND 4-WASHER, 4, 120-.250 OIB 2-4-40 HEX NUT THERMAL COMPOUND
F1	FUSE, 1/4 A. SLO-BLO
F2	FUSE, 1 AMP
F1, F2	FUSE CLIP W/STOP
J1	2 POS KK-156
J1, J2	5 POS " "
J1	13 POS " "
J2	6 POS " "
JW1, JW2, JW3	JUMPER WIRE
TW1, TW2	TIE WRAP
TW3, TW4	TIE WRAP
LB1	TAG, FUSE 1/4 A. SLO-BLO
LB2	TAG, FUSE 1 AMP
LB3	TAG, PWR. SPLY. I.D.

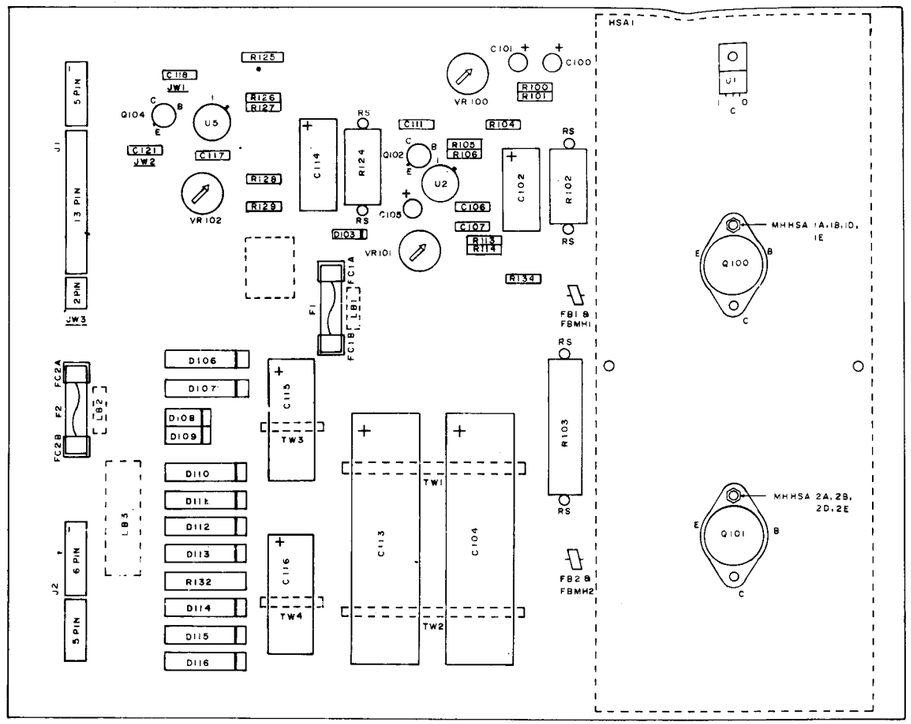

* NOTE: RS-RESISTOR SPACER

CROSS REFERENCE LIST

DESCRIPTION	QTY	DESIG. NOS.	PART NOS.
47 µf	1	C117	0945-00811-0100
0.1 µf	5	C106, C107, C111, C118, C121	0945-00811-0200
0.47 µf RD TANT 35 V	1	C101	0945-00816-1100
4.7 µf RD TANT 35 V	1	C105	0945-00811-0400
10 µf RD TANT	1	C100	0945-00816-1000
470 µf AX. ELEC.	2	C102, C114	0945-00816-0600
2200 µf AX. ELEC. 25 V	1	C115	0945-00816-1300
4700 µf AX. ELEC. 25 V	1	C116	0945-00811-0700
25000 µf AX. ELEC.	1	C104	0945-00816-1700
40000 µf AX. ELEC.	1	C113	0945-00816-1800
.16 OHM 15 W 5%	1	R103	0945-00815-0100
.18 " 5 W 5%	1	R102	0945-00815-0200
10 " 1/4 W 5% CRB	1	R126	0062-05183-1XXX
24 " "	1	R105	0062-06583-1XXX
25 " 5W 10%	1	R124	0945-00815-1000
68 " 1/2 W 5%	3	R104, R125, R134	0062-09803-1XXX
100 " 1/4 W 5% CRB	1	R100	0062-11083-1XXX
150 " 2W 10%	1	R132	0945-00812-0200
270 " 1/4 W 5%	1	R106	0062-13883-1XXX
470 OHM 1/4W 5%	1	R101	0062-15683-1XXX
560 " "	1	R114	0062-16283-1XXX
1K " "	2	R127, R129	0062-17983-1XXX
1.2 K " "	1	R113	0062-18383-1XXX
6.2 K OHM 1/4W 5%	1	R128	0062-21783-1XXX
100 OHM POT	3	VR100, VR101, VR102	0945-00814-0000
AI5F 50 V 5A DIODE	7	D110, D111, D112, D113, D114, D115, D116	0945-00804-0200
IN 4001	3	D103, D108, D109	0945-00804-0300
MR 750	2	D106, D107	0945-00804-0800
2N 2905	2	Q102, Q104	0945-00808-0300
LM 305	2	U2, U5	0945-00813-0100
FERRITE BEAD	2	FB1, FB2	0017-00009-0225
FERRITE MTG HARDWARE		FBMH1, FBMH2	
20G SOLID WIRE	2	FBMH1, FBMH2	0017-00033-0139
HEAT SINK ASSY	1	HSA 1	A945-00008-0100
HEAT SINK MTG HARDWARE		MHHSA	
4-40 X 10 SLT RND	2	HSA1	0017-00101-0727
WSH, 4, 120-250-018	4	HSA1	0017-00104-0071
4-40 HEX NUT	2	HSA1	0017-00103-0002
FUSE, 1/4 A SLO-BLO	1	F1	0017-00003-0446
FUSE, 1 AMP	1	F2	0017-00003-0001
FUSE CLIP W/STOP	4	F1, F2	0017-00071-0033
2 POS. KK-156 CONN.	1	J1	3000-16387-0200
5 POS. " "	2	J1, J2	3000-16387-0500
6 POS. " "	1	J2	3000-16387-0600
13 POS. " "	1	J1	3000-16387-1300
22 AWG. 2 1/2 IN.	3	JW1, JW2, JW3	0151-00087-0000
TIE WRAP 7 5/8 IN.	2	TW3, TW4	0945-00814-0300
TIE WRAP 10 3/4 IN.	2	TW1, TW2	0945-00814-0400
TAG, FUSE 1/4 A. SLO-BLO	1	LB1	M051-00945-A020
TAG, FUSE 1 AMP	1	LB2	M051-00945-A021
TAG, PWR. SPLY I.D.	1	LB3	M051-00945-A022
70 VA PWR. SPLY P.C.	1	———	A080-90421-C000
HEAT SINK ASS'Y	1	———	0017-00033-0139

REVISIONS

PROJECT ENG: J. JARON		USED ON BLUEPRINT	Bally / MIDWAY MFG. CO. FRANKLIN PK. ILL.
DO NOT SCALE DWG.	HEAT TREAT	SCALE FULL	NO. REQ'D 1 PER
DIM. TOLERANCES UNLESS SPECIFIED	DRN. BS	MAT'L.	ASSY DRWNG. MED P.S. 70 VA (A082-90421-C000)
CONCENTRICITY T.I.R.	CKD.	FINISH	PART NO. M051-00945-A031

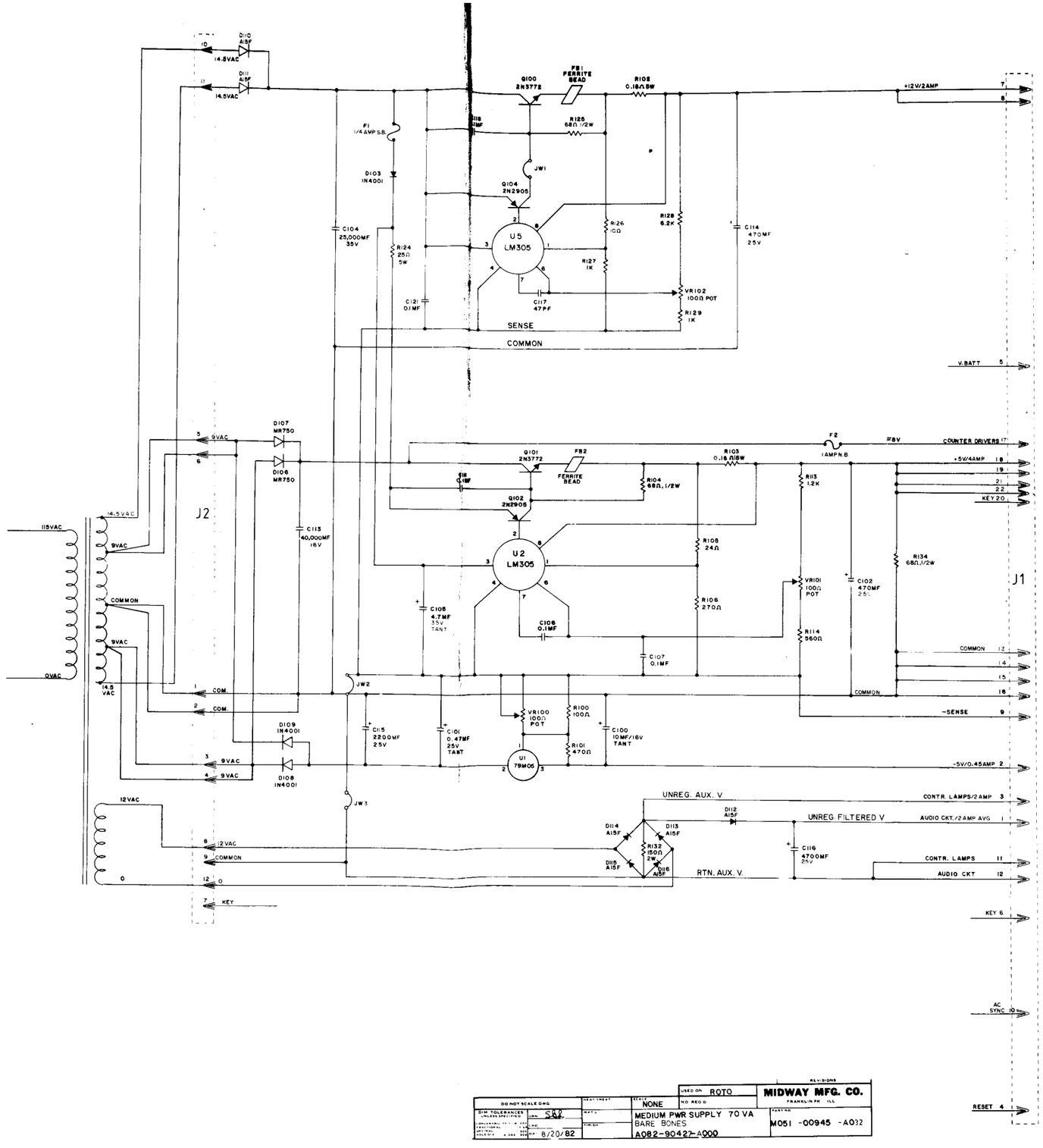

DO NOT SCALE DWG.	DEPARTMENT	USED ON ROTO	MIDWAY MFG. CO. FRANKLIN PK. ILL.
DIM. TOLERANCES UNLESS SPECIFIED	DRN. SAP	SCALE NONE	NO. REQ'D
DECIMAL .XX ± .010	APP'D	MEDIUM PWR SUPPLY 70 VA BARE BONES	PART NO. M051 -00945 -A032
DECIMAL .XXX ± .005	DATE 8/20/82	A082-90422-A000	

REVISIONS

DESIGNATION LIST

DESIGNATION	DESCRIPTION
CP1 - CP108	.1uf AX CER
C1	1000uf 25V AX ELEC
C2	330pf 50V CR DSC
R1 - R4	100 OHM 1/4W
R5 - R8	270 OHM 1/4W
R9, R10	1K OHM 1/4W
R11, R12	330 OHM 1/4W
R13 - R18	1K OHM 1/4W
0A	74LS08
1A	74LS32
2A	74LS02
3A-6A	74LS161
7A	74LS74
8A	74LS107
9A, 10A	74LS04
12A, 13A	74LS161
14A, 15A	74LS86
16A-18A	74S201
19A	74LS00
20A	74LS157
21A	74LS175
0B	74LS08
1B	74LS74
2B	74LS10
3B-6B	74LS86
7B, 8B	74LS283
9B	74LS08
10B	74LS273
11B	74LS32
12D, 13B	74LS161
14B, 15B	74LS86
16B-18B	74S201
19B	74LS32
20B	74LS175
21B	74LS158
0C	74LS32
1C, 2C	74LS166
3C	EPROM
6C, 7C	2114
8C-10C	74LS157
11C, 12C	2114
13C	74LS00
14C	74LS10
15C-17C	74LS00
18C, 19C	74LS273
20C	74LS139
21C	74LS107
0D	74LS157
1D, 2D	74LS166
3D	EPROM
6D, 7D	74LS245
8D, 9D	2114
10D, 11D	74LS157
12D	74LS245
13D	74LS273
14D	74LS157
15D, 16D	2114
17D, 18D, 20D	EPROM
21D	74LS273

DESIGNATION	DESCRIPTION
1E	74LS32
2E	74LS10
4E	74LS86
10E, 11E	74LS32
12E	74LS157
13E	74LS158
14E	74LS283
15E	74LS08
16E	74LS157
17E	74LS245
18E-20E	74LS166
21E	74LS157
2F	74LS00
4F	74LS08
11F	74LS04
12F	74LS27
13F	74LS86
14F	74LS283
15F	74LS273
16F	74LS174
17F	74LS20
18F-20F	74LS166
21F	74LS27
ICS 16A-18A	16-PIN IC SOCKET
" 16B-18B	16-PIN " "
" 3C	24-PIN " "
" 6C,7C	18-PIN " "
" 11C,12C	18-PIN " "
" 3D	24-PIN " "
" 8D,9D	18-PIN " "
" 15D,16D	18-PIN " "
" 17D,18D	24-PIN " "
" 20D	24-PIN " "
XTAL	10MHZ CRYSTAL
BB1, BB2	BUSS BAR
P1	50-PIN CONN., MALE
P2	20-PIN CONN., MALE

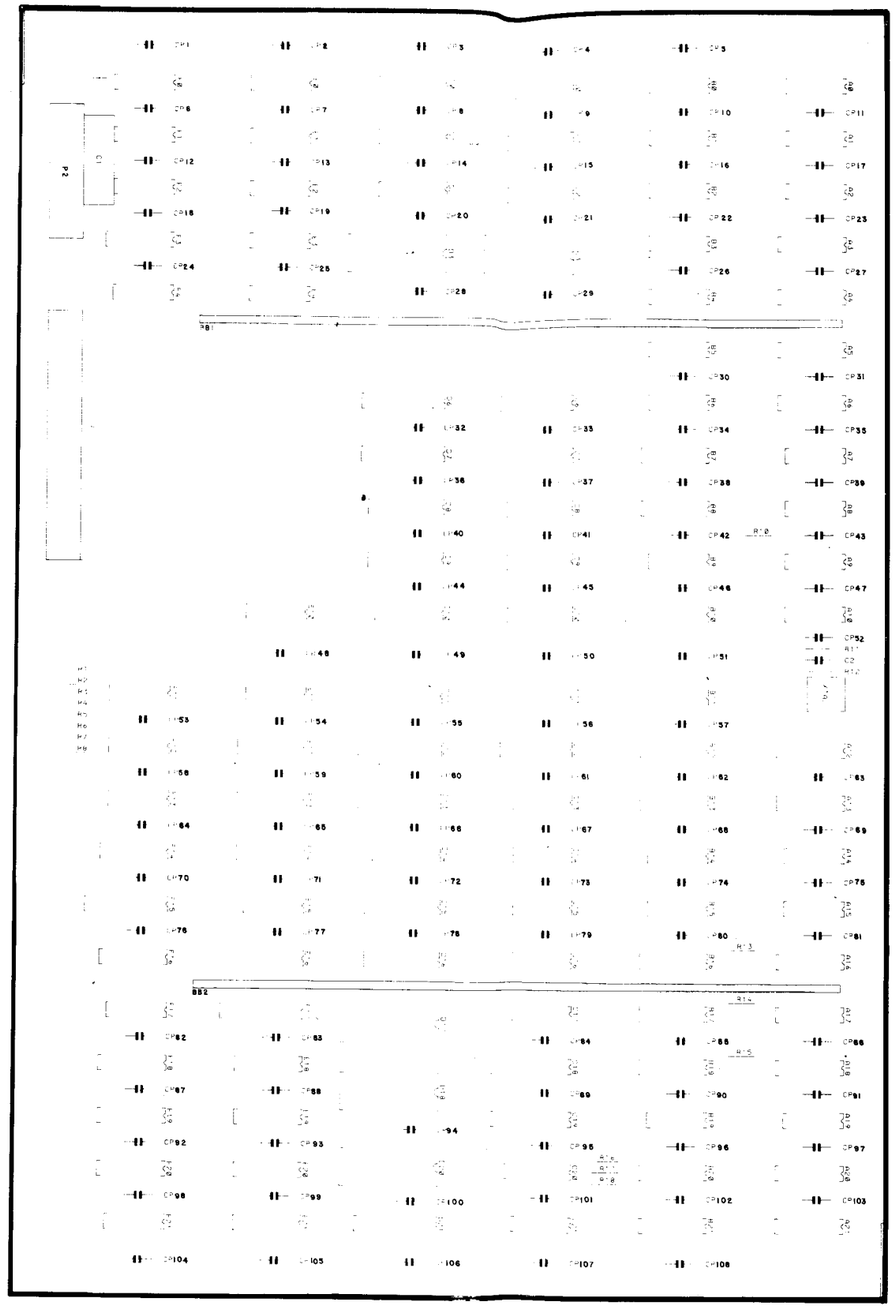

CROSS REFERENCE LIST

DESCRIPTION	QTY	DESIGNATION	PART NOS.
330pf 50V CR DSC	1	C2	0300-00800-1402
.1uf AX CER	108	CP1 - CP108	0300-00800-0700
1000uf AX ELEC	1	C1	0300-00800-1200
100 OHM 1/4W	4	R1-R4	0062-11083-1XXX
270 OHM 1/4W	4	R5-R8	0062-13883-1XXX
330 OHM 1/4W	2	R11, R12	0062-14483-1XXX
1K OHM 1/4W	8	R9, R10, R13-R18	0062-17983-1XXX
2114	8	6C,7C,11C,12C,8D, 9D,15D,16D	0300-00803-0041
74LS00	6	19A,13C,15C-17C, 2F	0300-00803-0027
74LS02	1	2A	0300-00803-0028
74LS04	3	9A,10A,11F	0300-00803-0029
74LS08	5	0A,0B,9B,15E,4F	0300-00803-0030
74LS10	3	2B,14C,2E	0300-00803-0051
74LS20	1	17F	0300-00803-0052
74LS27	2	12F,21F	0300-00803-0053
74LS32	7	1A,11B,19B,0C,1E, 10E,11E	0300-00803-0031
74LS74	2	7A,1B	0300-00803-0032
74LS86	10	14A,15A,3B-6B,14B 15B, 4E,13F	0300-00803-0054
74LS107	2	8A,21C	0300-00803-0055
74LS139	1	20C	0300-00803-0034
74LS157	11	20A,8C-10C,0D,10D, 11D,14D,12E,16E,21E	0300-00803-0050
74LS158	2	21B,13E	0300-00803-0049
74LS161	8	3A-6A,12A,13A,12B, 13B	0300-00803-0044
74LS166	10	1C,2C,1D,2D,18E-20E, 18F-20F	0300-00803-0048
74LS174	1	16F	0300-00803-0047
74LS175	2	21A,20B	0300-00803-0035
74S201	6	16A-18A,16B-18B	0300-00803-0056
74LS245	4	6D,7D,12D,17E	0300-00803-0046
74LS273	6	10B,18C,19C,13D, 21D,15F	0300-00803-0038
74LS283	4	7B,8B,14E,14F	0300-00803-0045
R-G-B EPROM KIT	3	17D, 18D,20D	A300-90000-R300
BKG EPROM KIT	2	3C, 3D	A300-90000-R400
16 PIN IC SOCKET	6	16A-18A, 16B-18B	0508-00804-0700
18 PIN IC SOCKET	8	6C,7C,11C,12C, 8D,9D,15D,16D	0300-00804-0900
24 PIN IC SOCKET	5	3C, 3D, 17D, 18D, 20D	0300-00804-1000
10MHZ CRYSTAL	1	XTAL	0300-00804-1100
BUS BAR	2	BB1, BB2	0069-239XX-XBNX
20 PIN CONN., MALE	1	P2	0300-00804-1103
50 PIN CONN., MALE	1	P1	0300-00804-1104

PROJECT ENG: J. SZERSZEN			USED ON BLUEPRINT	REVISIONS
DO NOT SCALE DWG.	HEAT TREAT	SCALE NONE	NO. REQ'D 1 (ONE)	Bally / MIDWAY MFG. CO. FRANKLIN PK ILL.
DIM. TOLERANCES UNLESS SPECIFIED: DRN. SBB; CHD.; DATE 9/2/82	MAT'L.	ASSEMBLY DRWG. BLUEPRINT VIDEO P.C. BOARD A084-91431-D300		PART NO. M051-00300 -D007
CONCENTRICITY T.I.R. .002; FRACTIONAL ±1/64; DECIMAL ±.005; HOLE DIA +.002 -.000	FINISH			

DESIGNATION LIST

DESIGNATION	DESCRIPTION
C1, C2	470 PF AX. CER.
C3-C8	100 PF " "
C9-C50	.01 MF " "
C51-C66	1 MF RD. TANT
C67	.001 MF AX. CER.
C68	33 PF " "
C69	.1 MF " "
C70	15 MF " TANT.
C71	.22 MF " CER.
C72	.1 MF " "
C73	1 MF RD TANT.
C74-C76	1000 MF AX. ELEC.
CP1-CP52	.1 MF AX. CER.
R1-R16	56 OHM 1/4W 5% CRBN
R17-R33	1 K " " " " "
R34, R35	330 " " " " "
R36	1 K " " " " "
R37	82 K " " " " "
R38	22 " " " " "
R39	1 K " " " " "
R40	330 " " " " "
R41, R42	10 K " " " " "
R43-R46	1 K " " " " "
R47	330 " " " " "
R48	2.2 K " " " " "
R49	1 K " " " " "
VR1, VR2	5 K POT
D1	1N 914 B
D2	1N 4004
Q1	2N 4403
Q2	2N 3391 A
Q3	TIP 120
IC 1A-1C	74 LS 138
" 1D	74 LS 367
" 1E	Z80A
" 1G, 1H	74 LS 367
" 1J, 1K	2114
" 1L	74 LS 244
" 1M-1S	EPROM
" 1T-1V	NOT USED
IC 2B	74 LS 32
" 2C	74 LS 04
" 2D	74 LS 138
" 2G	74 LS 175
" 2H	74 LS 00
" 2J, 2K	2114
IC 3C	74 S04
" 3D, 3F	74 LS 74
" 3L, 3N	8910
" 3P	Z80A
" 3S, 3T	2114
" 3U, 3V	EPROM

DESIGNATION	DESCRIPTION
IC 4C	74 LS 161
" 4D	74 LS 00
" 4E	74 LS 08
" 4F	74 LS 02
" 4G	74 LS 139
" 4H	74 LS 138
IC 5C	LM 380
" 5M	74 LS 240
" 5N	74 LS 273
" 5S	74 LS 02
IC 6M	74 LS 240
" 6N	74 LS 244
" 6U	74 LS 74
L1-L4	CHOKE 10 µH MOLDED
L5-L17	CHOKE 10 µH W/W
ICS 1E	40 PIN IC SOCKET
" 1J, 1K	18 PIN " "
" 1M, 1N, 1P, 1R, 1S	24 PIN " "
" 2J, 2K	18 PIN " "
" 3L, 3N, 3P	40 PIN " "
" 3S, 3T	18 PIN " "
" 3U, 3V	24 PIN " "
J1	10 PIN CONN KK-156
J2	20 PIN " " "
J3	7 PIN " " "
J4	50 PIN MALE CONN.
J5	20 PIN " "
JW1, JW3, JW5, JW7	JUMPER WIRES
MH1-MH4	DUAL LKG PC BD SPACE
SW1, SW2	8 POS. DIP S.W.
SW3	P.B. SWITCH
TW1-TW2	TIE WRAPS
XTAL 1	7.0 MHZ CRYSTAL
CABLE ASSY	AS BELOW
CABLE	50 PIN RIBBON CABLE
CABLE	20 PIN " "
BKG	LABEL BACKGROUND
LBLM	LABEL MASTER VOLUME

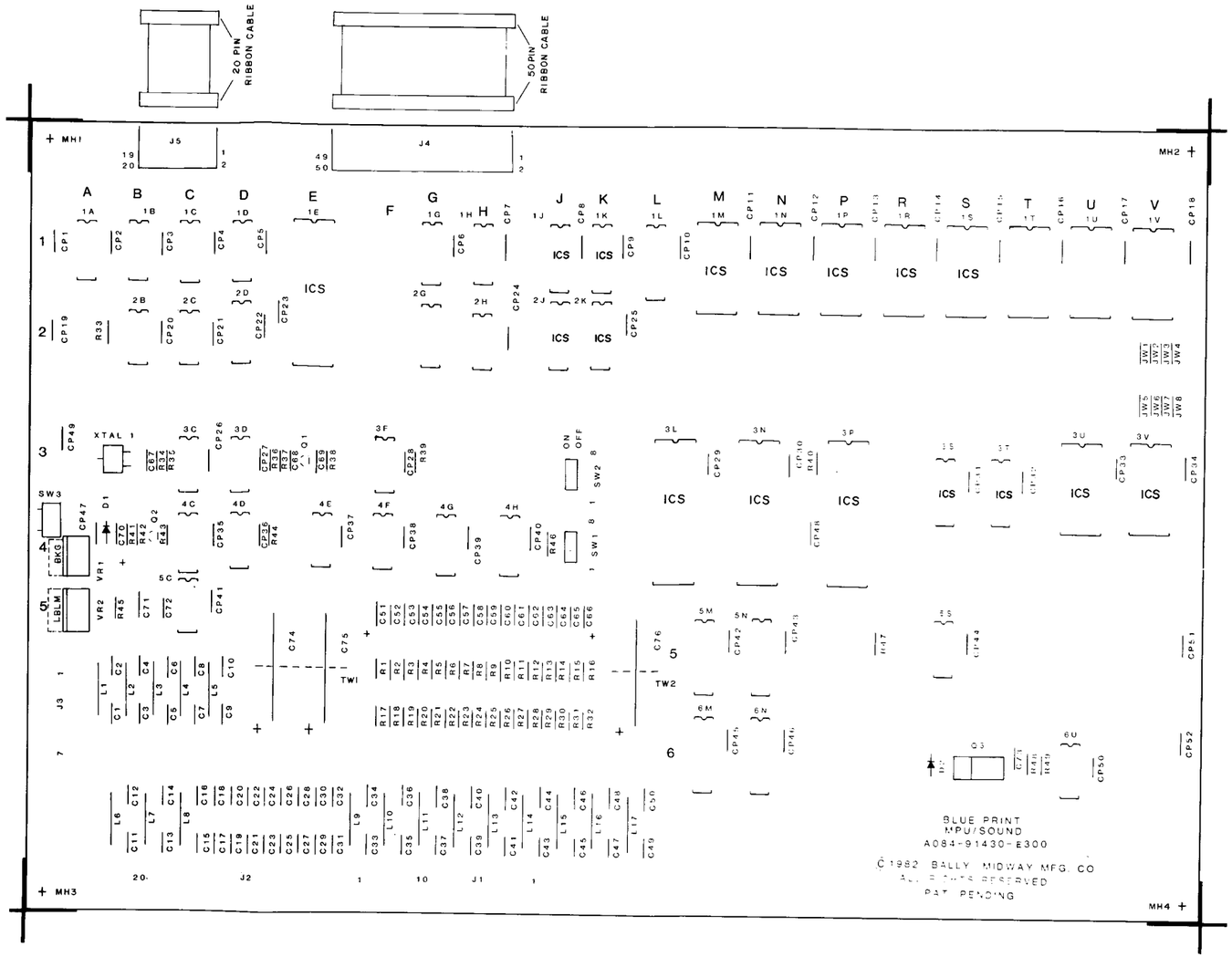

DESCRIPTION	Q'TY	DESI
33 PF AX.CER.	1	C6
100 PF " "	6	C3-
470 PF " "	2	C1,
.001 MF " "	1	C6
.01 MF " "	42	C9-
.1 MF " "	54	C6
		CP
.22 MF AX.CER.	1	C7
1 MF RD TANT.	17	C5
15 MF AX. TANT.	1	C7
1000 MF AX. ELEC.	3	C7
22 OHM 1/4W 5% CRBN	1	R3
56 " " " "	16	R1-
330 " " " "	4	R3
		R4
1 K " " " "	24	R1
		R3
		R4
2.2K " " "	1	R4
10 K " "	2	R4
82 K " " "	1	R3
5 K POT	2	VR
1N914B	1	D1
1N4004	1	D2
2N4403	1	Q1
2N3391A	1	Q2
TIP 120	1	Q3
2114	6	IC 1
		"
74LS00	2	IC 2
74LS02	2	IC 4
74LS04	1	IC 2
74S04	1	IC 3
74LS08	1	IC 4
74LS32	1	IC 2
74LS74	3	IC 3
74LS138	5	IC 1
74LS139	1	IC 4
74LS161	1	IC 4
74LS175	1	IC 2
74LS240	2	IC 5
74LS244	2	IC 1
74LS273	1	IC 5
74LS367	3	IC 1
8910	2	IC 3
LM380	1	IC 5
Z80A	2	IC 1

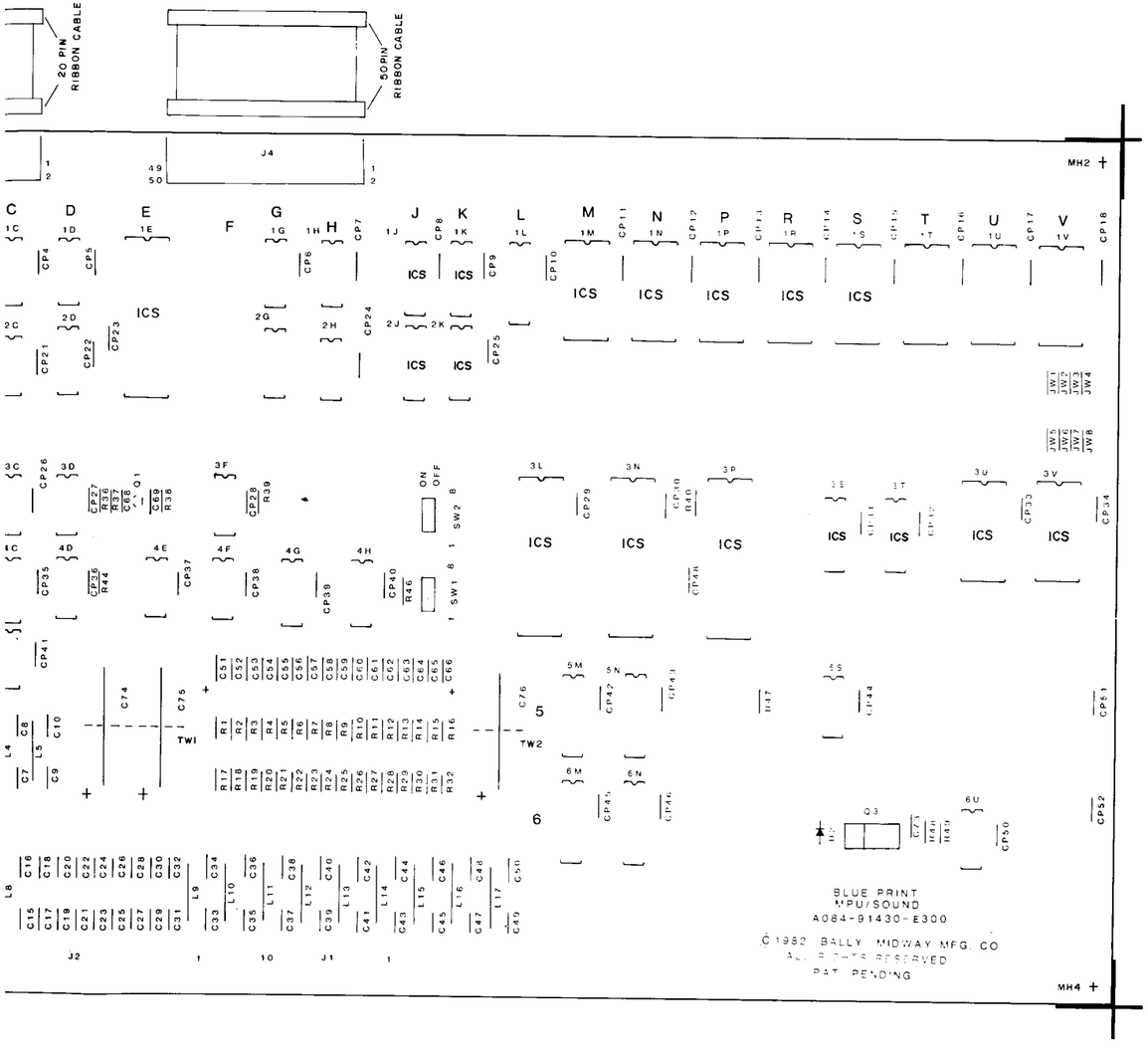

CROSS REFERENCE LIST

DESCRIPTION	Q'TY	DESIGNATION	PART NO.
33 PF AX. CER.	1	C68	0300-00800-1400
100 PF " "	6	C3-C8	0300-00800-0500
470 PF " "	2	C1, C2	0508-00800-1700
.001 MF " "	1	C67	0300-00800-0600
.01 MF " "	42	C9-C50	0300-00800-1300
.1 MF " "	54	C69, C72, CP1-CP52	0300-00800-0700
.22 MF AX. CER.	1	C71	0300-00800-0800
1 MF RD TANT.	17	C51-C66, C73	0300-00800-0900
15 MF AX. TANT.	1	C70	0300-00800-1401
1000 MF AX. ELEC.	3	C74-C76	0300-00800-1200
22 OHM 1/4W 5% CRBN	1	R38	0062-06383-1XXX
56 " " " "	16	R1-R16	0062-09283-1XXX
330 " " " "	4	R34, R35, R40, R47	0062-14483-1XXX
1 K " " "	24	R17-R33, R36, R39, R43-R46, R49	0062-17983-1XXX
2.2K " " "	1	R48	0062-19583-1XXX
10 K "	2	R41, R42	0062-22783-1XXX
82 K " " "	1	R37	0062-27183-1XXX
5 K POT	2	VR1, VR2	0300-00804-0600
1N914B	1	D1	0300-00801-0001
1N4004	1	D2	0300-00801-0002
2N4403	1	Q1	0300-00802-0002
2N3391A	1	Q2	0300-00802-0003
TIP 120	1	Q3	0300-00802-0001
2114	6	IC 1J, 1K, 2J, 2K, 3S, 3T	0300-00803-0041
74LS00	2	IC 2H, 4D	0300-00803-0027
74LS02	2	IC 4F, 5S	0300-00803-0028
74LS04	1	IC 2C	0300-00803-0029
74S04	1	IC 3C	0300-00803-0043
74LS08	1	IC 4E	0300-00803-0030
74LS32	1	IC 2B	0300-00803-0031
74LS74	3	IC 3D, 3F, 6U	0300-00803-0032
74LS138	5	IC 1A, 1B, 1C, 2D, 4H	0300-00803-0033
74LS139	1	IC 4G	0300-00803-0034
74LS161	1	IC 4C	0300-00803-0044
74LS175	1	IC 2G	0300-00803-0035
74LS240	2	IC 5M, 6M	0300-00803-0036
74LS244	2	IC 1L, 6N	0300-00803-0037
74LS273	1	IC 5N	0300-00803-0038
74LS367	3	IC 1D, 1G, 1H	0300-00803-0039
8910	2	IC 3L, 3N	0066-953AX-XXSX
LM380	1	IC 5C	0066-040BX-XXAX
Z80A	2	IC 1E, 3P	0300-00803-0042

DESCRIPTION	Q'TY	DESIGNATION	PART NO.
MPU EPROM KIT	1	1M, 1N, 1P, 1R, 1S	A300-90000-R100
SOUND EPROM KIT	1	3U, 3V	A300-90000-R200
CHOKE 10 UH MOLDED	4	L1-L4	0300-00804-1107
CHOKE 10 UH W/W	13	L5-L17	0300-00804-1108
18 PIN IC SOCKET	6	1J, 1K, 2J, 2K, 3S, 3T	0300-00804-0900
24 PIN " "	7	1M, 1N, 1P, 1R, 1S, 3U, 3V	0300-00804-0000
40 PIN " "	4	1E, 3L, 3N, 3P	0300-00804-1100
7 PIN CONN KK-156	1	J3	3000-16367-0710
10 PIN " " "	1	J1	3000-16367-1011
20 PIN " " "	1	J2	3000-16367-2014
20 PIN MALE CONN.	1	J5	0300-00804-1105
50 PIN " "	1	J4	0300-00804-1104
ZERO OHM 22 AWG BARE	4	JW1, JW3, JW5, JW7	0986-00805-0200
SWITCH 8 POS. DIP	2	SW1, SW2	0300-00804-0700
SWITCH P.B.	1	SW3	0300-00804-0800
7.0 MHZ CRYSTAL	1	XTAL 1	0300-00804-1109
TIE WRAPS	2	TW1, TW2	0017-00042-0048
DUAL LKG PC BD SPACER	4	MH1-MH4	0017-00042-0253
CABLE ASSY			
20 PIN RIBBON CABLE	1		A300-00019-0000
50 PIN " "	1		A300-00020-0000
BACKGROUND VOL. CONTR. LBL	1	BKG	M051-00300-A014
MASTER VOL. CONTR.	1	LBLM	M051-00300-A013
BLUEPRINT MPU/SOUND PC	1		A080-91430-E300

REVISIONS

PROJECT ENG: J. SZERSZEN		USED ON BLUEPRINT	Bally / MIDWAY MFG. CO.
DRAWN TBB	HEAT TREAT	SCALE FULL	NO REQ'D ONE PER
CKD.	MAT'L	ASSEMBLY DWG. BLUEPRINT MPU/SOUND A084-91430-E300	PART NO M051-00300-E005
DATE 08/30/82	FINISH		

DESIGNATION LIST

DESIGNATION	DESCRIPTION
C1	10 mf 16V RD. TANT
C2	0.1mf 50V CR. DSC.
C3	.001mf 100V ESTERF
C4, C5	1mf 35V RD. TANT
C6	.01mf 500V CR. DSC.
C7	4.7 mf 35V RD. TANT
CP1 - CP4	.1mf 50V CR. DSC.
R1, R2	4.7K OHM 1/4W
R3 - R6	1K OHM 1/4W
R7	150 OHM 1/4W
R8, R9	68 OHM 1/4W
R10	270 OHM 1/4W
R11	18K OHM 1/4W
R12	4.7K OHM 1/4W
D1 - D3	IN5817 SCHOTTKY
D4, D5	IN4148 DIODE
U1	7414
U2	7474
U3	74LS193
U4	555 TIMER
J1	CONNECTOR ASSY.
SW1	4 POS DIP SW.
MH1 - MH4	SNAP BUSHINGS, 1/8"

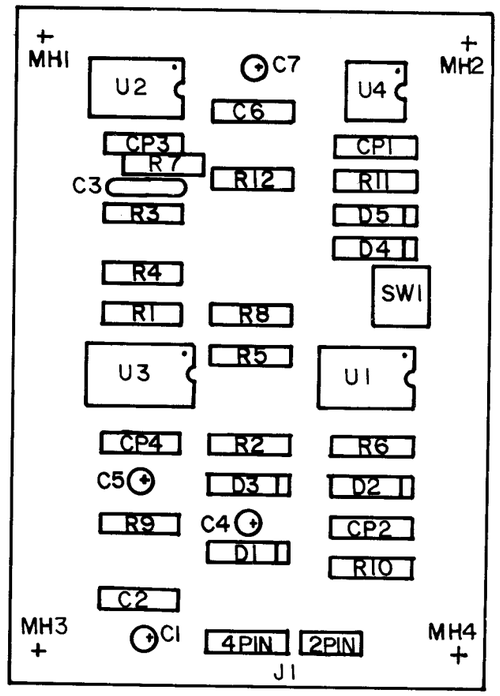

CROSS REFERENCE LIST

DESCRIPTION	QTY.	DESIGNATION	PART NOS.
.001mf 100V ESTERF	1	C3	0932-00820-0303
.01mf 500V CR. DSC	1	C6	0932-00821-0401
.1mf 50V CR. DSC	5	C2, CP1-CP4	0932-00820-0302
1mf 35V RD. TANT	2	C4, C5	0932-00820-0304
4.7mf 35V RD. TANT	1	C7	0932-00820-0305
10mf 16V RD. TANT	1	C1	0932-00820-0306
68 OHM 1/4W	2	R8, R9	0062-098B3-1XXX
150 OHM 1/4W	1	R7	0062-122B3-1XXX
270 OHM 1/4W	1	R10	0062-138B5-1XXX
1K OHM 1/4W	4	R3-R6	0062-179B3-1XXX
4.7K OHM 1/4W	3	R1, R2, R12	0062-211B3-1XXX
18K OHM 1/4W	1	R11	0062-239B3-1XXX
IN4148 DIODE	2	D4, D5	0932-00821-0402
IN5817 SCHOTTKY	1	D1-D3	0932-00809-0000
555 TIMER	1	U4	0932-00819-1801
7414	1	U1	0932-00819-1803
7474	1	U2	0932-00819-1804
74LS193	1	U3	0932-00819-1802
CONNECTOR ASSY.	1	J1	0932-00817-0400
4 POS. DIP SW.	1	SW1	0932-00821-0401
SNAP BUSHINGS, 1/8"	4	MH1-MH4	0017-00042-0014
CREDIT MULTIPLIER P. C. BOARD	1	————	A080-91348-C000

PROJECT ENG: J. SZERSZEN		USED ON PAC MAN	Bally / MIDWAY MFG. CO. FRANKLIN PK. ILL.
DO NOT SCALE DWG.	HEAT TREAT	SCALE NONE	NO. REQ'D 1 (ONE)
DIM. TOLERANCES UNLESS SPECIFIED CONCENTRICITY T.I.R .003 FRACTIONAL ± 1/64 DECIMAL ± .005	DRN. SGL	MAT'L.	ASSEMBLY DRAWING, CREDIT MULTIPLIER P. C. A082-91348-C000
	CKD. 9/20/82	FINISH	PART NO. M051-00932-C027

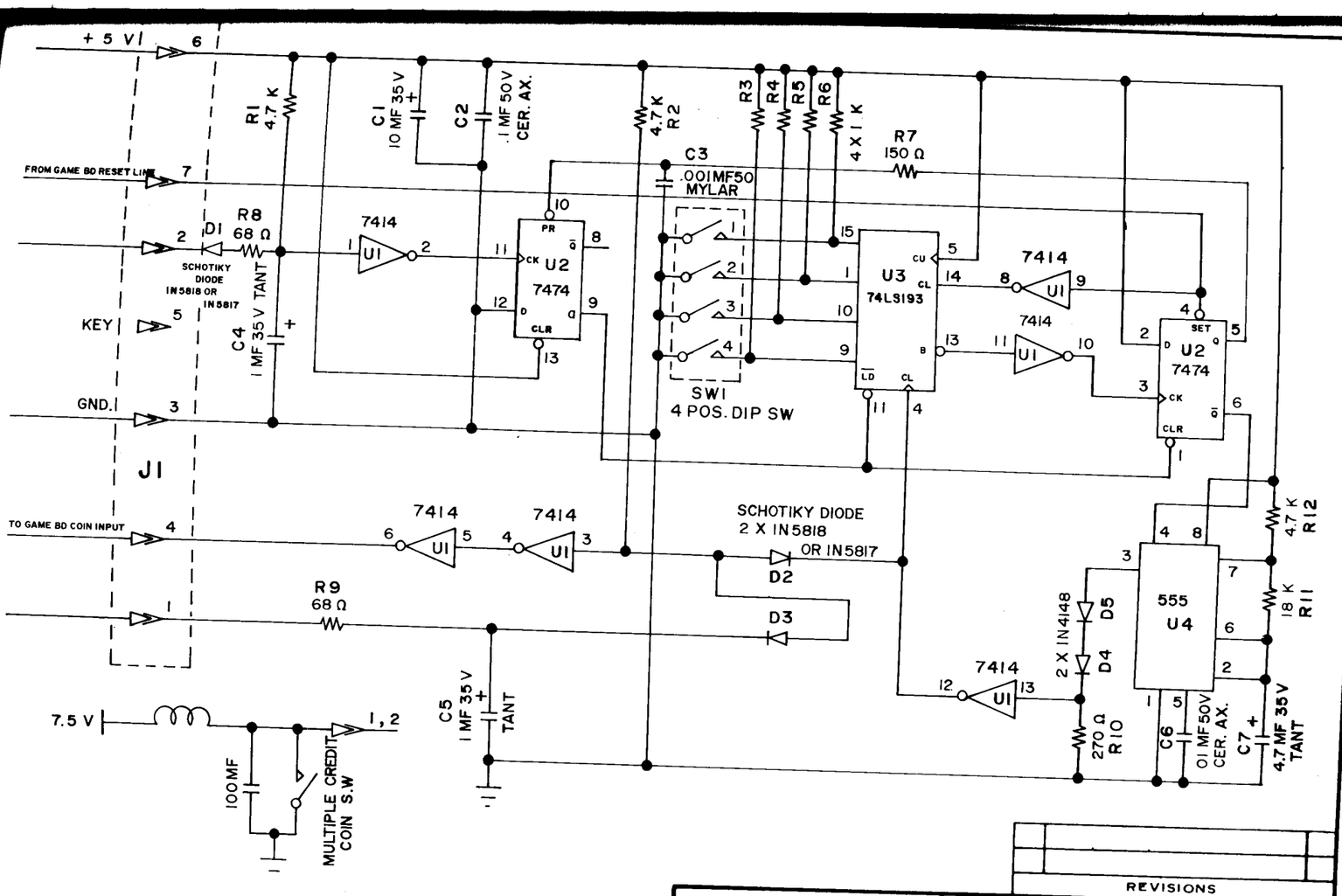

REVISIONS					

DO NOT SCALE DWG.	HEAT TREAT	SCALE FULL	USED ON PAC-MAN	**MIDWAY MFG. CO.** FRANKLIN PK. ILL.	
DIM. TOLERANCES UNLESS SPECIFIED CONCENTRICITY T I R .003 FRACTIONAL ± 1/64 DECIMAL .005 HOLE DIA. + .002 .000	DRN TBB CK'D. DATE 08/17/82	MAT'L FINISH	NO. REQ'D ONE PER	SCHEMATIC DIAGRAM CREDIT MULTIPLIER A082-91348-C000	PART NO. M051-00932-C029

9-11

DESIGNATION LIST

DESIGNATION	DESCRIPTION
J1	7 PIN CONN. KK-156 W/PIN 3 REMOVED
PCHM1, PCMH2	1/8" HEYCO NUT

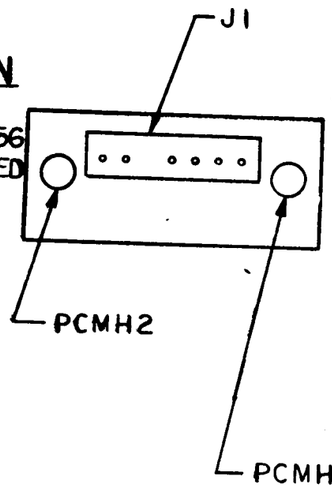

CROSS REFERENCE LIST

DSCRP.	QTY	DESIG.	PART NOS.
7 PIN CONN. KK156 W/ PIN 3 REMOVED	1	J1	0932-00817-0400
1/8" HEYCO NUT	2	PCMH1, PCMH2	0017-00042-0014
PC BD	1	——	A080-91109-A000

PROJ. ENG = J. SZERSZEN

THIS DWG. IS CONFIDENTIAL & PROPERTY OF MIDWAY MFG. CO.

DIM. TOLERANCES	FIRST USED ON PAC-MAN			**MIDWAY MFG. CO.** FRANKLIN PK., IL. 60131 A BALLY CO.	
LESS OTHERWISE SPEC. NCENTRICITY T.I.R. . 002 ACTIONAL ..... ± .1/64 CIMAL ..... ± .005 LE DIA. .... + .002 — .000 GLE ..... ± 1/2° DO NOT SCALE DWG.	DRN TBB	DATE 08/18/82	SCALE FULL	ASSEMBLY DWG CREDIT MULT. BYPASS PC BD A082-91109-A000	REVISIONS PART NO. M-0-5-1-0-0-9-3-2-A-0-2-7
	MECH CHK.	MAT'L.			
	ELEC. CHK.	FINISH			

9-1

* NOTE : ON "A" VERSIONS
ALL EPROMS, 2532, WI
TO ADDRESS LINES (A
PIN-21 TO +5V.

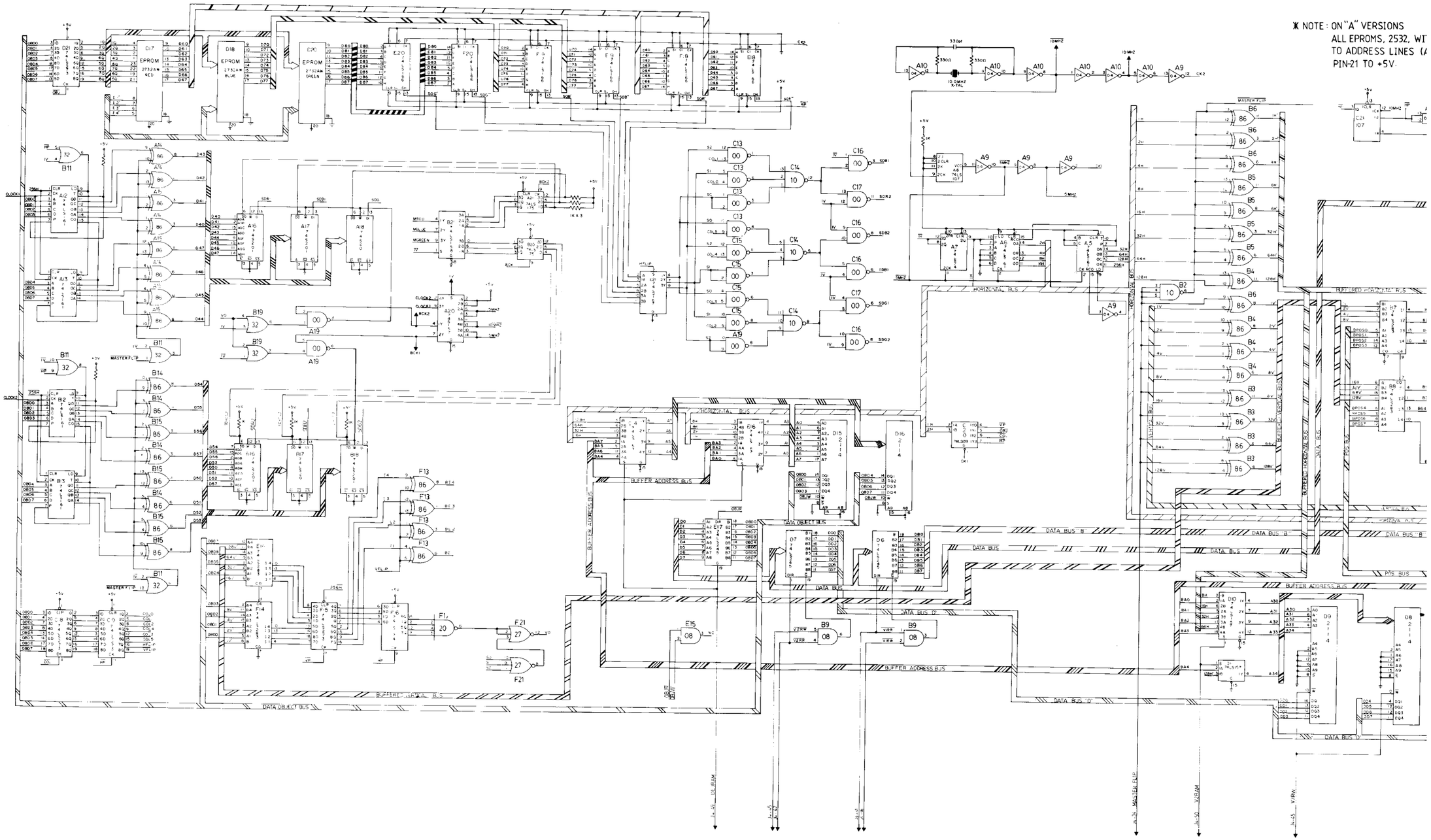

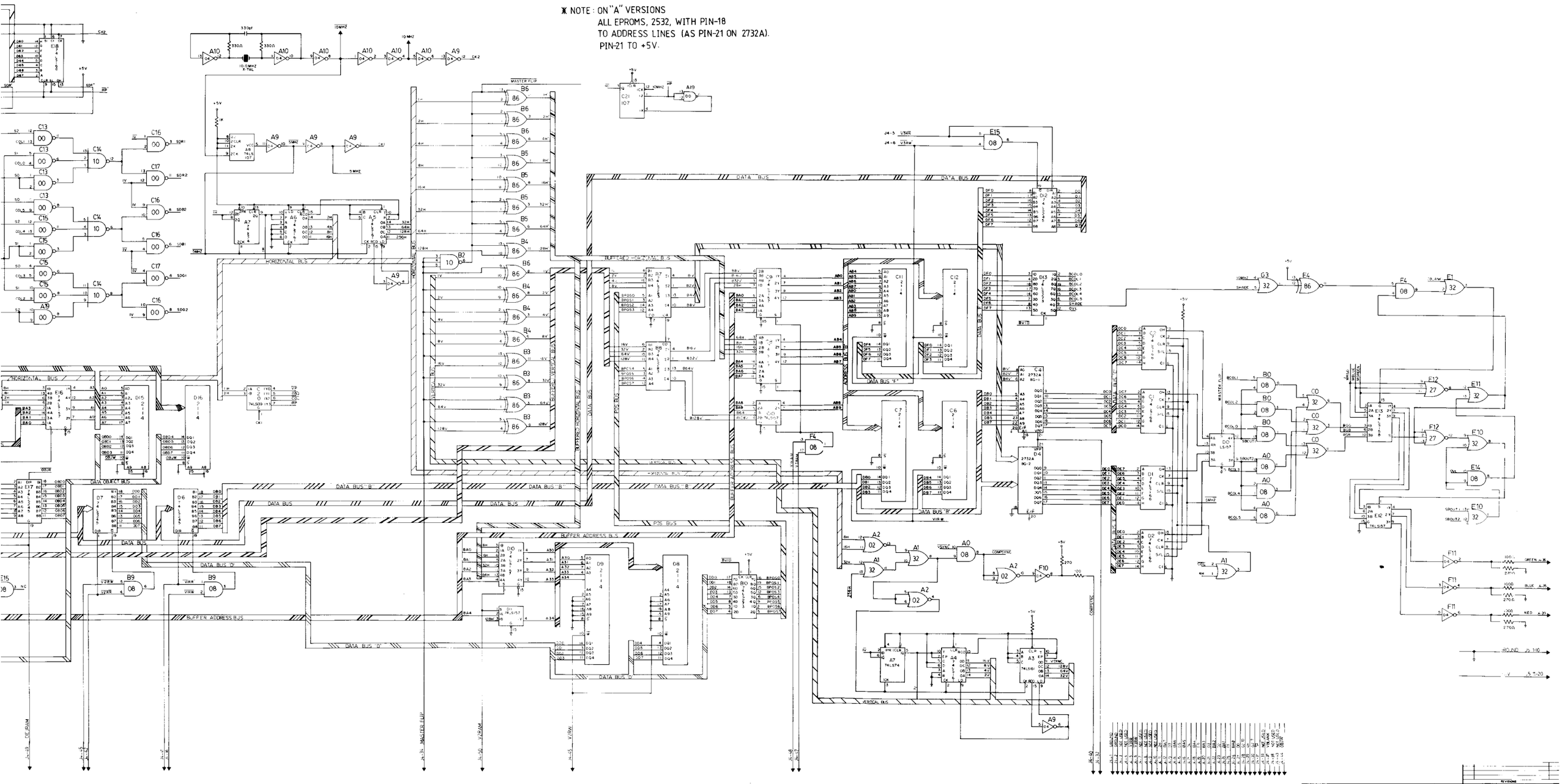

PROJECT ENG J. SZERSZEN		USED ON B. JEPRINT	REVISIONS
	NONE	NO REQ'D 1 (ONE)	MIDWAY MFG. CO.
	SCHEMATIC, VIDEO BOARD A084-91431-D300		PART NO M051-00300-D008
8/20/82			

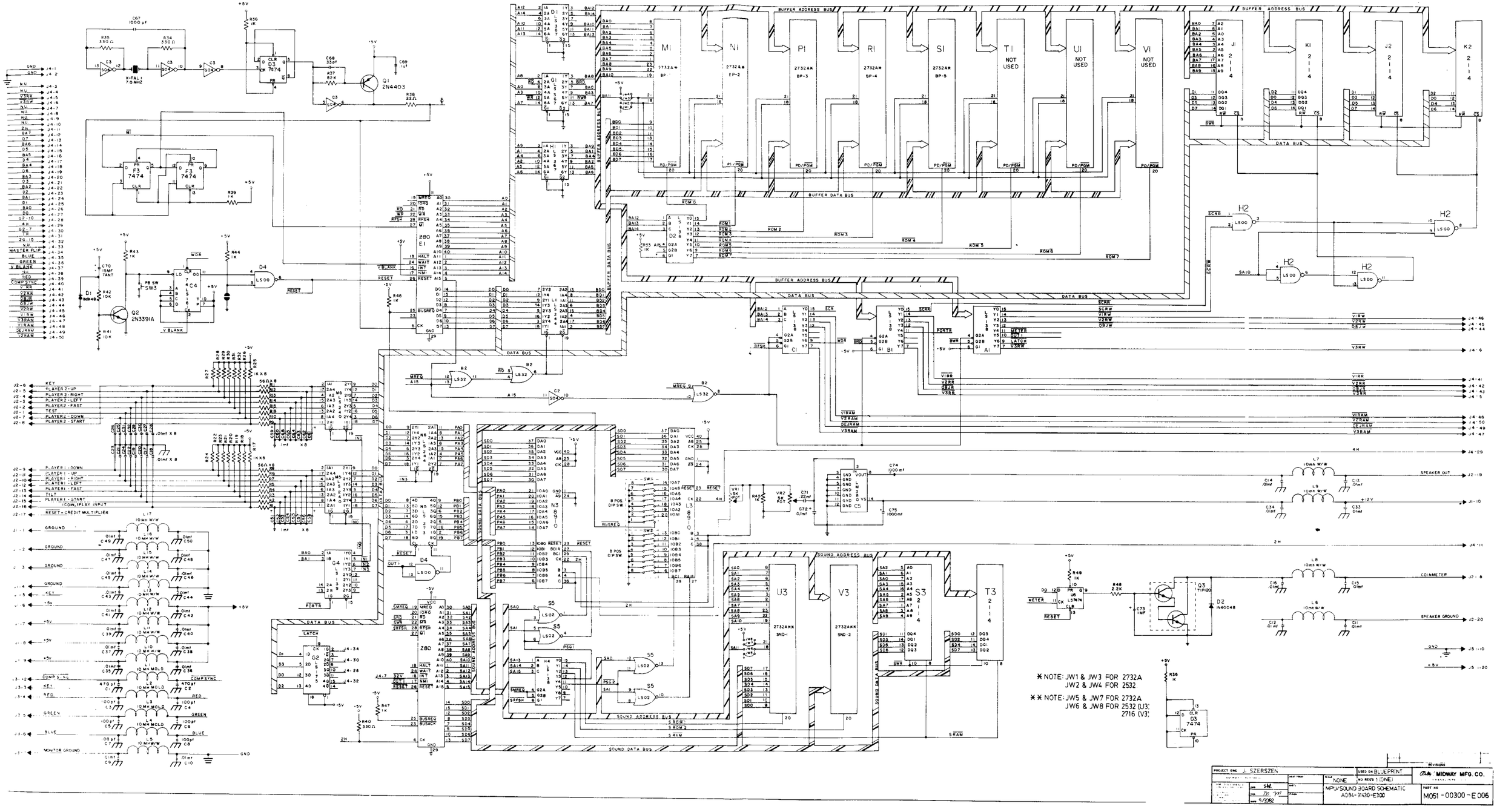

* NOTE: JW1 & JW3 FOR 2732A
JW2 & JW4 FOR 2532

** NOTE: JW5 & JW7 FOR 2732A
JW6 & JW8 FOR 2532 (U3)
2716 (V3)

PROJECT ENG J. SZERSZEN		USED ON BLUEPRINT	MIDWAY MFG. CO.
	NONE	NO REQ'D 1 (ONE)	
	MPU/SOUND BOARD SCHEMATIC A084-91430-E300		PART NO M051-00300-E006
9/3082			