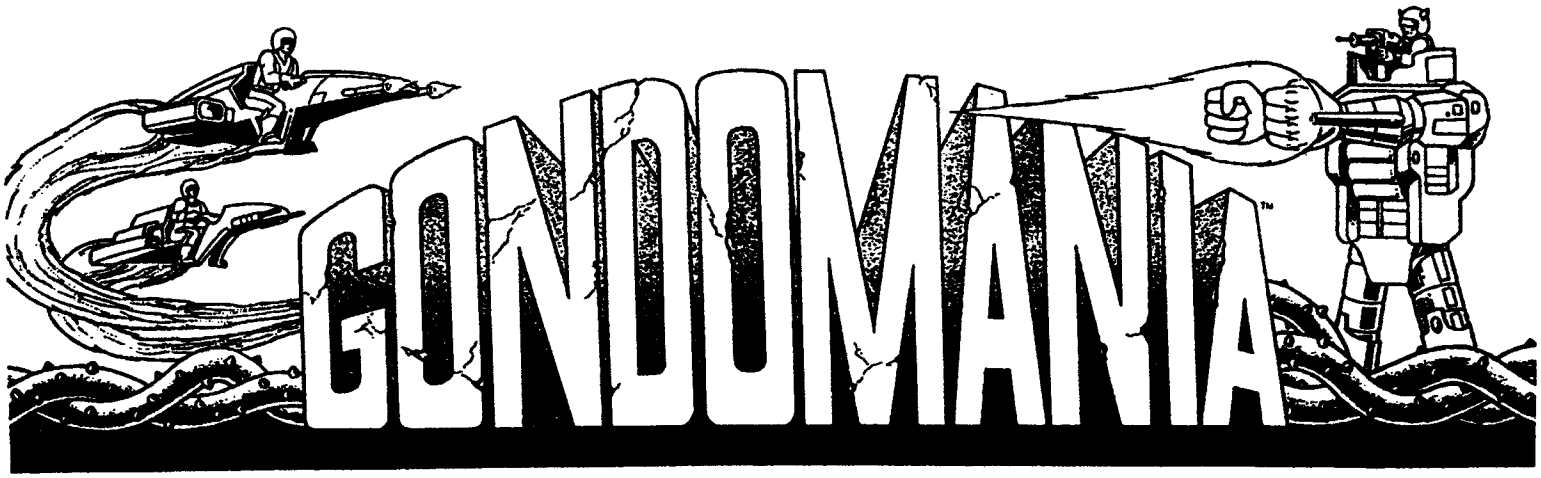

operation & service manual

DATA EAST USA, INC.
470 Needles Drive
San Jose, California 95112

780-0063-00
May, 1987

WARNING

This equipment generates and uses radio frequency energy and if not installed and used properly, i.e., in strict accordance with the instructions manual, may cause harmful interference to radio communications. It has been tested and found to comply with the limits for a Class A computing device persuant to Subpart J of Part 15 of FCC Rules, which are designed to provide reasonable protection against such interference when operated in a commercial environment.

Operation of this equipment in a residential area is likely to cause interference in which case the user at his own expense will be required to take whatever measures may be required to correct the interference.

G O N D O M A N I A

O P E R A T I O N A N D S E R V I C E M A N U A L

TABLE OF CONTENTS.....i

WARNINGS AND DISCLAIMERS.....ii

1. WARRANTY INFORMATION.....1

2. GAME SET PROCEDURES

   A. Inspecting the game.....2

   B. Set up and installation.....2

3. SPECIFIC INFORMATION

   A. Description of controls.....3

   B. Operator selectable options.....4

4. GENERAL INFORMATION

   A. Sound volume control.....5

   B. Power supply information.....5

   C. Monitor adjustment information.....6

5. REPLACEMENT PARTS BREAKDOWN.....8

6. WIRING INFORMATION

   A. Main harness diagram.....9

   B. Joystick rotary control wiring.....10

7. SCHEMATIC DIAGRAM REQUEST FORM.....11

© 1987 DATA EAST USA, INC.

470 Needles Drive
San Jose, Ca. 95112
(408) 286-7074

1ST PRINTING

MAY 1987

WARNINGS AND DISCLAIMERS

FCC WARNING:

This equipment generates and uses radio frequency energy and if not installed and used properly, ie., in strict accordance with the instructions manual, may cause harmful interference to radio communications. It has been tested and found to comply with the limits for a Class A computing device pursuant to Subpart J of Part 15 of FCC Rules, which are designed to provide reasonable protection against such interference when operated in a commercial environment.

Operation of this equipment in a residential area is likely to cause interference in which the user at his own expense will be required to take whatever measures may be required to correct the interference.

FBI WARNING:

Federal law provides severe civil and criminal penalties for the unauthorized reproduction, distribution, or exhibition of copyrighted audiovisual works and video games. The Federal Bureau of Investigation investigates allegations of criminal copyright infringement.

COPYRIGHT NOTICE:

Copyright 1987 by Data East Corporation, all rights reserved.

DISCLAIMER:

Data East USA, Inc., makes no warranty of any kind with regard to the accuracy of this material. Data East shall not be held liable for errors contained herein or for incidental or consequential damages in connection with the performance or use of this material. Data East reserves the right to change this material at any time without prior notice.

REPLACEMENT PARTS AND SERVICE:

To obtain replacement parts or technical assistance, contact the Data East distributor in your area. If you require further technical assistance, contact Data East's Service department between the hours of 8:00 am to 5:00 pm Pacific time at (408) 286-7074.

1. WARRANTY INFORMATION

Data East USA, Inc., ("Seller"), warrants only to the initial purchaser of its products that the items listed below are free from defects in material and workmanship under normal use and service for the warranty period specified:

1.	Printed Circuit Boards (game logic)	(90) days
2.	Monitor pcb and CRT	(30) days
3.	Switching Regulator	(30) days

No other parts of Seller's products are warranted.

Warranty periods are effective from the initial date of shipment from Seller to its authorized distributors.

Seller's sole liability shall be, at its option, to repair or replace products which are returned to Seller during the warranty periods specified, provided:

1. Seller is notified promptly upon discovery by buyer that stated products are defective.

2. Such products are properly packaged and then returned, prepaid to Seller's plant.

This warranty does not apply to any parts damaged during shipping and/or handling, or due to improper installation or usage, or alteration. In no event shall the Seller be liable for any anticipated profits, loss of profits, loss of use, accidental or consequential damages or any other losses incurred by the customer in connection with the purchase of a Data East USA, Inc. product.

WARRANTY DISCLAIMER

EXCEPT AS SPECIFICALLY PROVIDED IN A WRITTEN CONTRACT BETWEEN SELLER AND PURCHASER, THERE ARE NO OTHER WARRANTIES, EXPRESSED OR IMPLIED, INCLUDING ANY IMPLIED WARRANTIES OF MERCHANTABILITY OR FITNESS FOR A PARTICULAR PURPOSE.

2. GAME SET UP PROCEDURES.

A. Inspecting the game.

Gondomania is shipped from the factory in a padded, reinforced cardboard container. Before signing the delivery receipt, inspect the container for signs of abuse or damage. Do not sign the delivery receipt if you suspect that the game may be damaged. Open the container in the presence of the delivery driver, note any damage on the delivery receipt, and have the driver initial it before signing the receipt.

Inspect the exterior of the game for any damage to the cabinet. Open the coin door with the proper key. You will find the keys for the cashbox door and the rear access door hanging inside the coin door.

Remove the rear access door and check the following items:

* Check that all plug-in connectors are all firmly plugged in. Re-plug any connections found to be loose or unplugged.

* Check for secure mounting of the power supply, monitor, and coin door.

* Remove the power cord from inside the cabinet and insert the strain relief plate into the slot at the power cord opening in the cabinet.

→ DO NOT PLUG IN THE POWER CORD AT THIS TIME ←

B. Game installation.

Place the game in its intended location and stabilize it using the adjustable levelers built into the bottom of the cabinet.

Check the Operator Selectable Options information in section 3c of this manual and switch your game to the desired settings. The game is now ready to power up. Plug the game into a 117 VAC grounded outlet and flip the power switch located on the power supply chassis to the ON position. Allow 2 to 3 minutes for the monitor filaments to warm up and check for proper attract mode video. Insert the proper coinage, start the game, check for proper control operation and audio response. Refer to section 3a for descriptions of control operation and game play.

If you detect any problems at this point, remove power to the game and contact your distributor for further instructions.

3. SPECIFIC INFORMATION

A. Description of controls.

The Gondomania game is equipped with two sets of controls, one each for the left (Blue Air Bike) player and another for the right (Grey Air Bike) player. Each set consists of a 8 way joystick with a 12 position rotary control, two types of fire buttons, and two start buttons. See the control panel layout for control placement.

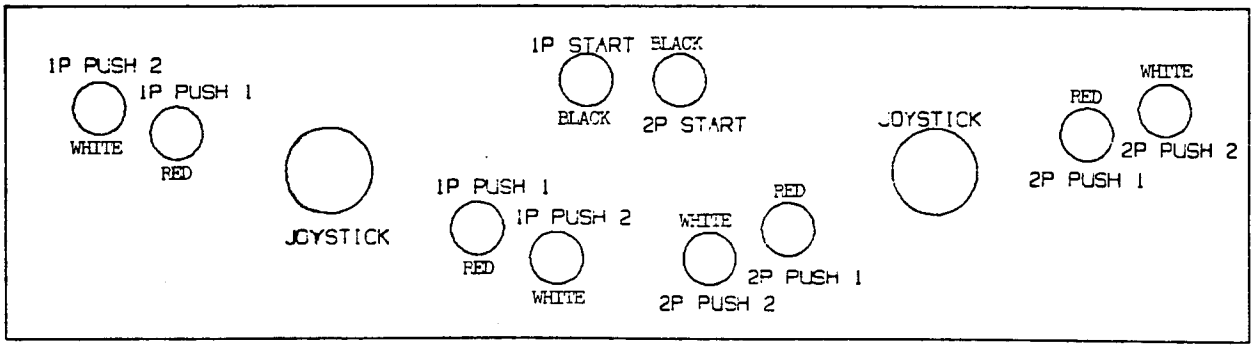

Figure 1

The joystick controls the right, left, up, and down motion of the player image. The 12 position rotary control aims the player image's arm and is used in conjunction with the Push 1 button to fire in the direction the player image's arm is pointing. The Push 2 button causes a shot to be fired in a forward direction only.

The left coin mech credits the Blue Air Bike, and the right coin mech credits the Grey Air Bike. When the proper credits are provided, the left start button is used to begin play for Blue Air Bike, and the right start button will begin play for the Grey Air Bike.

C. Operator selectable options.

The operator selectable options are accessed via two banks of dip-switches located on the DE-0269 pcb. Be certain to remove power to the game when changing the settings of these switches to prevent unwanted electrical shock. Factory settings are noted with an *.

T A B L E 1

DIPSWITCH 1		1	2	3	4	5	6	7	8
PLAYER 2 COIN VS CREDIT	1 COIN = 1 CREDIT:*	OFF	OFF						
	1 COIN = 2 CREDIT:	ON	OFF						
	1 COIN = 3 CREDIT:	OFF	ON						
	2 COIN = 1 CREDIT:	ON	ON						
PLAYER 1 COIN VS CREDIT	1 COIN = 1 CREDIT:*			OFF	OFF				
	1 COIN = 2 CREDIT:			ON	OFF				
	1 COIN = 3 CREDIT:			OFF	ON				
	2 COIN = 1 CREDIT:			ON	ON				
NOT USED						OFF			
ATTRACT MODE SOUND	YES:*						OFF		
	NO:						ON		
FLIP SCREEN	NORMAL:*							OFF	
	FLIP:							ON	
NOT USED									OFF

T A B L E 2

DIPSWITCH 2		1	2	3	4	5	6	7	8
NUMBER OF LIVES	THREE:*	OFF	OFF						
	FIVE:	ON	OFF						
	ONE:	OFF	ON						
	INFINITE:	ON	ON						
GAME DIFFICULTY	NORMAL:*			OFF	OFF				
	EASY:			ON	OFF				
	HARD:			OFF	ON				
	VERY HARD:			ON	ON				
CONTINUATION MODE	NO:					OFF			
	YES:*					ON			
NOT USED							OFF	OFF	OFF

4. GENERAL INFORMATION

A. Sound volume control.

The sound volume level is adjustable by turning the potentiometer VR1 on the main logic pcb. This can be accessed by opening the Coin Mech door and locating the potentiometer near the upper forward corner of the pcb set (See figure 2). Turn the control clockwise to increase the sound volume.

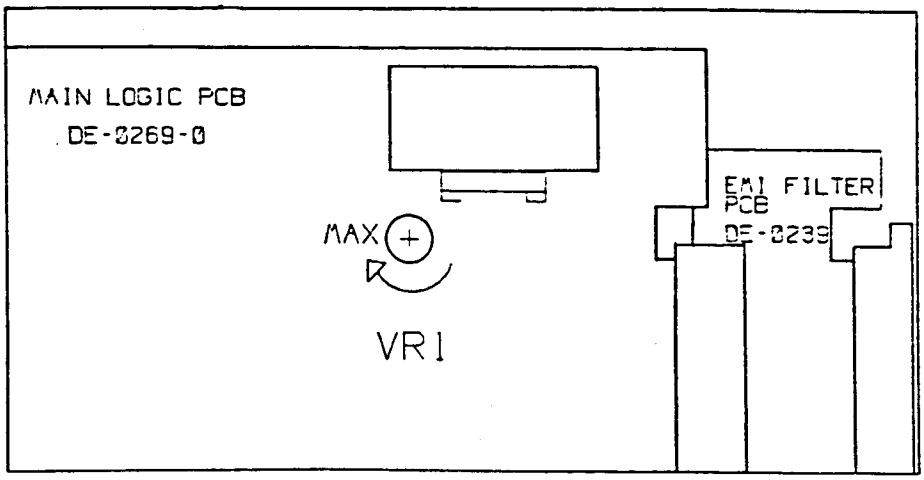

Figure 2

B. Power supply information.

The Power Supply assembly features an ON/OFF switch mounted on the Switch Bracket This switch must be in the OFF position before removing any components of the game or attempting any repairs to prevent unwanted electrical shock. There are also two fuses mounted next to the ON/OFF Switch. They are labeled as to their required ratings. If required, replace these fuses only with FAST BLOW fuses of the same current ratings.

The 3 AMP FAST BLOW fuse is on the 117 VAC Line. In the event that this fuse should blow, this will remove all power to the game. Check all harnessing for proper connections and look for obvious damage to the Monitor, Power Supply, and Logic pcb before replacing the fuse.

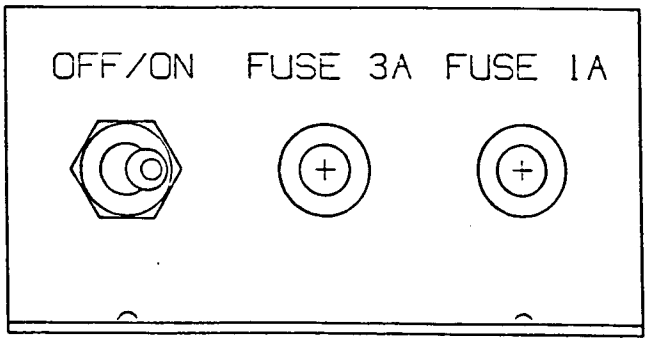

Figure 3

The 1 AMP FAST BLOW fuse is on the +12 VDC line to the Coin Door lamps. In the event that this fuse should blow, the lamps will not illuminate. Check for damaged Coin Door wiring and/or defective Coin Door lamp(s).

The Switching Regulator's DC output level is adjustable by turning the potentiometer VR1. This adjustment should only be made while measuring the +5 volt level with a DIGITAL MULTI-METER at the LOGIC PCB, not at the SWITCHING REGULATOR!

CAUTION: LIFE THREATENING VOLTAGES ARE PRESENT IN AND AROUND THE POWER SUPPLY ASSEMBLY! THIS PROCEDURE SHOULD ONLY BE PERFORMED BY QUALIFIED SERVICE PERSONNEL DUE TO THE EXTREME RISK OF PERSONAL INJURY AND/OR DAMAGE TO THE GAME ELECTRONICS.

C. Monitor adjustment information.

The Data East upright cabinet utilizes a Wells-Gardner 19K7602 RGB monitor display. The monitor adjustments are set at the factory for the optimum display. However, if adjustments are ever required, refer to figure 4 for control placement.

1. BRIGHTNESS CONTROL VR6. Adjust this control so that the illumination is just barely extinquished from portions of the display which should be black.

2. **CONTRAST CONTROL VR7.** Adjust the contrast control for the desired picture intensity.

3. FOCUS CONTROL. Adjust the focus control, located on the high voltage unit T1, for maximum overall definition and fine picture detail.

4. HORIZONTAL HOLD CONTROL VR2. With the monitor being driven with the display signal, connect a jumper between TP1 and TP2 and another jumper between TP3 and TP4. Adjust the horizontal hold control until the picture stops sliding horizontally. Remove the jumpers. Do not use the horizontal hold control for horizontal centering.

5. HORIZONTAL VIDEO SHIFT CONTROL VR1. Use this control to center the picture horizontally.

6. HORIZONTAL RASTER POSITION ADJUSTMENT. If the picture is off center horizontally, some compensation can be made by moving the horizontal raster position either to positions "R" or "L".

7. HORIZONTAL SIZE COIL L1. The horizontal size coil is a hexagonal tuning tool adjustment. This control must be adjusted slowly, if necessary, until the picture or test pattern attains the correct horizontal proportions.

8. **VERTICAL HOLD CONTROL VR5.** Adjust this control until the picture stops rolling and it locks in vertically.

9. **50-60 Hz CONTROL VR9.** This control is used to limit the range of vertical size. This control is preset at the factory and should not require readjustment unless the vertical size or vertical hold controls are readjusted from their original factory settings. In order to set this control, first adjust the vertical size control so that the vertical size is slightly larger than desired. Turn VR9 so that any vertical fold-over which may be present will disappear.

10. **VERTICAL SIZE CONTROL.** This control must be adjusted slowly, if necessary, until the picture or test pattern attains the desired vertical proportions.

11. **VERTICAL RASTER POSITION CONTROL VR3.** If the video is off center vertically, some compensation can be made by turning the vertical position raster control.

12. **CUT OFF AND DRIVE CONTROLS ON NECK BOARD VR201-VR206.** These controls have been preset at the proper grey scale, adjustment of these controls should be avoided.

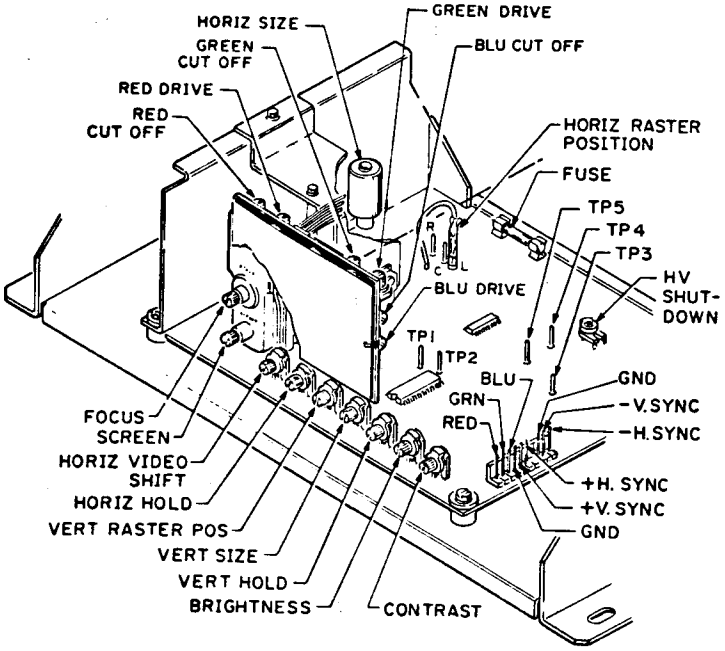

Figure 4

4. REPLACEMENT PARTS BREAKDOWN

The following section lists the replacement parts available for the Gondomania upright game. You should include the Data East Part Numbers when ordering replacement parts from your distributor to help in expediting your orders promptly and accurately.

FINAL ASSEMBLY, GONDOMANIA U/R	500-0021-00
CABINET ASSEMBLY, 1US25-STYLE	365-0010-00
CONTROL PANEL ASSEMBLY	510-0111-00
COIN DOOR ASSEMBLY	515-0004-00
MONITOR ASSEMBLY, UNIVERSAL MOUNT	510-0065-00
POWER SUPPLY ASSEMBLY, 7A.	510-0002-00
PCB SET, GONDOMANIA	510-0112-00
PCB ASSY, EMI FILTER, DE-0239	520-0083-00
MAIN HARNESS, STD 2P	036-0117-01
DUAL LAMPHOLDER ASSEMBLY	170-0002-00
LAMP, INCANDESCENT, 40W	165-0004-01
PLEX RETAINER, MARQUEE	535-0009-00
PLEX, MARQUEE, GONDOMANIA	830-0031-00
PLEX, MONITOR, CLEAR, 23.75 X 23.75	660-0001-01
UNDERLAY CARD, GONDOMANIA	810-0025-00
LABEL, INSRUCTION, GONDMOMANIA	406-0064-00
SIDE DECAL, DE GEN. 5-13-87	830-0040-00
SPEAKER, 4" RND.	031-0004-00

CONTROL PANEL ASSEMBLY, GONDOMANIA	510-0111-00
CONTROL PANEL, BARE	535-0061-00
CONTROL PANEL OVERLAY, GONDOMANIA	800-0027-00
JOYSTICK, 8 WAY, ROTARY	450-0012-00
PUSHBUTTON ASSY, RED	350-0001-02
PUSHBUTTON ASSY, WHITE	350-0001-09
PUSHBUTTON ASSY, BLACK	350-0001-00
BUTTON HOLDER W/SWITCH	185-0001-00
PAL NUT	240-0001-00
KNOB, JOYSTICK, ROTARY	455-0047-00
SCREW, HEX, FOR JOYSTICK KNOB	235-0001-10

POWER SUPPLY ASSEMBLY, 7A.	510-0002-00
SWITCHING REGULATOR, 7A	001-0001-00
ISOLATION TRANSFORMER	010-0001-00
HARNESS, DC OUT, 7A	036-0031-02
NOISE FILTER	150-0004-00
POWER CORD	515-0002-00
SWITCH BRACKET ASSY.	515-0004-00

5. WIRING DIAGRAM

A. Main Harness diagram.

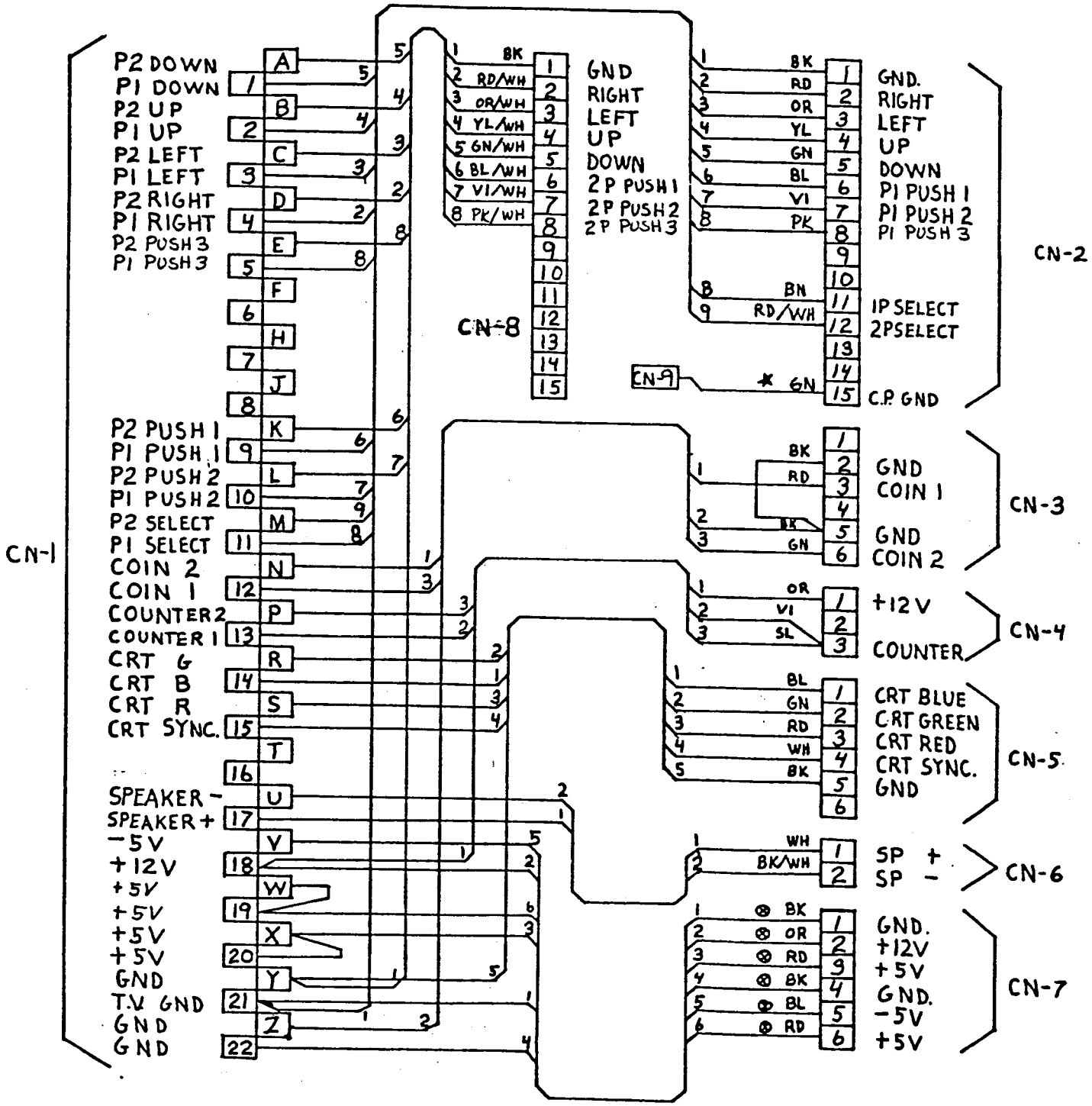

B. Joystick rotary control wiring.

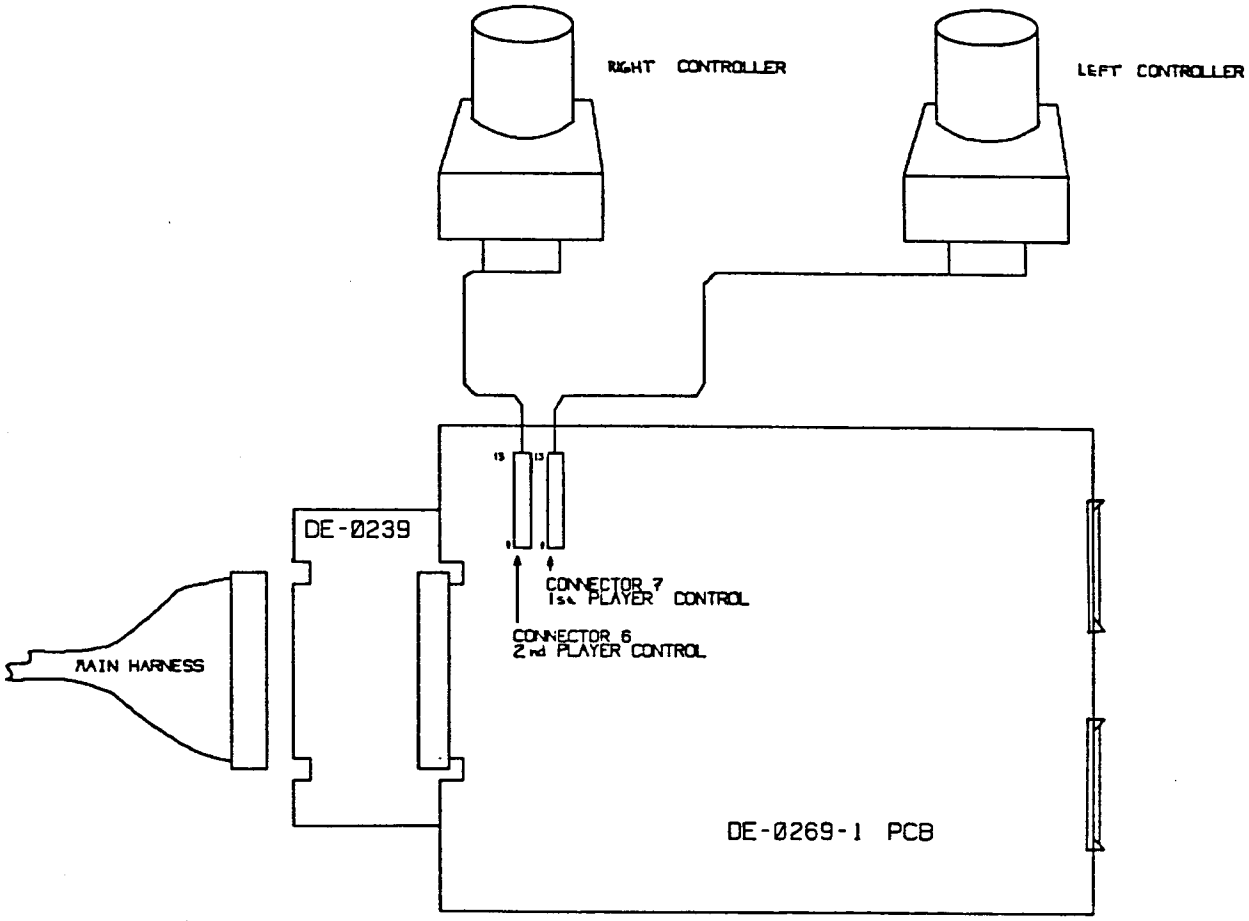

CN 6

PIN	SIGNAL
1	GROUND
2	2P SW1
3	2P SW2
4	2P SW3
5	2P SW4
6	2P SW5
7	2P SW6
8	2P SW7
9	2P SW8
10	2P SW9
11	2P SW10
12	2P SW11
13	2P SW12

CN 7

PIN	SIGNAL
1	GROUND
2	1P SW1
3	1P SW2
4	1P SW3
5	1P SW4
6	1P SW5
7	1P SW6
8	1P SW7
9	1P SW8
10	1P SW9
11	1P SW10
12	1P SW11
13	1P SW12

7. SCHEMATIC DIAGRAM REQUEST FORM

Technical Support Manuals with schematic diagrams are available by US Mail at no charge to owners of the Gondomania game. The Technical Support Manual contains schematic diagrams, pcb layout drawings, and parts lists for the Gondomania pcb set. To obtain your copy, fill out the information card below and mail to:

Data East USA, Inc.
470 Needles Dr.
San Jose, CA. 95112

Attn: Customer Service Dept.

NOTE: Please include the game serial number. No manuals will be mailed without this information. If you would like your company to be added to our mailing list to receive the latest Service Bulletins, check the appropriate box below.

Also, if you have suggestions or comments regarding Data East's product, manuals, or other subjects, please feel free to include them in the comments section below. We count on your feedback to help us serve you better!

GONDOMANIA

TECHNICAL SUPPORT MANUAL REQUEST FORM

CUSTOMER NAME:_____ TITLE:_____

COMPANY NAME:_____

STREET ADDRESS:_____

CITY:_____ STATE:_____ ZIP:_____

TELEPHONE NUMBER:___(_____)_____

GAME SERIAL NUMBER:_____ DATE:_____

YES! PLEASE ADD MY FIRM TO THE DATA EAST MAILING LIST.

NO! DO NOT ADD MY FIRM TO THE DATA EAST MAILING LIST.

COMMENTS:_____

_____

_____

WARNING

Federal law provides severe civil and criminal penalties for the unauthorized reproduction, distribution, or exhibition of copyrighted audiovisual works and video games.

The Federal Bureau of Investigation investigates allegations of criminal copyright infringement.

GONDOMANIA

TECHNICAL SUPPORT MANUAL

© 1987 Data East USA, Inc.
470 Needles Drive
San Jose, CA. 95112

P.N. 780-0065-00
June 15, 1987

WARNING

This equipment generates and uses radio frequency energy and if not installed and used properly, i.e., in strict accordance with the instructions manual, may cause harmful interference to radio communications. It has been tested and found to comply with the limits for a Class A computing device persuant to Subpart J of Part 15 of FCC Rules, which are designed to provide reasonable protection against such interference when operated in a commercial environment.

Operation of this equipment in a residential area is likely to cause interference in which case the user at his own expense will be required to take whatever measures may be required to correct the interference.

TECHNICAL SUPPORT MANUAL

FOR

GONDOMANIA

TABLE OF CONTENTS

1. **GENERAL INFORMATION**
   a. Game Play & Player Control Description.....1
   b. Operator Selectable Options.....2

2. **COMPONENT LIST**
   a. DE-0269 PCB.....3
   b. DE-0259 PCB.....4
   c. Eprom Checksums.....5

4. **PCB LAYOUT DIAGRAMS**
   a. DE-0269 PCB.....7
   b. DE-0259 PCB.....8
   c. Wells-Gardner K7000 Monitor Chassis.....9

5. **SCHEMATIC DIAGRAMS**.....10

6. **WIRING DIAGRAMS**.....49

PREFACE

This manual is intended to be used by service technicians to aid in the diagnosis and repair of the Gondomania game. The manual presents game play, player control operation, operator selectable options, component lists, schematics, and more.

All programmed devices are listed with their checksums, to simplify verification of a device with a Eprom duplicator. See page Chapter 2c for additional information on using this data.

If you have any questions or suggestions regarding this publication, or if you require assistance with a Data East game, please call our Technical Service department at (408) 286-7074, Monday thru Friday, 8:00 am to 5:00 pm Pacific time. You may mail your comments to:

Data East USA, Inc.
470 Needles Inc.
San Jose, CA. 95112
Attn: Technical Service

1. GENERAL INFORMATION

a. Game Play & Player Control Description.

The Gondomania game is equipped with two sets of controls, one each for the left (Blue Air Bike) player and another for the right (Grey Air Bike) player. Each set consists of a 8 way joystick with a 12 position rotary control, two types of fire buttons, and two start buttons. See the control panel layout for control placement.

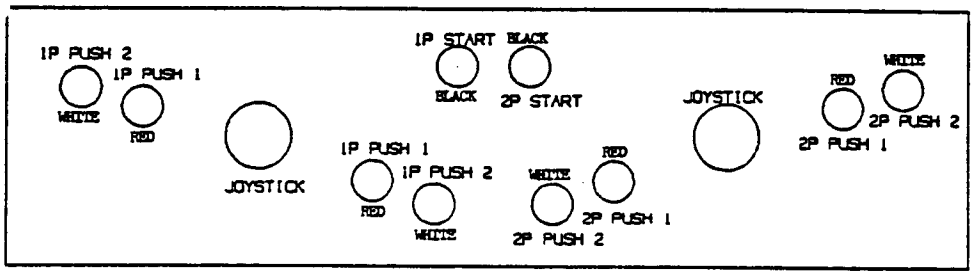

Figure 1

The joystick controls the right, left, up, and down motion of the player image. The 12 position rotary control aims the player image's arm and is used in conjunction with the Push 1 button to fire in the direction the player image's arm is pointing. This weapon has unlimited firepower. The Push 2 button causes a limited (50 shots) amount of firepower to be fired in a forward direction only.

You can pick up additional firepower as the game progresses. Additioanl firepower and optional equipment can be purchased by collecting money received for destroying enemy targets, and flying over the object you desire. The cost of the object will be deducted from your accumulated money. If the object's cost is greater than the total money you have accumulated, you will not pick up the object or gain additional firepower.

The left coin mechanism credits the Blue Air Bike, and the right coin mechanism credits the Grey Air Bike. When the proper credits are provided, the left start button is used to begin play for Blue Air Bike, and the right start button will begin play for the Grey Air Bike.

b. Operator Selectable Options.

The operator selectable options are accessed via two banks of dip-switches located on the DE-0269 pcb. Be certain to remove power to the game when changing the settings of these switches to prevent unwanted electrical shock. Factory settings are noted with an *.

T A B L E 1 .

DIPSWITCH 1		1	2	3	4	5	6	7	8
PLAYER 2 COIN VS CREDIT	1 COIN = 1 CREDIT:*	OFF	OFF						
	1 COIN = 2 CREDIT:	ON	OFF						
	1 COIN = 3 CREDIT:	OFF	ON						
	2 COIN = 1 CREDIT:	ON	ON						
PLAYER 1 COIN VS CREDIT	1 COIN = 1 CREDIT:*			OFF	OFF				
	1 COIN = 2 CREDIT:			ON	OFF				
	1 COIN = 3 CREDIT:			OFF	ON				
	2 COIN = 1 CREDIT:			ON	ON				
NOT USED						OFF			
ATTRACT MODE SOUND	YES:*						OFF		
	NO:						ON		
FLIP SCREEN	NORMAL:*							OFF	
	FLIP:							ON	
NOT USED									OFF

T A B L E 2

DIPSWITCH 2		1	2	3	4	5	6	7	8
NUMBER OF LIVES	THREE:*	OFF	OFF						
	FIVE:	ON	OFF						
	ONE:	OFF	ON						
	INFINITE:	ON	ON						
GAME DIFFICULTY	NORMAL:*			OFF	OFF				
	EASY:			ON	OFF				
	HARD:			OFF	ON				
	VERY HARD:			ON	ON				
CONTINUATION MODE	NO:					OFF			
	YES:*					ON			
NOT USED							OFF	OFF	OFF

2. COMPONENT LIST

a. DE-0269 PCB

TYPE	DEVICE ID	PART NUMBER	PCB LOCATION
TTL	74LS00	100-0025-00	2E
TTL	74LS02	100-0026-00	6D
TTL	74LS04	100-0027-00	9E,7E,8E
TTL	74LS08	100-0028-00	9D
TTL	74LS10	100-0029-00	15E
TTL	74LS27	100-0032-00	10A
TTL	74LS32	100-0034-00	4D,5E,6E
TTL	74LS74	100-0037-00	11D,1E,3E
TTL	74LS86	100-0039-00	10D,14E
TTL	74LS138	100-0042-00	15D
TTL	74LS139	100-0043-00	2D
TTL	74LS153	100-0045-00	6A,7A,8A,9A,7B
TTL	74LS157	100-0046-00	14 EA. (see pcb layout)
TTL	74LS174	100-0051-00	10C,16C,18C,8D,10E,12E
TTL	74LS194	100-0055-00	3A,6K
TTL	74LS244	100-0057-00	3B,1D
TTL	74LS245	100-0058-00	5C,7C,8C,9C,13C,15C,6J
TTL	74LS257	100-0171-00	8J,9J,10J,12J,13J,15J,16J
TTL	74LS273	100-0022-00	13 EA (see pcb layout)
TTL	74LS283	100-0061-00	11A,13A,14A,10B
TTL	74LS299	100-0220-00	11D,17E,18E,10F,11F,15F,16F
TTL	74LS367	100-0062-00	4E
TTL	74LS374	100-0064-00	1C,2C,3C,4C,6C
CPU	6502A	100-0094-01	5J
CPU	6809E	100-0189-01	1F
CPU	8751H	960-0008-04	1B
RAM	TMM2015-15	105-0083-00	6H
RAM	TMM2018-15	105-0035-00	5B,8B,9B,13E
RAM	HM6264-10	105-0051-02	16B
OPN	YM2203	100-0123-00	3F
DAC	YM3014	100-0179-00	1H,2H
OPL	YM3526	100-0208-00	3H
OP AMP	MPC3403	100-0124-00	1J
PWR AMP	MB3730	100-0081-00	1K
HYBRID	RCDM-I1	100-0185-00	RA4,RA5,RA6-RA13,RA20,RA21
HYBRID	RM-C3	120-0066-00	RA1,RA2
XTAL	8 MHZ	140-0007-00	X1
XISTOR	2SD880	110-0044-00	Q1
RESNET	1K X 8	120-0039-20	RA3
RESNET	3.3K X 8	120-0037-26	RA16,RA17
RESNET	10K X 8	120-0039-32	RA22

b. DE-0259 PCB

TYPE	DEVICE ID	PART NUMBER	PCB LOCATION
TTL	74LS00	100-0025-00	2B,1D,16E,7K
TTL	74LS02	100-0026-00	2A
TTL	7404	100-0007-00	17A
TTL	74LS04	100-0027-00	1C,13C,14C,16C,9E,3L
TTL	74LS08	100-0028-00	3D,12C,15D,10E,9M
TTL	74LS10	100-0029-00	7B
TTL	74LS14	100-0030-00	14A
TTL	74LS20	100-0031-00	7E,9L
TTL	74LS30	100-0033-00	2D,8E
TTL	74LS32	100-0034-00	12E,10K
TTL	74LS74	100-0037-00	11 EA (see pcb layout)
TTL	74LS86	100-0039-00	13A,13B,9C,14D
TTL	74LS138	100-0042-00	12B
TTL	74LS157	100-0046-00	12 EA (see pcb layout)
TTL	74LS158	100-0047-00	6F,7F,8H,8J,14H,14J,
TTL	74LS163	100-0049-00	7A,10A,11A,1D,2E
TTL	74LS174	100-0051-00	15C,3K,1L
TTL	74LS175	100-0052-00	10D,10M
TTL	74LS194	100-0055-00	17C,18C,17D,18D,11D
TTL	74LS244	100-0057-00	14B,7J,13J
TTL	74LS245	100-0058-00	4A,5A,17B,18B,15,16,17,18K
TTL	74LS257	100-0170-00	7J,12J,15J,18J
TTL	74LS273	100-0022-00	2J,6K,8M
TTL	74LS283	100-0061-00	7A,8A,7D,8D
TTL	74LS373	100-0111-00	10J,11J,16J,17J
TTL	74LS374	100-0064-00	26 EA (see pcb layout)
TTL	74LS375	100-0173-00	13D,16D,8L,10L
TTL	74LS669	100-0191-00	7C,8C
CUSTOM IC	HMC-20	100-0159-00	16A
CUSTOM IC	VSC-30	100-0160-00	11B
CUSTOM IC	DRL-40	100-0221-00	6M,12M
RAM	TMM2018-55	105-0035-00	10 EA (see pcb layout)
LINEAR	PST-518	110-0065-00	PST518
XTAL	12 MHZ	140-0005-00	XTAL

c. Eprom Checksums.

This section lists the program devices (Eproms) used on the Gondomania pcb set. In addition, we have included the checksum of each device to allow verification of suspect devices with the aid of an Eprom duplicating machine. The checksum is a sum of all the programmed bytes in an Eprom and is unique to each individual program device. These checksums were generated using a Data I/O System 29B.

If you suspect a program device has failed, load its program into the duplicating equipment. Compare the checksum displayed with the data on the following list and verify that they match. In the event that your checksum does not match, check one or two other Eproms in the same manner to be certain that your duplicating equipment computes checksums in the same fashion.

DE-0269 PCB

LABEL	DEVICE	SUM	FUNCTION	PART NUMBER
DT-00	27256	E9F2	CPU PROGRAM	960-0008-00
DT-01	27512	068E	CPU PROGRAM	960-0008-01
DT-02	27512	62AA	CPU PROGRAM	960-0008-02
DT-03	27512	2424	CPU PROGRAM	960-0008-03
DT-04	8751H	N/A	SECURITY CHIP	960-0008-04
DT-05	27256	9EF5	AUDIO PROGRAM	960-0008-05
DT-06	27512	2C79	BACKGROUND GRAPHICS	960-0008-06
DT-07	27256	E196	BACKGROUND GRAPHICS	960-0008-07
DT-08	27512	ED13	BACKGROUND GRAPHICS	960-0008-08
DT-09	27256	DFB8	BACKGROUND GRAPHICS	960-0008-09
DT-10	27512	265C	BACKGROUND GRAPHICS	960-0008-10
DT-11	27256	1835	BACKGROUND GRAPHICS	960-0008-11
DT-12	27512	6F21	BACKGROUND GRAPHICS	960-0008-12
DT-13	27256	75D0	BACKGROUND GRAPHICS	960-0008-13
DT-14	27256	07C6	FOREGROUND COLOR	960-0008-14

DE-0259 PCB

DT-15	27512	8A9F	MOVING OBJECT GRAPHICS	960-0008-15
DT-16	27512	E8D8	MOVING OBJECT GRAPHICS	960-0008-16
DT-17	27256	5F4A	MOVING OBJECT GRAPHICS	960-0008-17
DT-18	27256	F699	MOVING OBJECT GRAPHICS	960-0008-18
DT-19	27512	97F8	MOVING OBJECT GRAPHICS	960-0008-19
DT-20	27256	7402	MOVING OBJECT GRAPHICS	960-0008-20
DT-21	27512	7CE9	MOVING OBJECT GRAPHICS	960-0008-21
DT-22	27256	EFD6	MOVING OBJECT GRAPHICS	960-0008-22

4. PCB LAYOUT DIAGRAMS

a. DE-0269 PCB

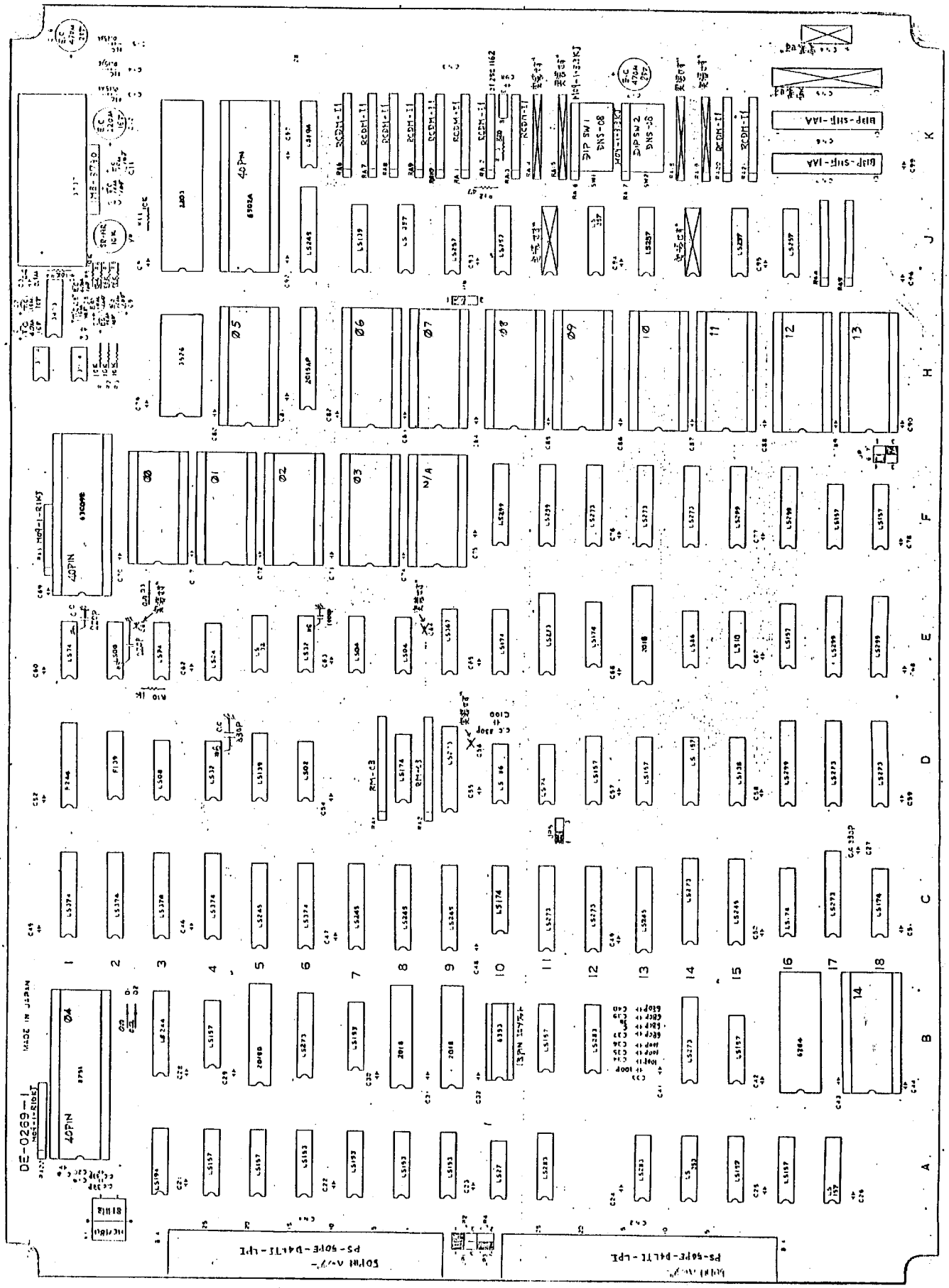

b. DE-0259 PCB

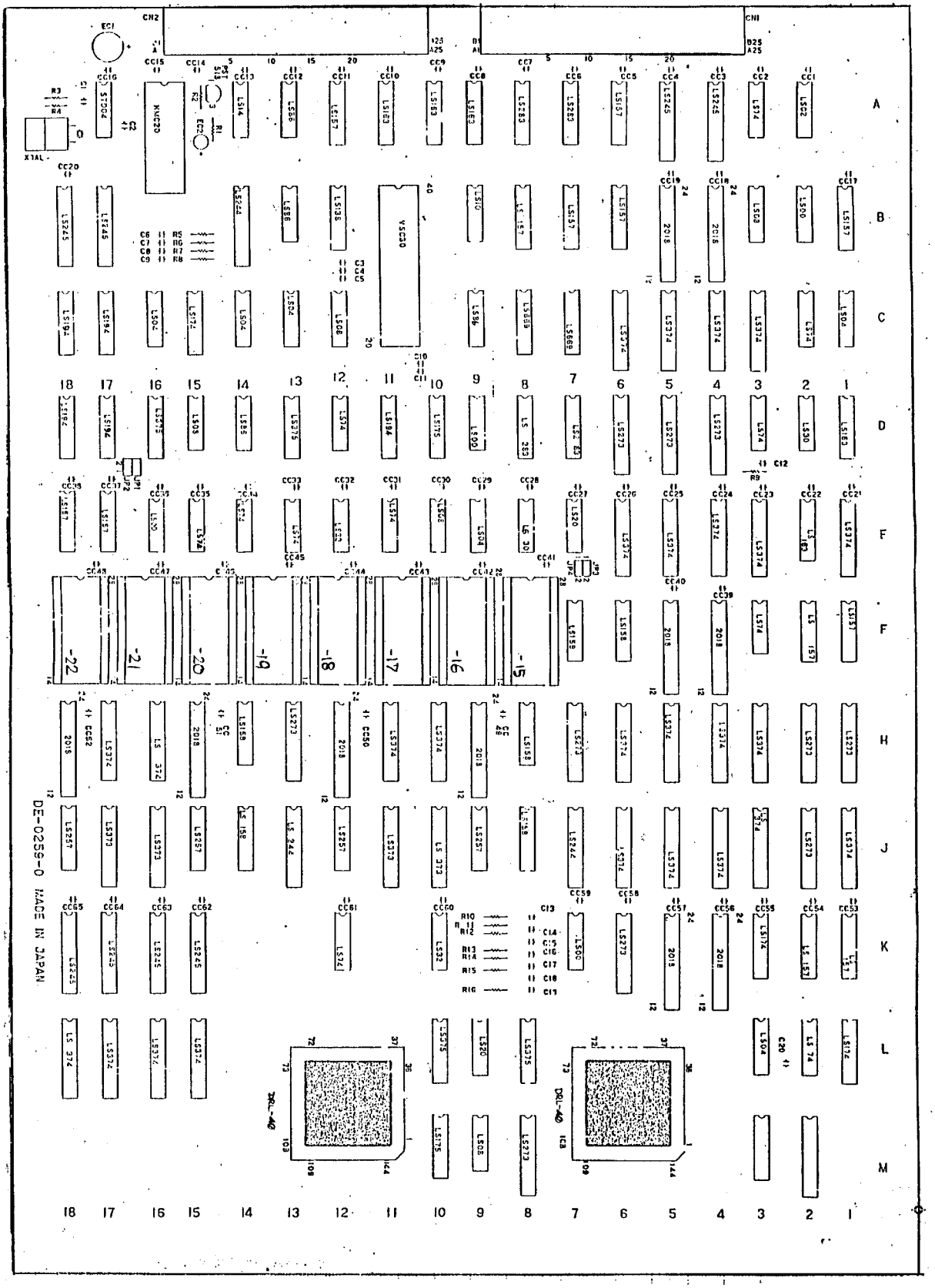
DE-0259-0 MADE IN JAPAN
CN1
CN2
XTAL
-16
-17
-18
-19
-20
-21
-22
DRL-40
DRL-40

c. Wells-Gardner 19K7000 Monitor Chassis.

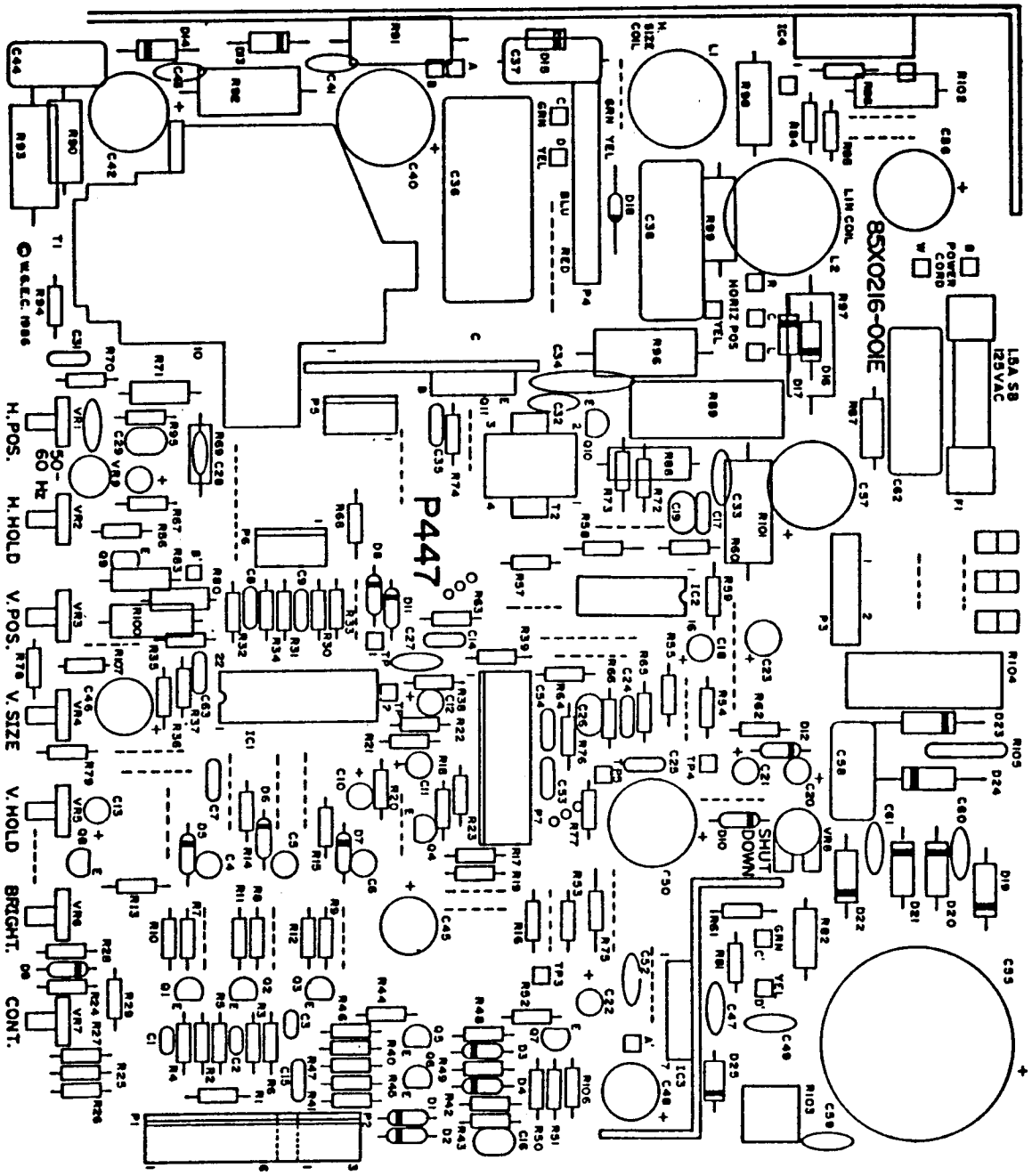

5. SCHEMATIC DIAGRAMS

a. DE-0269 PCB.....page 11-30

b. DE-0259 PCB.....page 31-47

c. Wells-Gardner K7000 Monitor.....48

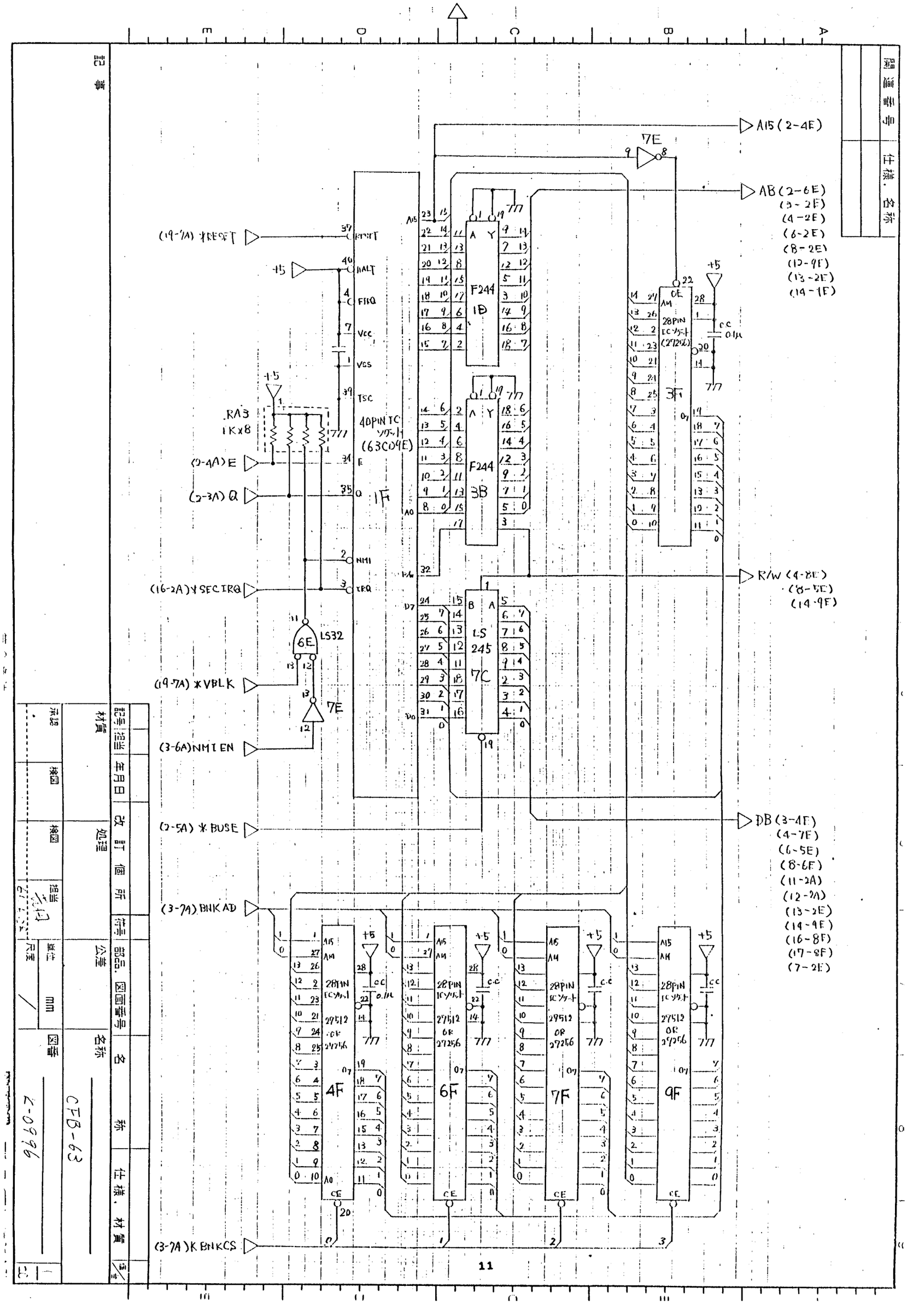
A15 (2-4E)
AB (2-6E) (3-2E) (4-2E) (6-2E) (8-2E) (12-9E) (13-2E) (14-1E)
R/W (4-8E) (8-5E) (14-9E)
DB (3-4E) (4-7E) (6-5E) (8-6E) (11-2A) (12-9A) (13-2E) (14-9E) (16-8E) (17-8E) (7-2E)
(19-7A) *RESET
(2-4A) E
(2-3A) Q
(16-2A) *SECIRQ
(19-7A) *VBLK
(3-6A) NMI EN
(2-5A) *BUSE
(3-7A) BNKAD
(3-7A) BNKCS
1F
3B
1B
3F
7C
6E
7E
4F
6F
7F
9F
LS32
LS245
F244
40PIN TC
(63C09E)
RAM 1K×8
28PIN IC
27512 OR 27256
0.1μ
11

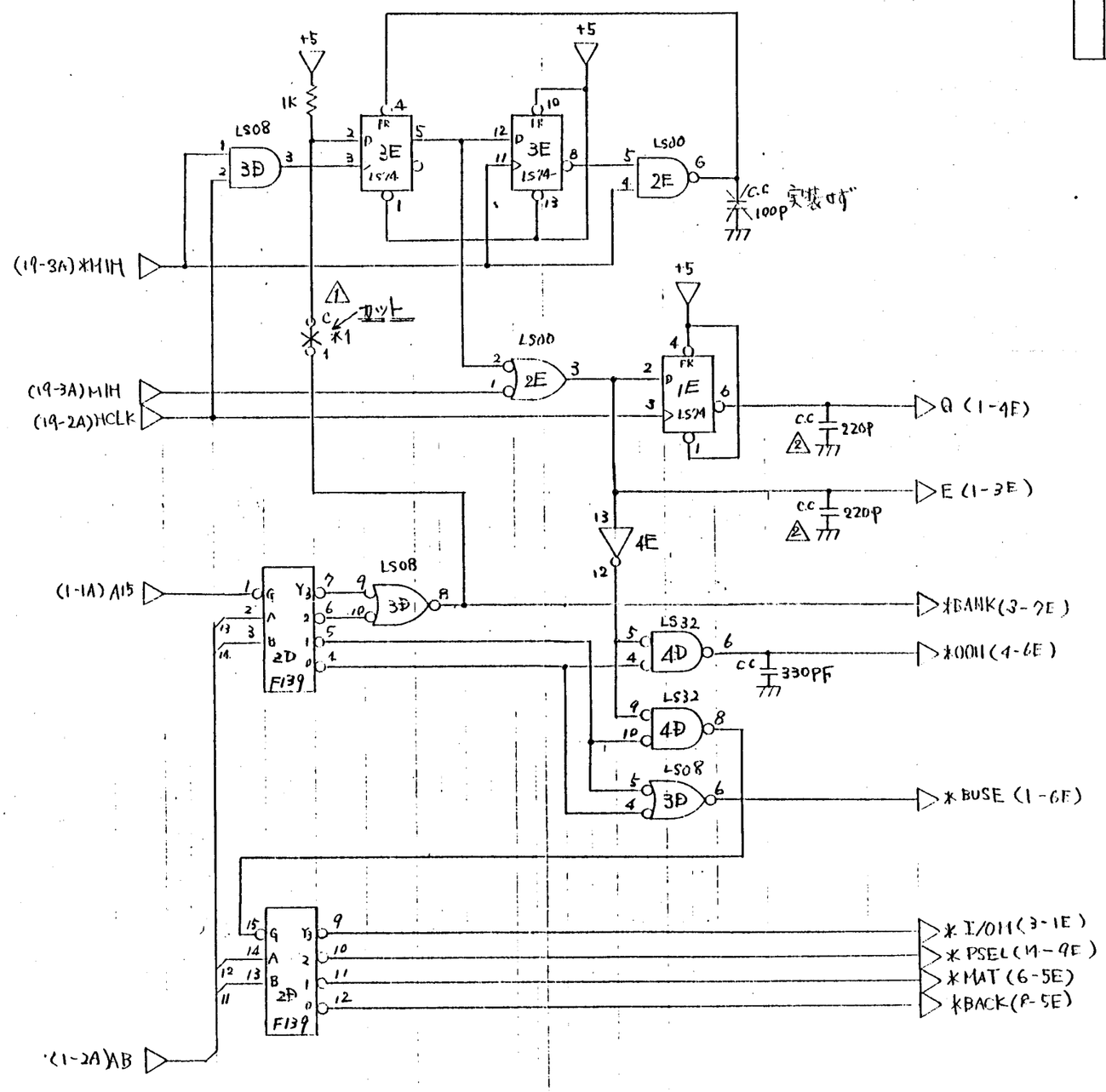
+5
1K
LS08
3E
FR
1E
1SM
LS00
2E
C.C
100P 実装せず
(19-3A) MWR
(19-3A) MIH
(19-2A) MCLK
Q (1-4F)
E (1-3E)
220P
4E
(1-1A) A15
LS08
3D
F139
2D
LS32
4D
330PF
*BUSE (1-6F)
*I/OW (3-1E)
*PSEL (1-9E)
*MAT (6-5E)
*BACK (8-5E)
(1-2A) AB

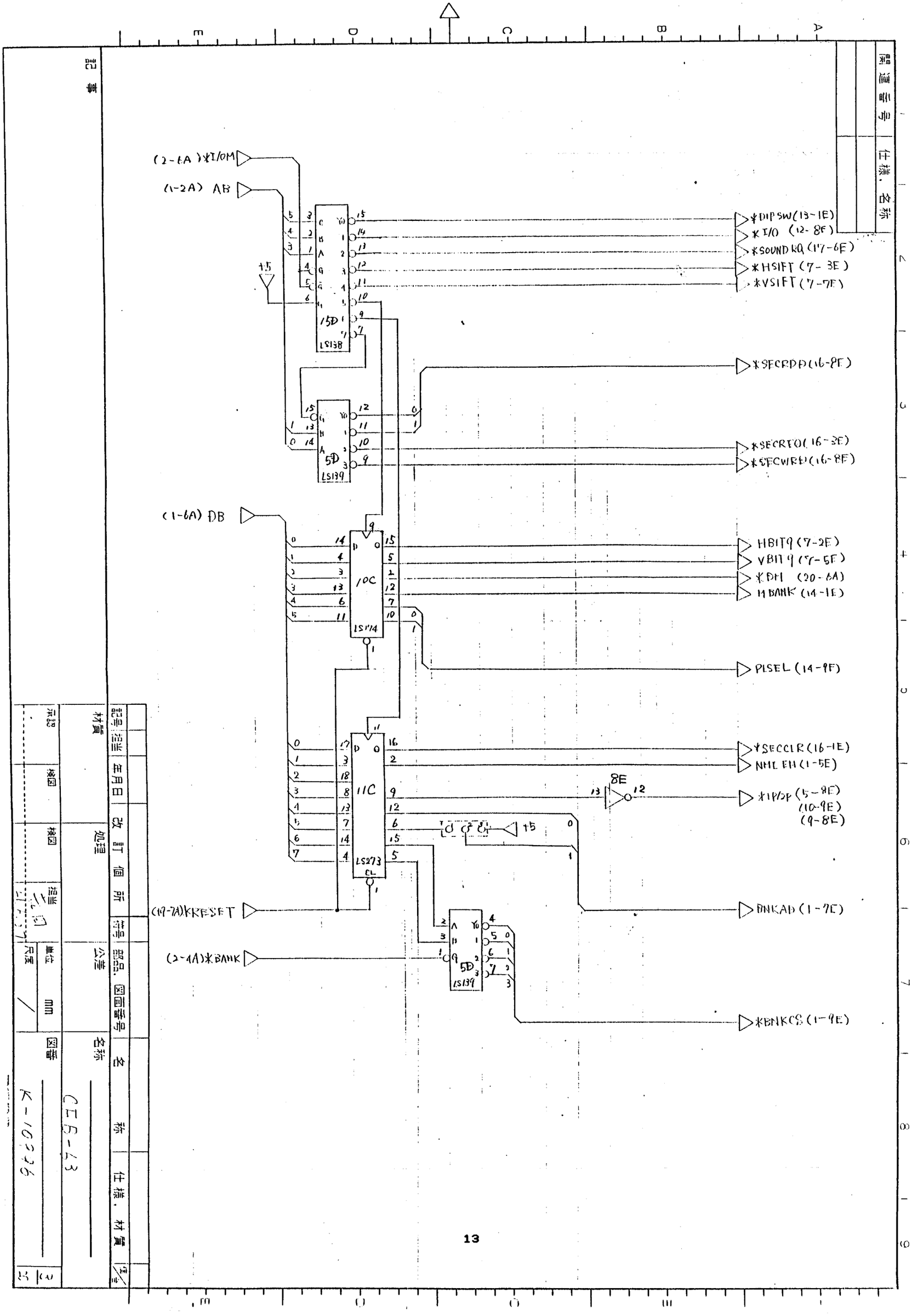
(2-8A) *IOM
(1-2A) AB
(1-6A) DB
(19-7A) KRESET
(2-4A) *BANK
*DIPSW(13-1E)
*I/O (12-8E)
*SOUNDRQ(17-6E)
*HSIFT(7-3E)
*VSIFT(7-7E)
*SECRDD(16-8E)
*SECRTO(16-3E)
*SECWRD(16-8E)
HBITQ(7-2E)
VBITQ(7-5E)
*DH (20-6A)
HBANK(14-1E)
PLSEL(14-9E)
*SECCLR(16-1E)
NMLENB(1-5E)
*IRQP(5-8E)
(10-9E)
(9-8E)
BNKAD(1-7E)
*BNKCS(1-9E)
15D
LS138
5D
LS139
10C
LS174
11C
LS273
8E
+5

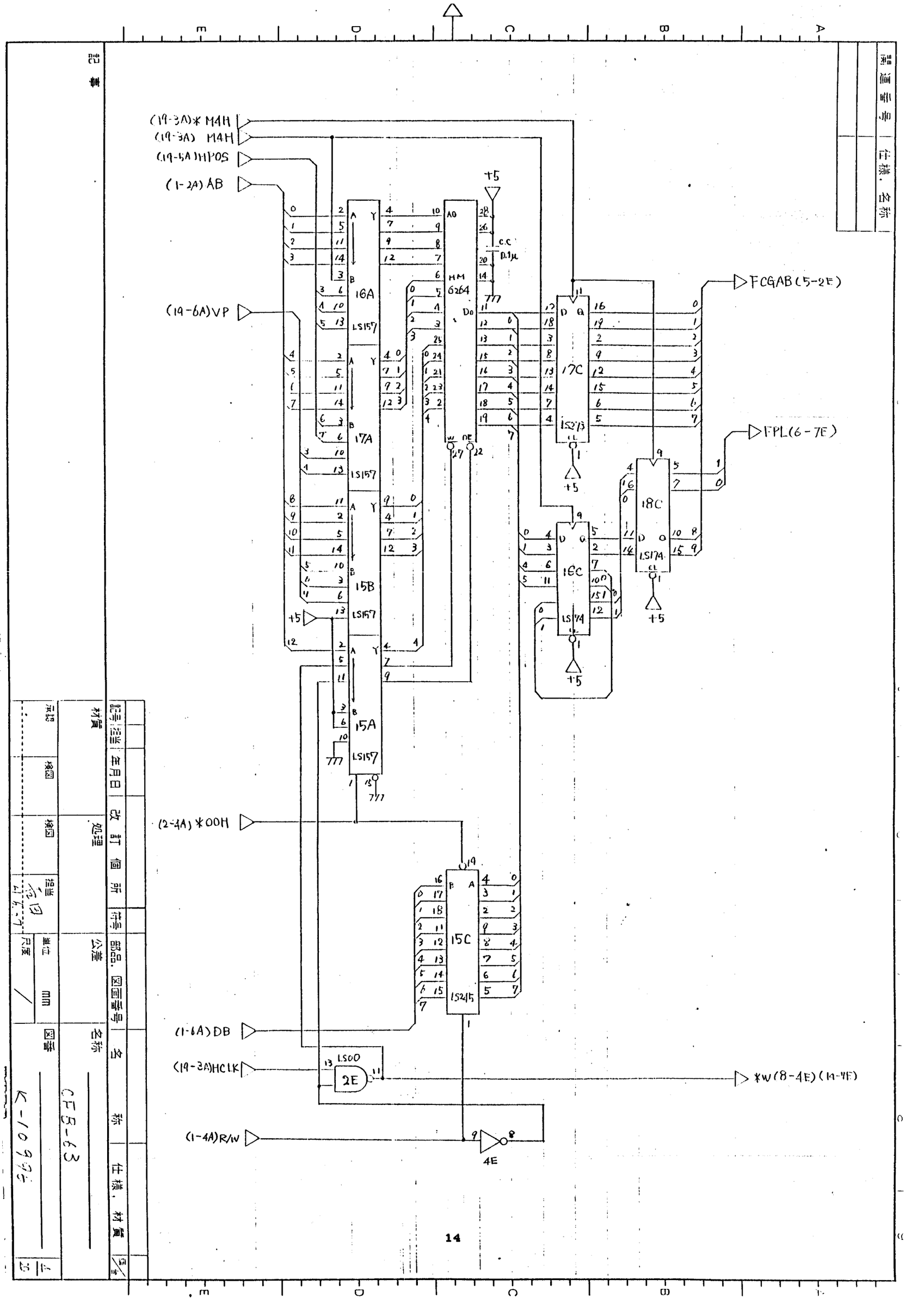
(19-3A)* M4H
(19-3A) M4H
(19-5A) HIPOS
(1-2A) AB
(19-6A) VP
(2-4A) *00H
(1-6A) DB
(19-3A) HCLK
(1-4A) R/W
+5
0.1μ
HM 6264
16A
17A
15B
15A
15C
16C
17C
18C
LS157
LS245
LS174
LS00
2E
4E
FCGAB (5-2E)
FPL (6-7E)
*W (8-4E) (14-4E)

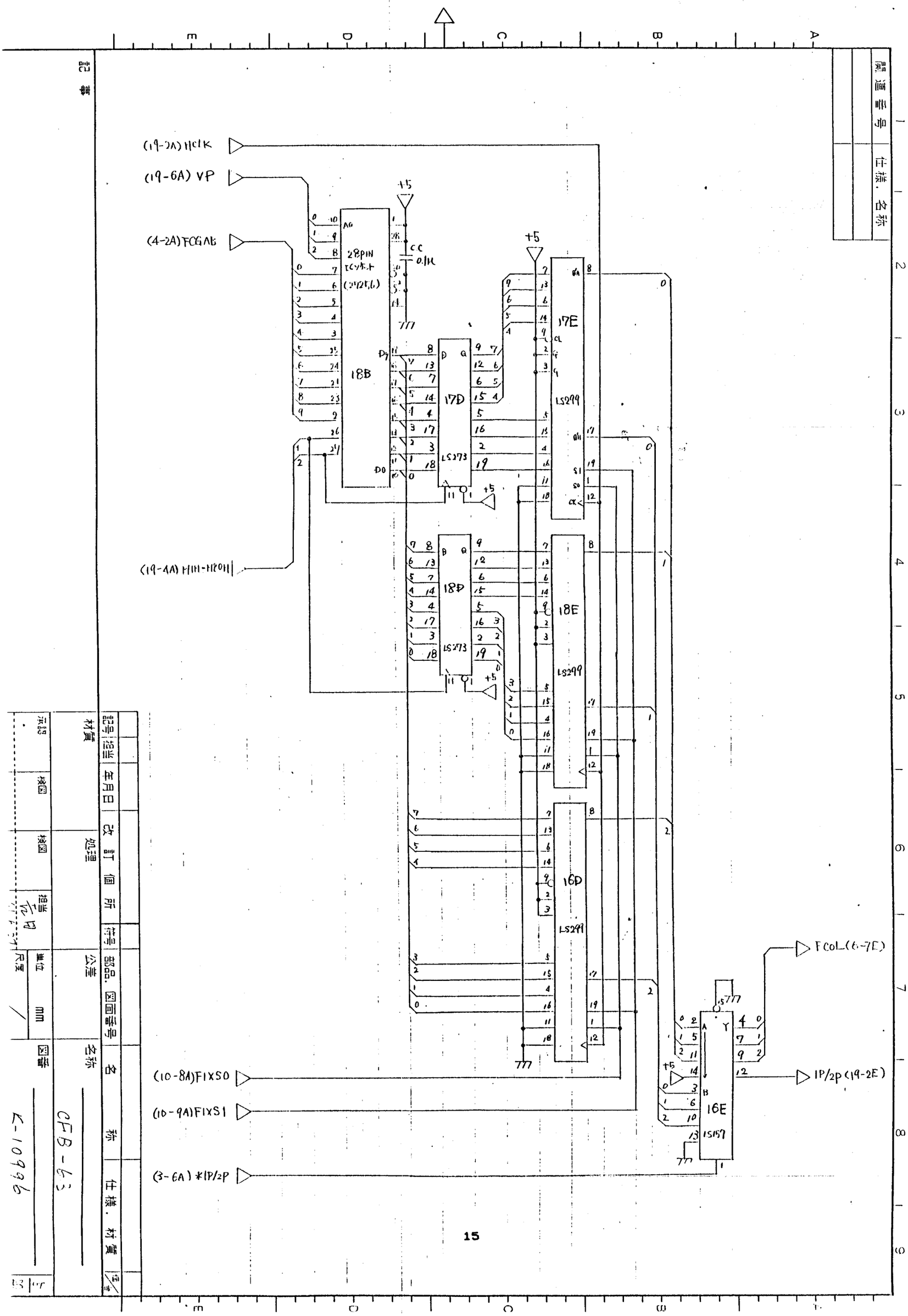
(19-2A) HCLK
(19-6A) VP
(4-2A) FCGATE
(19-4A) HDISP-HOLD
28PIN
CC 0.1μ
18B
17D
LS373
17E
LS299
18D
18E
16D
16E
LS157
(10-8A) FIXS0
(10-9A) FIXS1
(3-6A) *1P/2P
FCol_(6-7E)
1P/2P (19-2E)

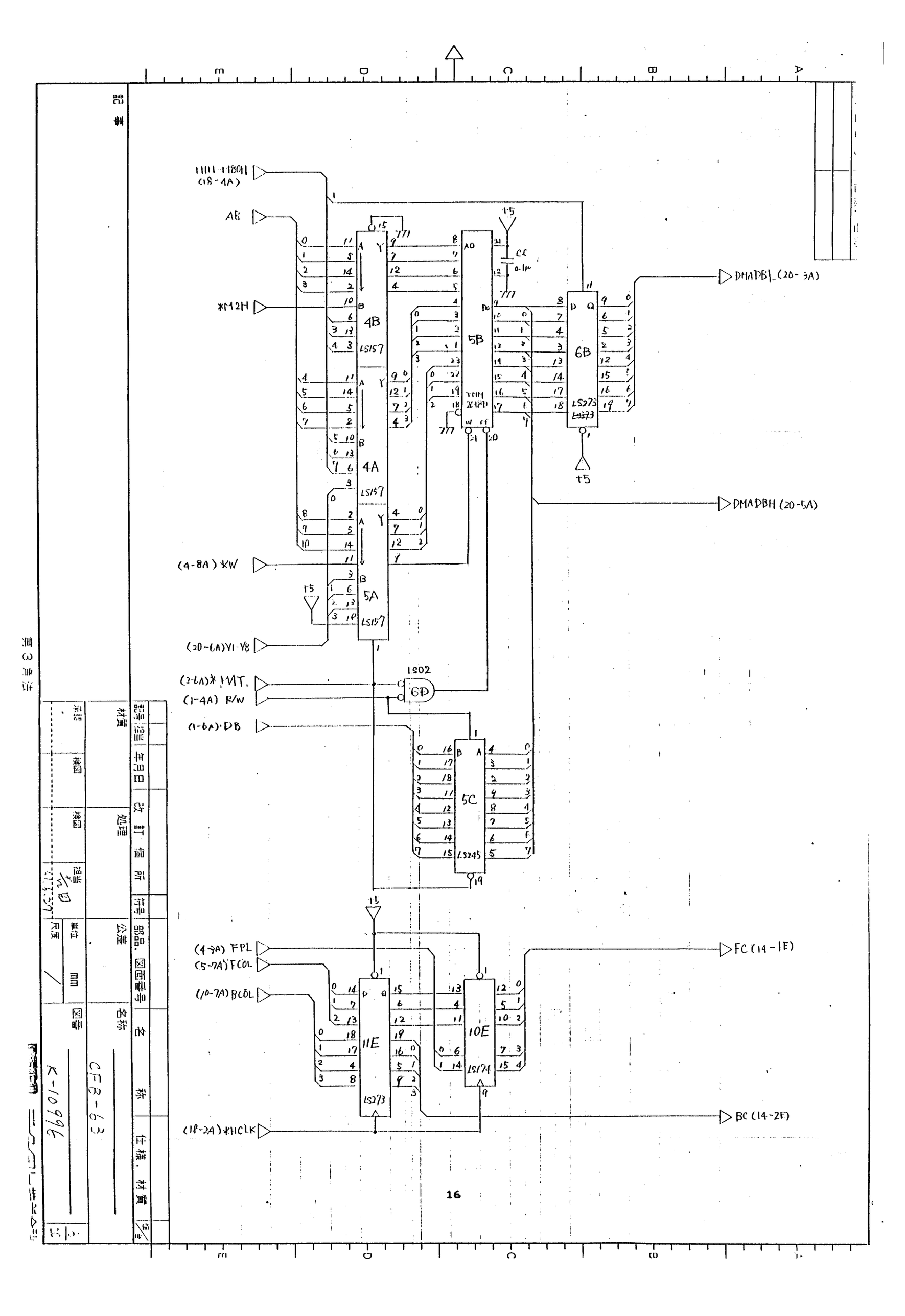
(18-4A)
AB
*M2H
4B
4A
5B
5A
6B
LS157
LS273
DMADB|_(20-3A)
DMADBH (20-5A)
(4-8A) *W
(20-6A) A1-A8
(2-6A) *IMT.
(1-4A) R/W
(1-6A) DB
2051
G9
5C
LS245
(4-3A) FPL
(5-7A) FCOL
(10-7A) BCOL
11E
10E
LS174
FC (14-1E)
BC (14-2E)
(18-2A) *IICLK
+5
CC
0.1μ

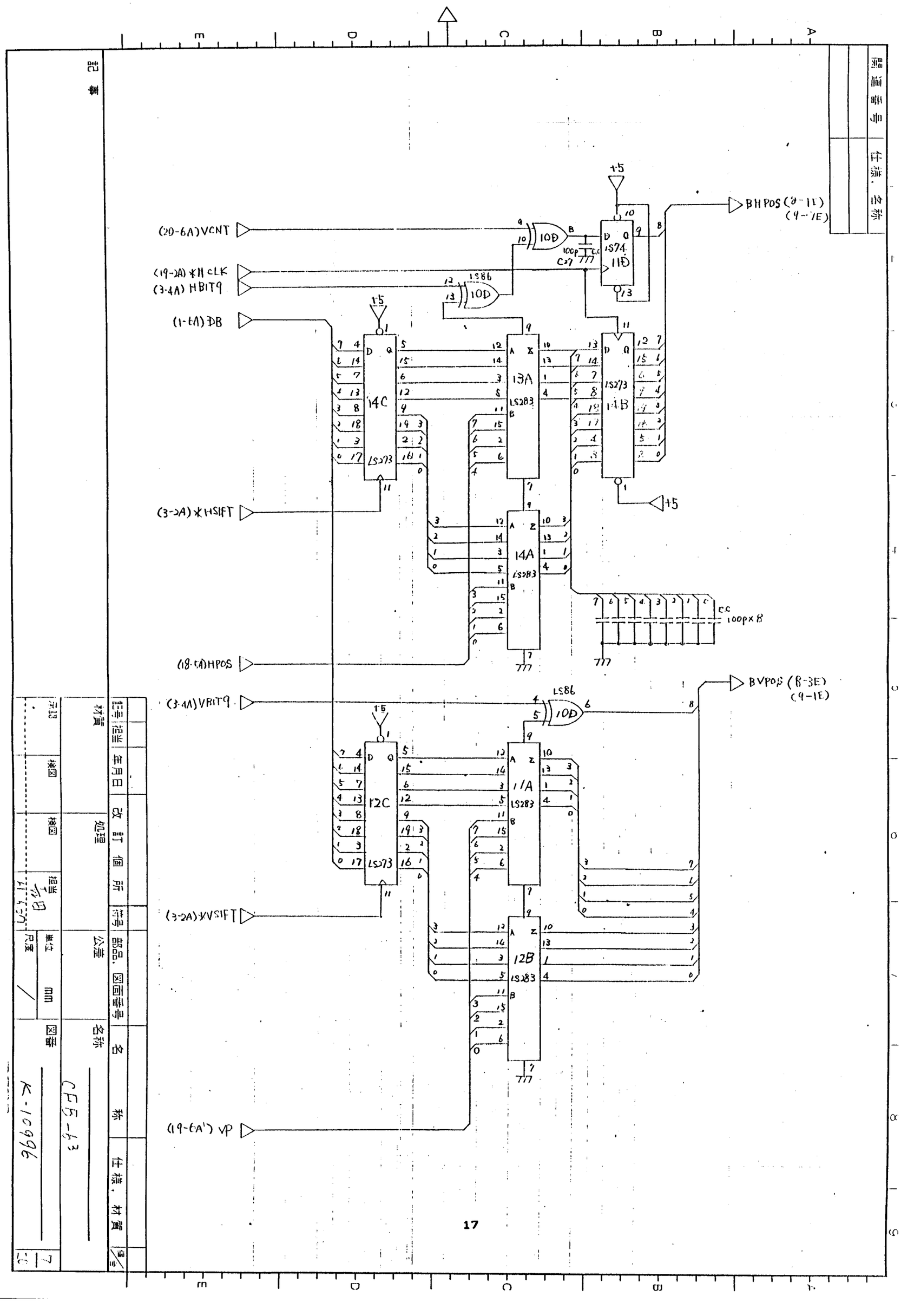
(20-6A)VCNT
(19-2A)*HCLK
(3-4A) HBITQ
(1-4A) DB
(3-2A)*HSHIFT
(18-6A)HPOS
(3-4A)VBITQ
(3-2A)*VSHIFT
(19-6A) VP
BHPOS (8-1E)
(9-7E)
BVPOS (8-3E)
(9-1E)
+5
10D
LS86
LS74
11D
100P
C27
14C
LS273
13A
LS283
14B
14A
12C
11A
12B
CC
100P×8
777

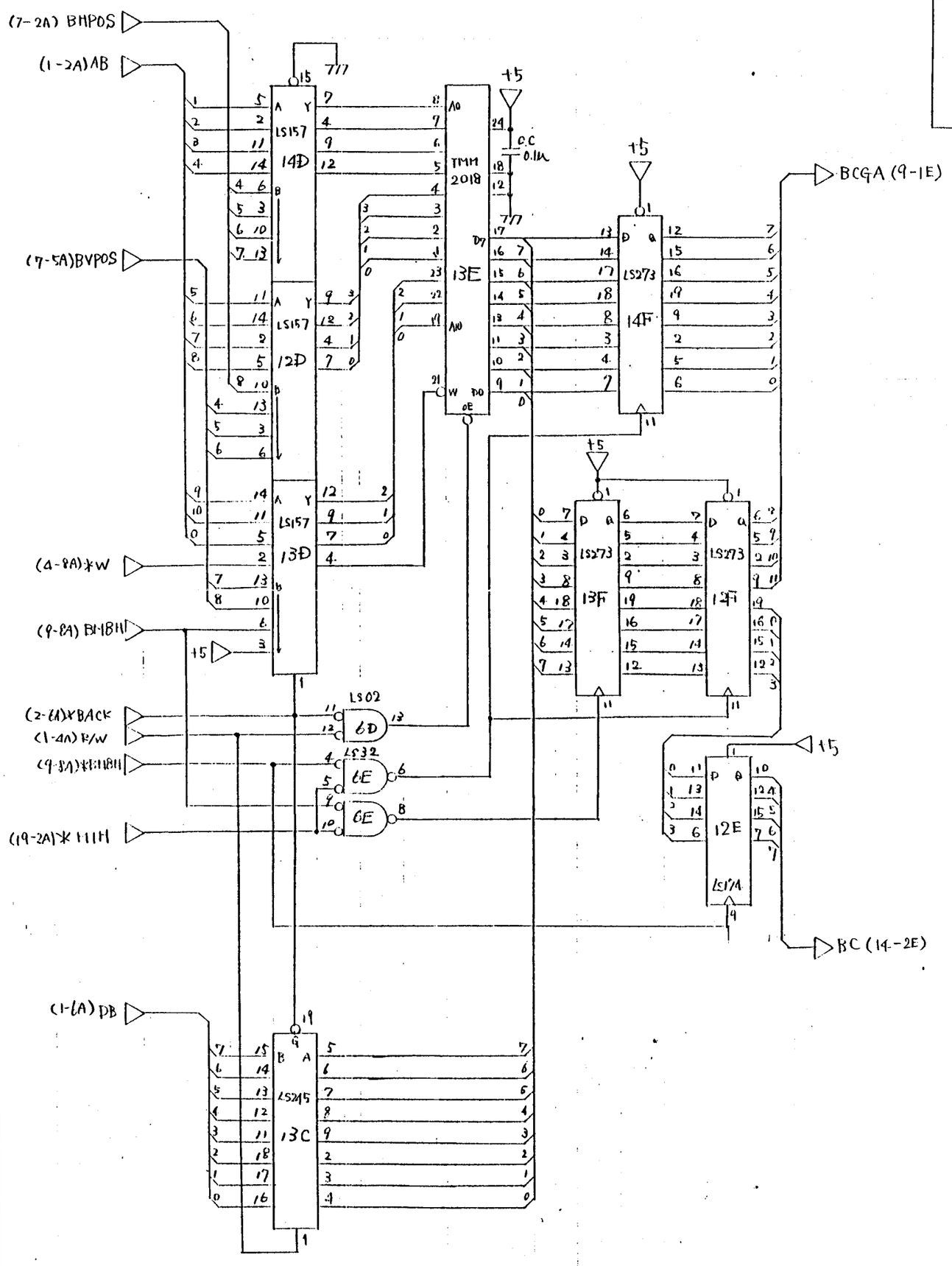
(7-2A) BHPOS
(1-2A) AB
(7-5A) BVPOS
(4-8A) *W
(9-8A) BVIBH
(2-6A) *BACK
(1-4A) R/W
(9-8A) BHIBH
(9-2A) *HIH
(1-6A) DB
LS157
14D
12D
13D
TMM 2018
13E
LS273
14F
13F
12F
LS02
6D
LS32
6E
LS245
13C
12E
LS174
+5
0.1μ
BCGA (9-1E)
BC (14-2E)

関連番号	仕様，名称

BC0L0 (10-1E)
BC0L1 (10-3E)
BC0L2 (10-4E)
BC0L3 (10-6E)
(7-5A) BVIOS
(8-2A) BIOA
(7-2A) BHIPOS
(3-6A) *IP/2P
BMRH (8-4E)
*BMRH (8-5F)
JP7
JP6
115
8E
7E
15E
LS10
LS86
14E
C64 100P
12H
10H
18H
16H
9H
7H
15H
13H
19

記事

記号	担当	年月日	改訂個所	符号	部品，図面番号	名称	仕様，材質	個数

材質	処理	公差	名称
			CFB-63

承認	検図	検図	担当	単位	図番
			元田	mm	K-10996
			87.6.27	尺度 /	

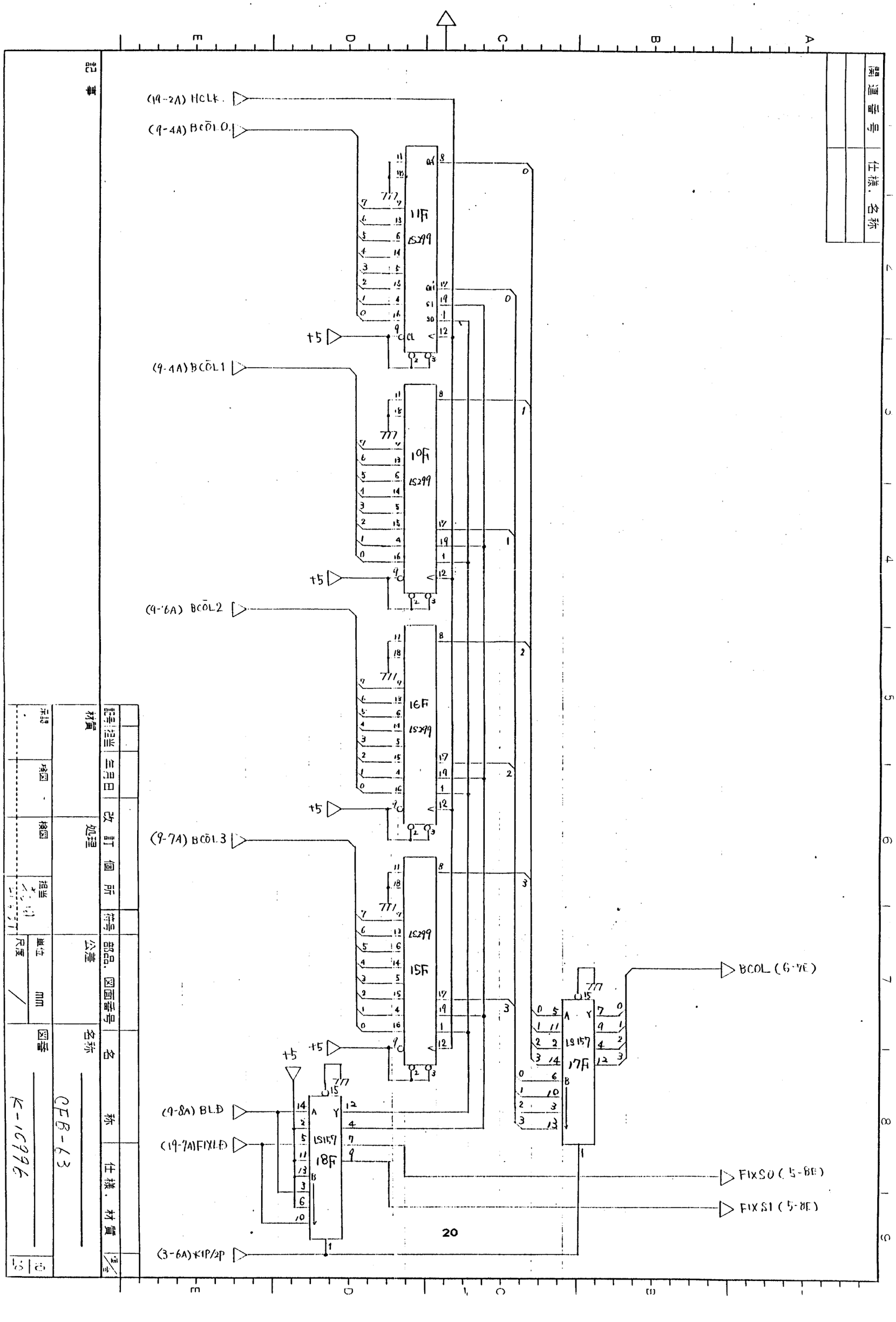
(19-2A) HCLK
(9-4A) BCOL0
(9-4A) BCOL1
(9-6A) BCOL2
(9-7A) BCOL3
(9-8A) BLD
(19-7A) FIXLD
(3-6A) ﾘｾｯﾄ
+5
11F
10F
16F
15F
18F
17F
LS299
LS157
BCOL (6-7E)
FIXS0 (5-8E)
FIXS1 (5-8E)
20

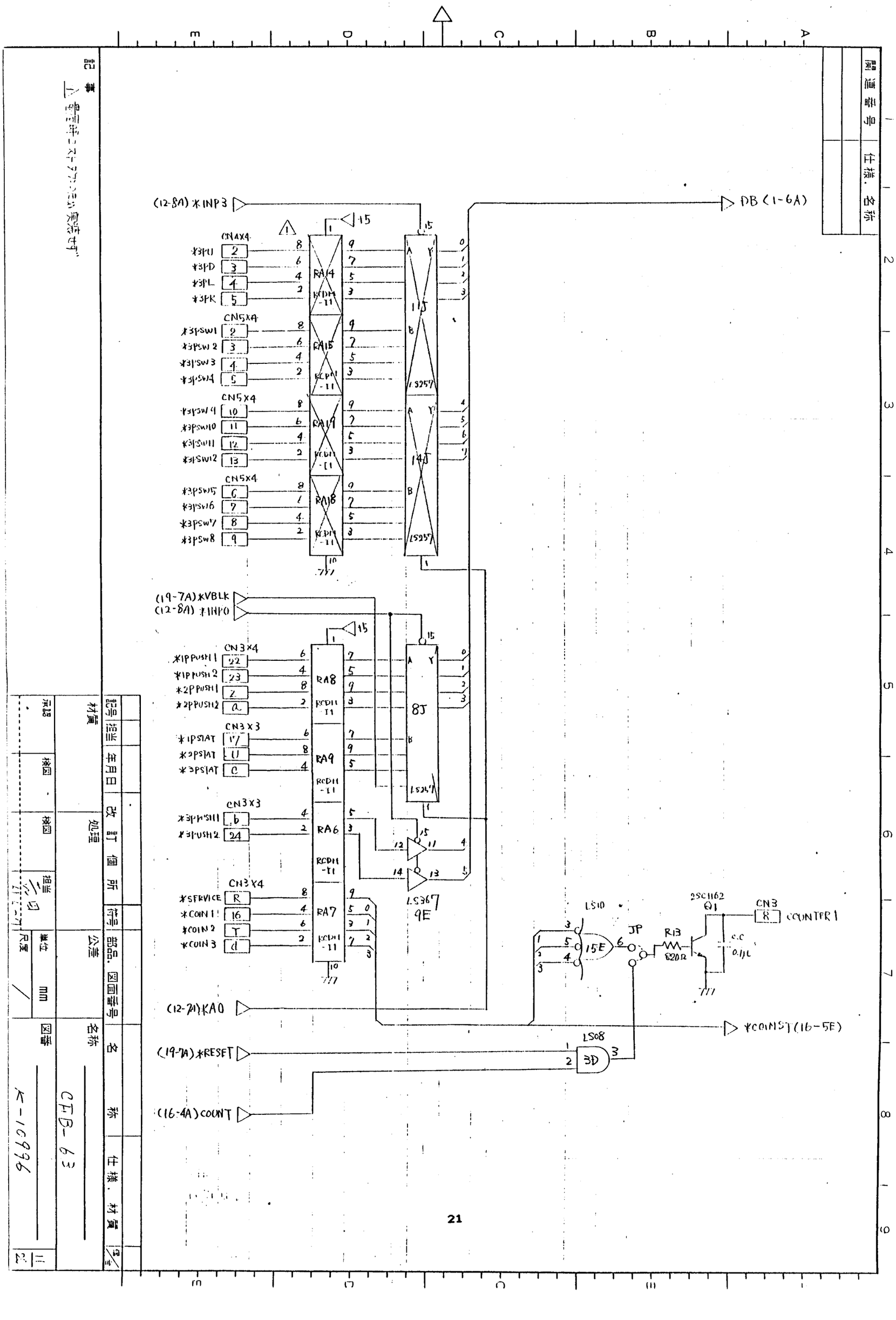
(12-8A) *INP3
DB (1-6A)
CN4X4
*3PU
*3PD
*3PL
*3PR
CN5X4
*3PSW1
*3PSW2
*3PSW3
*3PSW4
CN5X4
*3PSW9
*3PSW10
*3PSW11
*3PSW12
CN5X4
*3PSW5
*3PSW6
*3PSW7
*3PSW8
RA14
RA15
RA17
RA18
RDIH-11
11J
13J
14J
LS257
(19-7A) *VBLK
(12-8A) *INP0
CN3X4
*1PPUSH1
*1PPUSH2
*2PPUSH1
*2PPUSH2
CN3X3
*1PSTAT
*2PSTAT
*3PSTAT
CN3X3
*3PPUSH1
*3PUSH2
CN3X4
*SERVICE
*COIN1
*COIN2
*COIN3
RA8
RA9
RA6
RA7
8J
LS241
LS367
9E
LS10
15E
JP
RB
820Ω
2SC1162
Q1
0.1μ
CN3
COUNTER1
(12-2A) *A0
*COINST (16-5E)
(19-7A) *RESET
LS08
3D
(16-4A) COUNT

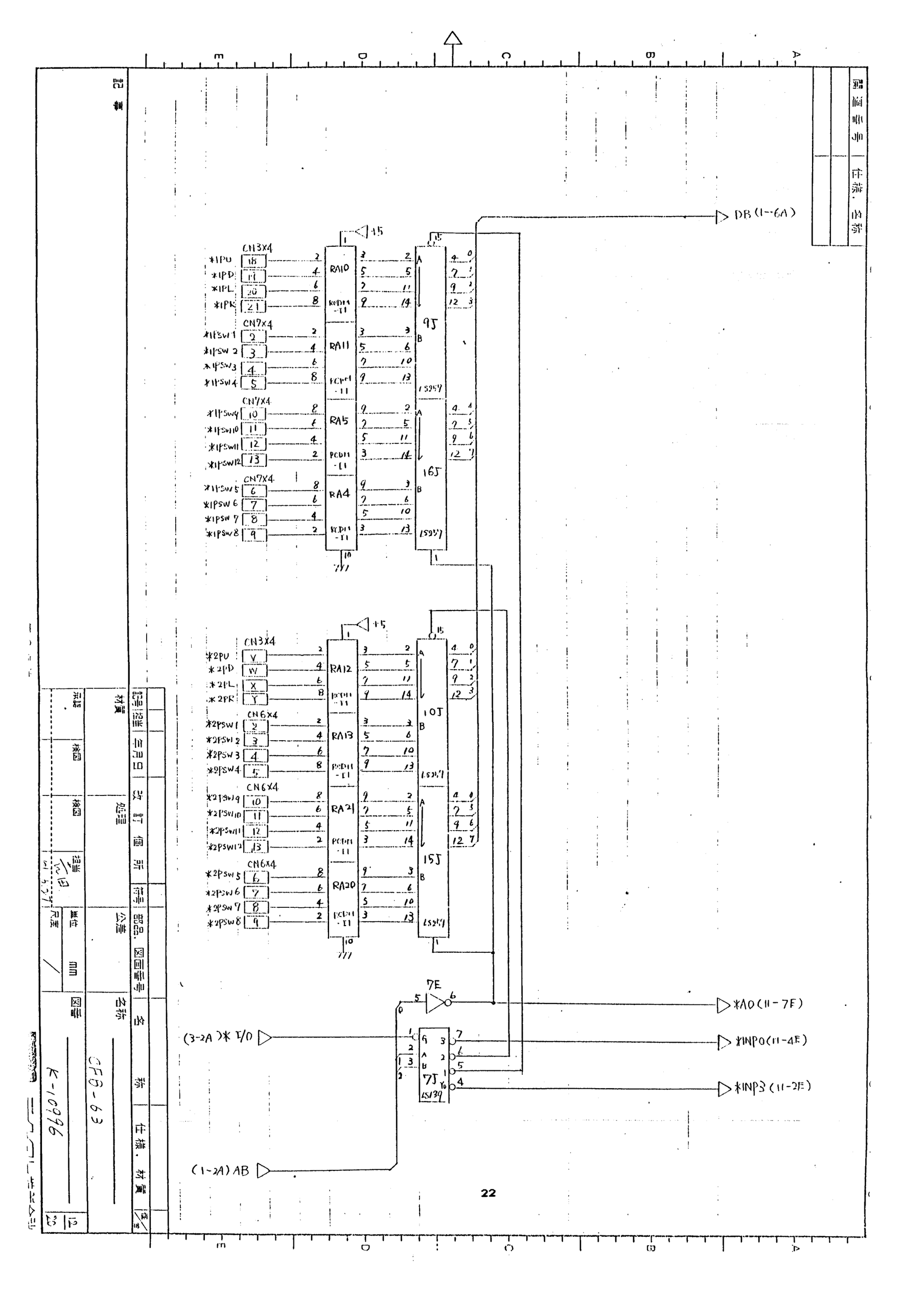
DB(1-6A)
CN3X4
*1PU
*1PD
*1PL
*1PR
CN7X4
*1PSW1
*1PSW2
*1PSW3
*1PSW4
CN7X4
*1PSW9
*1PSW10
*1PSW11
*1PSW12
CN7X4
*1PSW5
*1PSW6
*1PSW7
*1PSW8
RA10
RA11
RA5
RA4
9J
16J
CN3X4
*2PU
*2PD
*2PL
*2PR
CN6X4
*2PSW1
*2PSW2
*2PSW3
*2PSW4
CN6X4
*2PSW9
*2PSW10
*2PSW11
*2PSW12
CN6X4
*2PSW5
*2PSW6
*2PSW7
*2PSW8
RA12
RA13
RA21
RA20
10J
15J
7E
7J
(3-2A)*I/O
(1-2A)AB
*AO(11-7F)
*INPO(11-4E)
*INP3(11-2E)

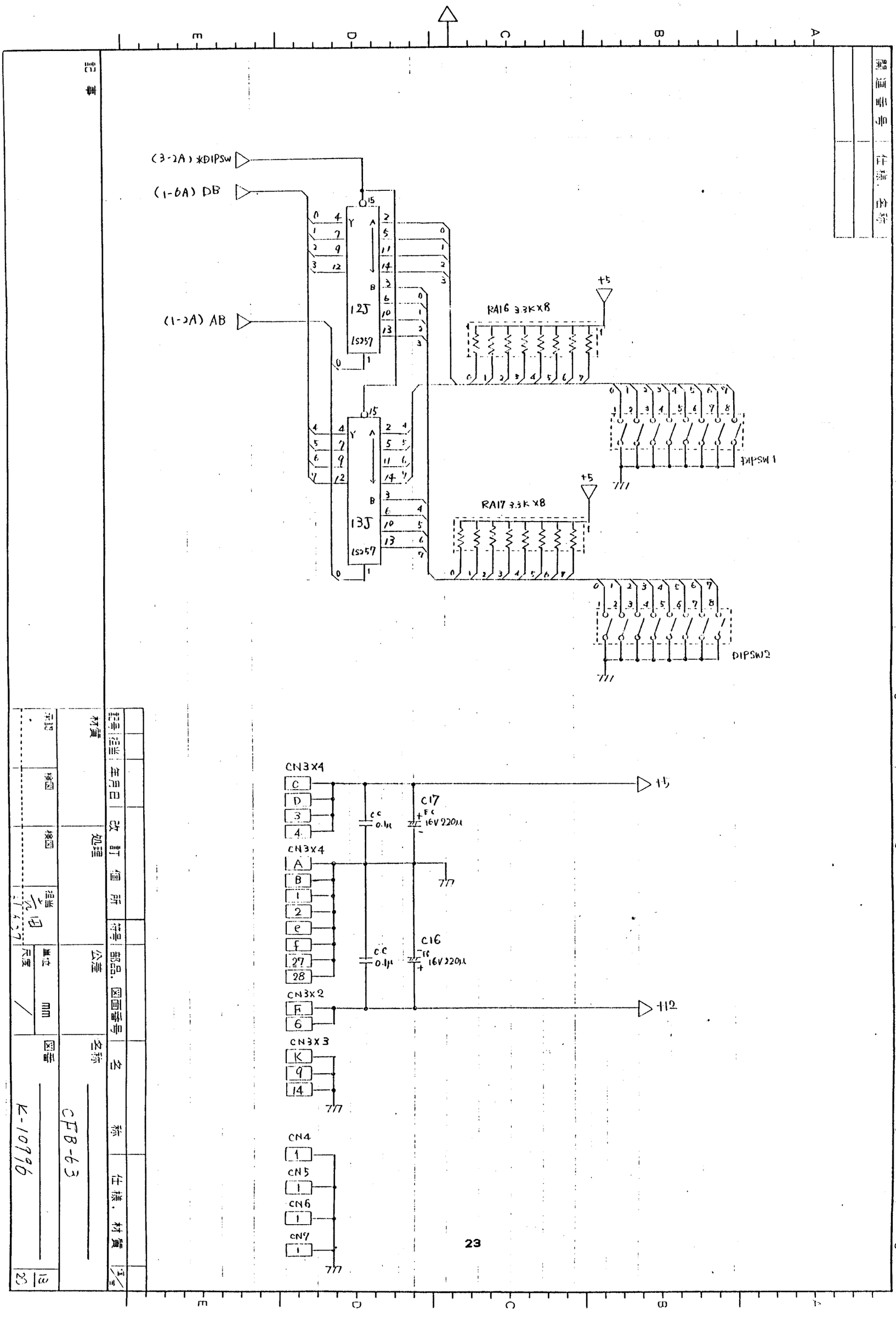
(3-2A) *DIPSW
(1-6A) DB
(1-2A) AB
12J
13J
LS257
RA16 3.3K×8
RA17 3.3K×8
DIPSW1
DIPSW2
CN3X4
CN3X4
CN3X2
CN3X3
CN4
CN5
CN6
CN7
C17
C16
0.1μ
16V 220μ
+5
+12

關連番号	仕様，名称

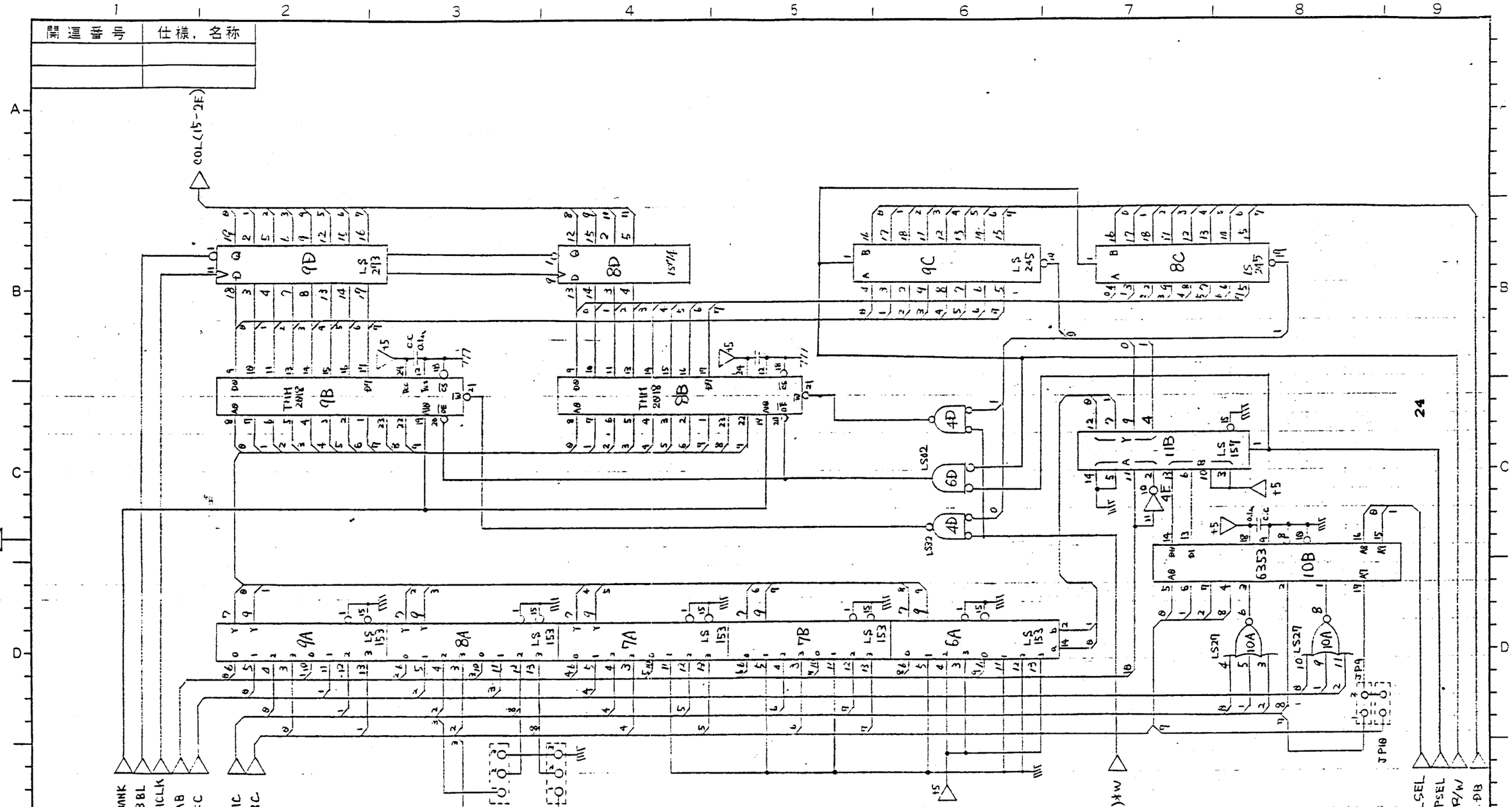

記号	担当	年月日	改訂個所	符号	部品，図面番号	名称	仕様，材質	個/set

記事

材質	処理	公差	名称
			CF8-63

承認	検図	検図	担当	単位 mm	図番
				尺度 /	K-10996

関連番号	仕様，名称

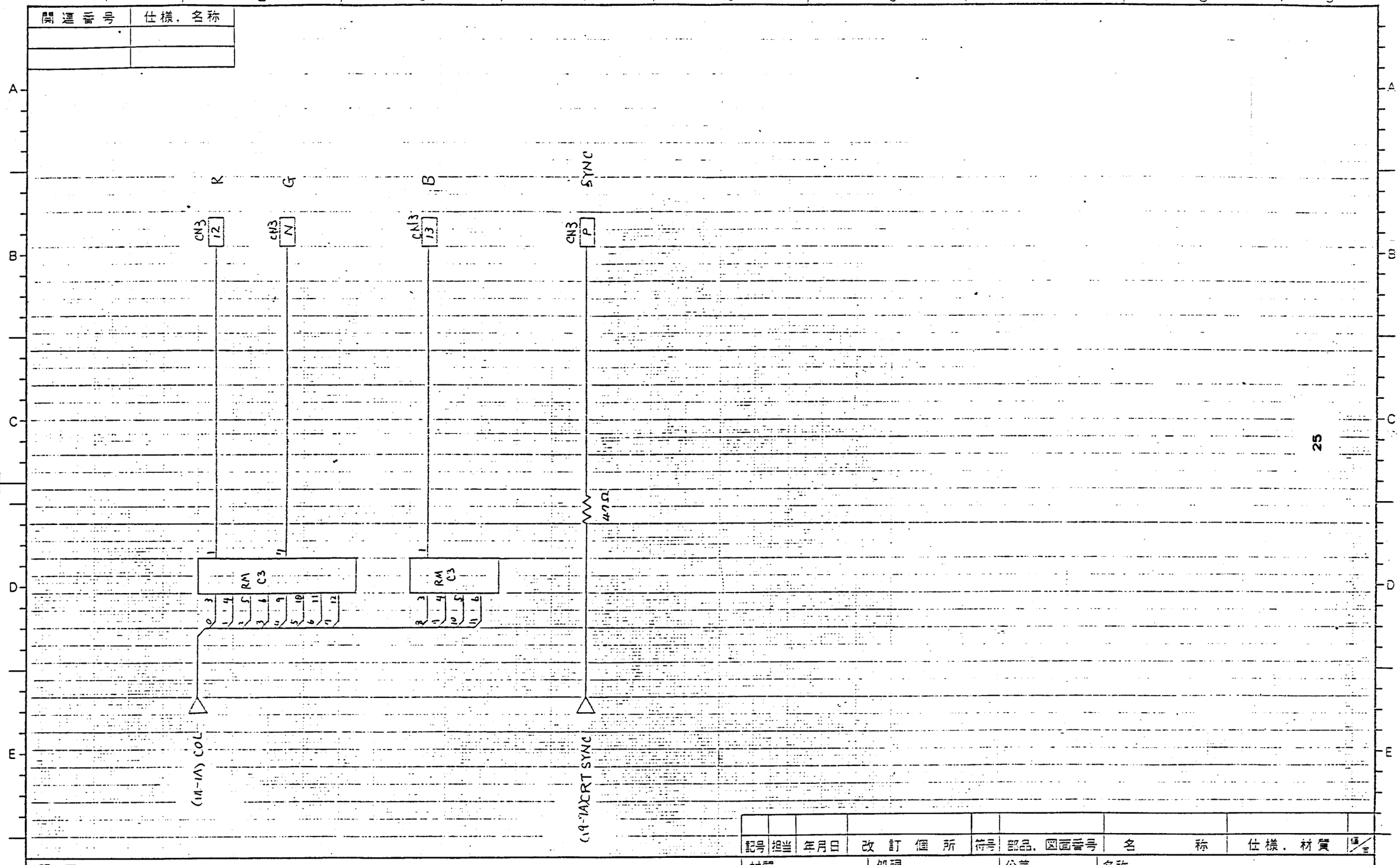

記号	担当	年月日	改訂個所	符号	部品，図面番号	名称	仕様，材質	個数

記事

材質	処理	公差	名称
			CRT-63

承認	検図	検図	担当	単位	図番
	91.6.5	藤崎 91.6.5	長田 91.6.5	mm	K-10996
				尺度 /	

15/20

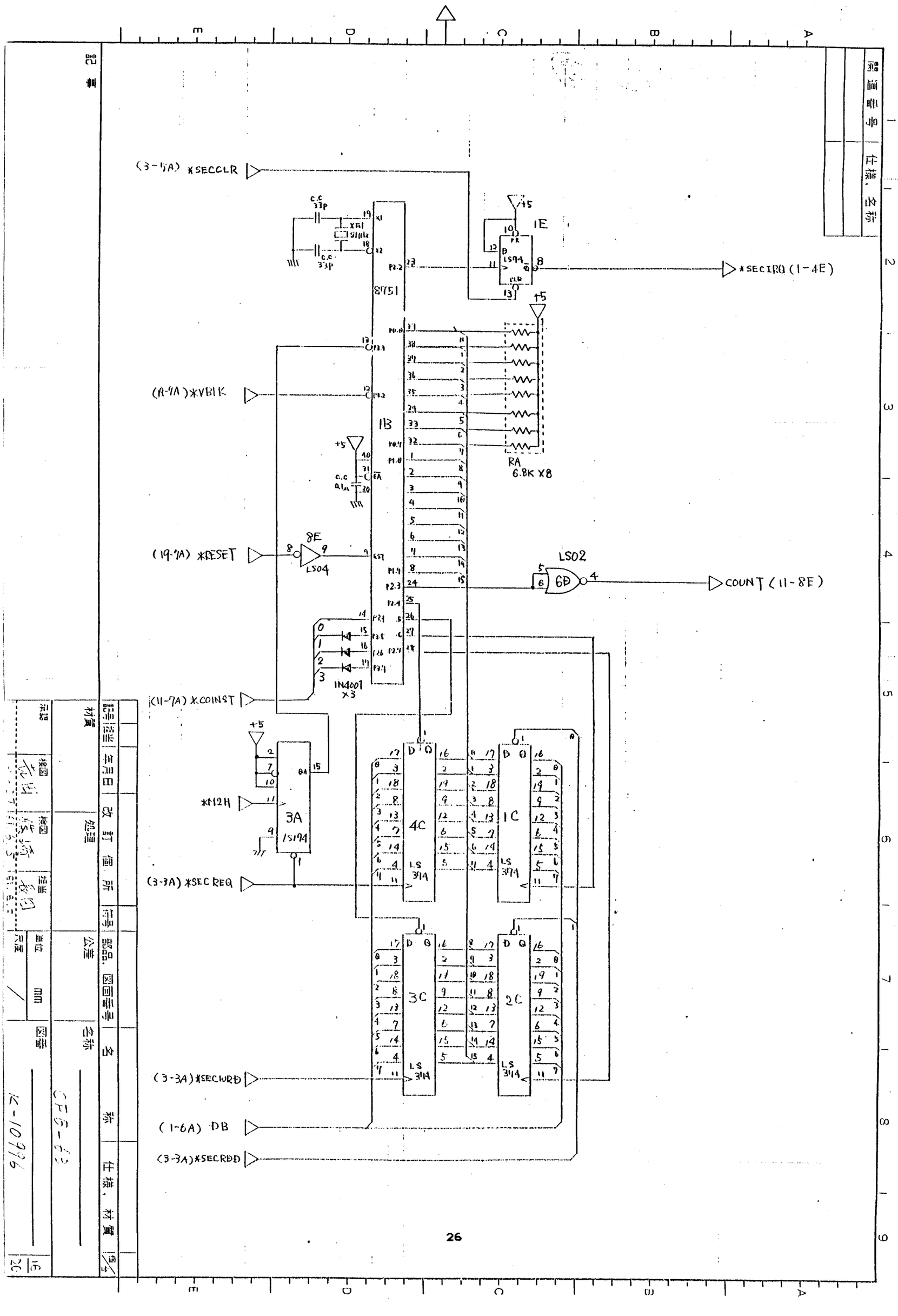
(3-5A) *SECCLR
*SECIRQ (1-4E)
(A-9A) *VBLK
(19-9A) *RESET
COUNT (11-8E)
(11-7A) XCOINST
(3-3A) *SEC REQ
(3-3A) *SECWRD
(1-6A) DB
(3-3A) *SECRDD
*M12H
RA
6.8K X8
IN4001
X3
LS04
LS02
LS
3/14
1S194
8751
1E
1B
8E
3A
4C
1C
3C
2C

関連番号	仕様，名称

SA0(18-3F)
*IOWL (18-3E)
*IOWH (18-3E)
*SWR (18-3F)
*SRD (18-3E)
SDB (18-1F)
DB (1-6A)
(19-7A)* RESET
(19-3A)*IRQH
(18-2B)*STRQ
(3-2A)*SOUNDRQ

7J LS139
6H TMM2015P
5H 28PIN 12-7F-4 (27512)
4E LS32
5E LS32
4E
6J LS245
6C LS244
6K LS194
4E
5J 6502A
4E
0.1μ C.C
220K
777
+5

記号	担当	年月日	改訂個所	符号	部品．図面番号	名称	仕様．材質	個/台

記事

材質	処理	公差	名称
			CFB-63

承認	検図	検図	担当	単位 mm	図番	
				尺度 /	K-10996	17/20

27

関連番号	仕様，名称

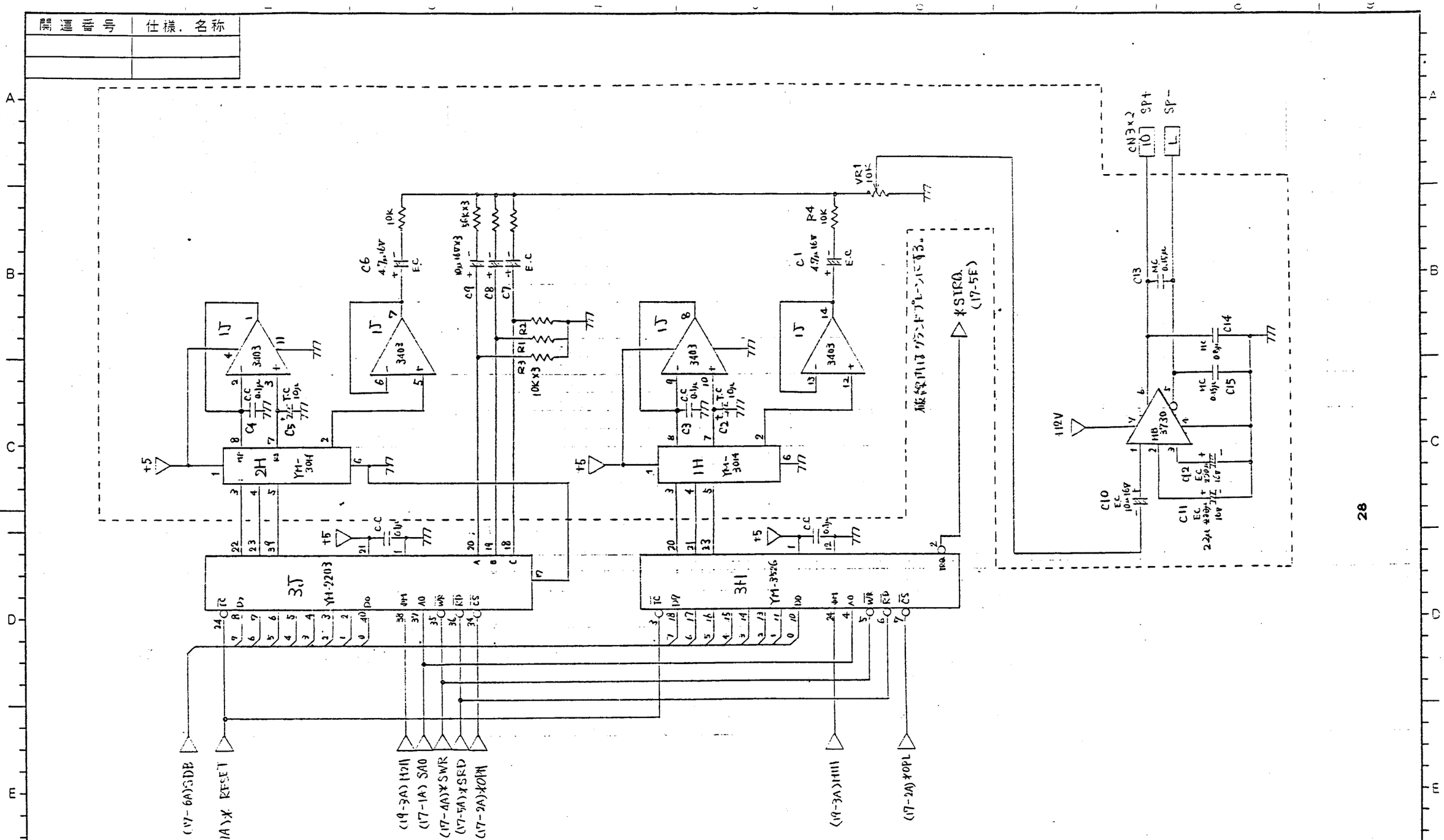

記号	担当	年月日	改訂個所	符号	部品，図面番号	名称	仕様，材質	個/台

記事

材質	処理	公差	名称
			CFB-63

承認	検図	検図	担当	単位 mm	図番	1/2
				尺度 /	K-16996	

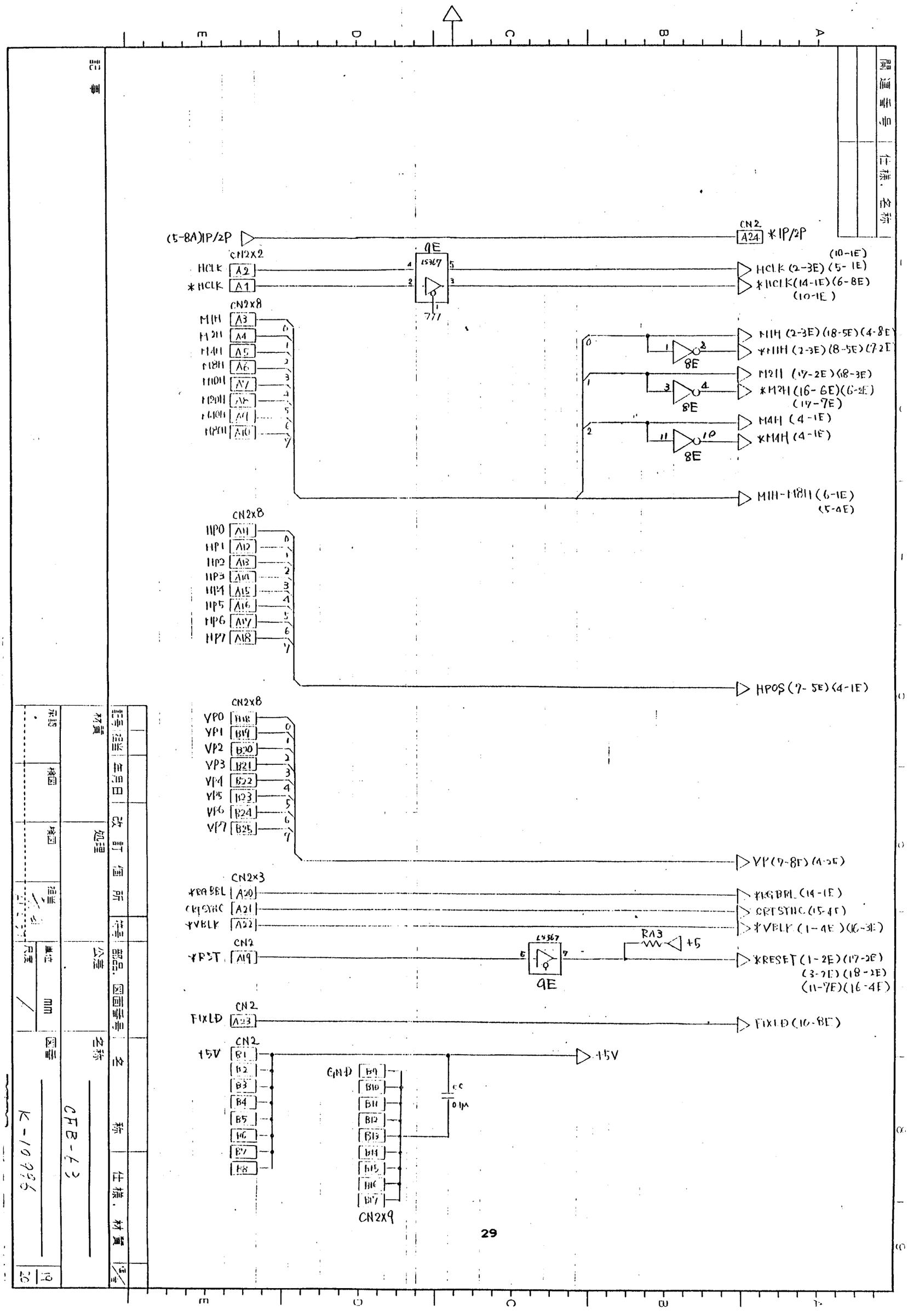
(5-8A)IP/2P
CN2
A24
*IP/2P
CN2x2
HCLK A2
*HCLK A1
9E
LS367
(10-1E)
HCLK (2-3E) (5-1E)
*HCLK (14-1E) (6-8E) (10-1E)
CN2x8
MIH A3
MI2H A4
MI4H A5
MI8H A6
MI0H A7
MI9H A8
MI1H A9
MI2H A10
8E
MIH (2-3E) (18-5E) (4-8E)
*MIH (2-3E) (8-5E) (7-2E)
MI2H (17-2E) (8-3E)
*MI2H (16-6E) (6-2E) (17-7E)
MIH (4-1E)
*MIH (4-1E)
MIH-MI8H (6-1E) (5-9E)
CN2x8
HP0 A11
HP1 A12
HP2 A13
HP3 A14
HP4 A15
HP5 A16
HP6 A17
HP7 A18
HPOS (7-5E) (4-1E)
CN2x8
VP0 B18
VP1 B19
VP2 B20
VP3 B21
VP4 B22
VP5 B23
VP6 B24
VP7 B25
VP (7-8E) (4-5E)
CN2x3
*RASBRL A20
CRTSYNC A21
*VBLK A22
*RASBRL (14-1E)
CRTSYNC (15-4E)
*VBLK (1-4E) (16-3E)
CN2
*RST A19
LS367
9E
RA3
+5
*RESET (1-2E) (17-2E) (3-7E) (18-2E) (11-7E) (16-4E)
CN2
FIXLD A23
FIXLD (16-8E)
CN2
+15V B1
B2
B3
B4
B5
B6
B7
B8
+15V
GND B9
B10
B11
B12
B13
B14
B15
B16
B17
CN2x9
0.1μ
29

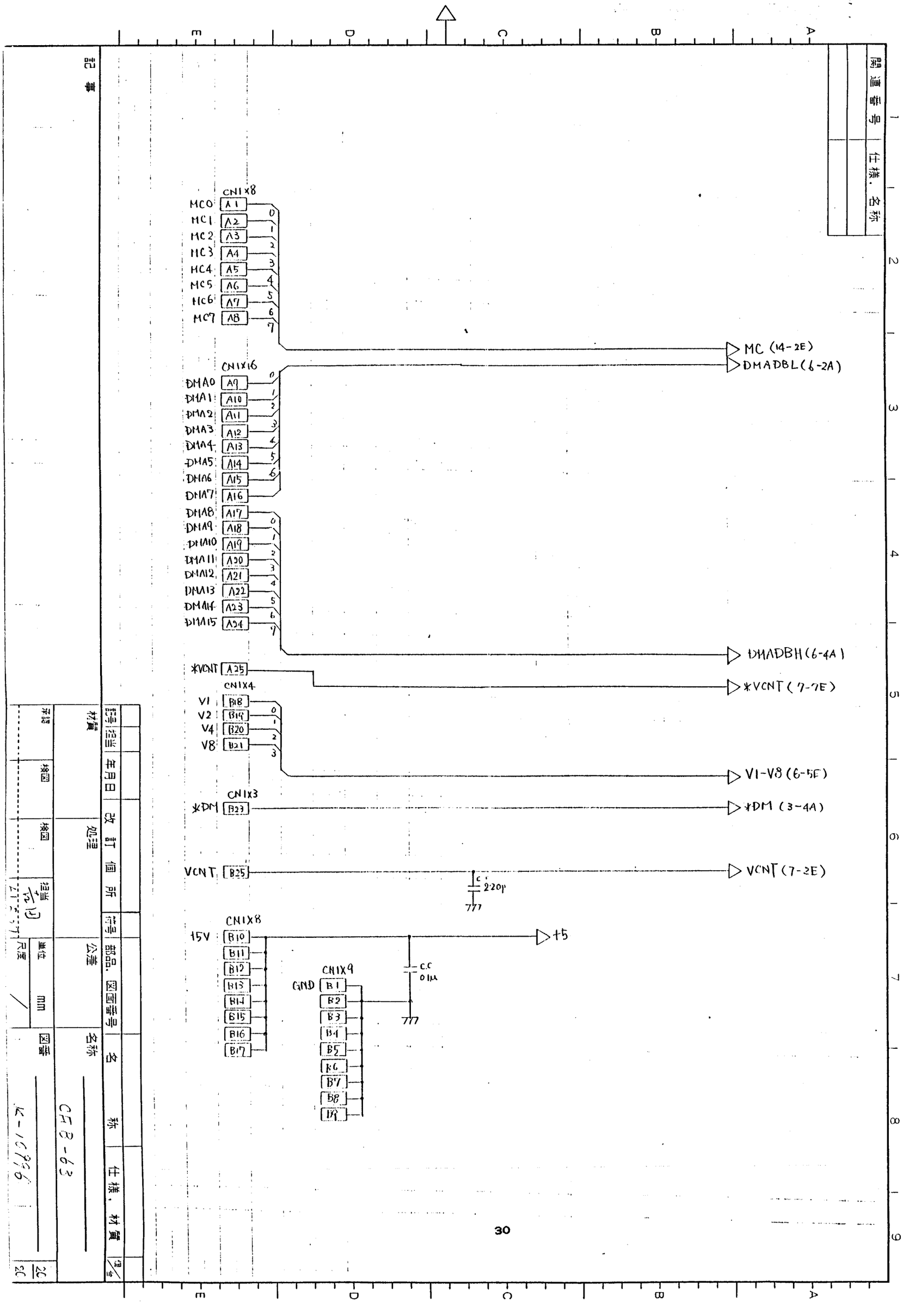
CN1X8
MC0 A1
MC1 A2
MC2 A3
MC3 A4
MC4 A5
MC5 A6
MC6 A7
MC7 A8
MC (14-2E)
CN1X16
DMA0 A9
DMA1 A10
DMA2 A11
DMA3 A12
DMA4 A13
DMA5 A14
DMA6 A15
DMA7 A16
DMA8 A17
DMA9 A18
DMA10 A19
DMA11 A20
DMA12 A21
DMA13 A22
DMA14 A23
DMA15 A24
DMADBL(6-2A)
DMADBH(6-4A)
*VCNT A25
*VCNT(7-7E)
CN1X4
V1 B18
V2 B19
V4 B20
V8 B21
V1-V8(6-5E)
CN1X3
*DM B23
*DM (3-4A)
VCNT B25
VCNT(7-2E)
C' 220P
CN1X8
15V B10
B11
B12
B13
B14
B15
B16
B17
+5
CC 0.1μ
CN1X9
GND B1
B2
B3
B4
B5
B6
B7
B8
B9

適事事	仕様，名称

*1 は STD の使用

X'tal 12MHz

C.C 68P

C.C 0.01μ

470Ω

HMC 20

VSC 30

31

記号	担当	年月日	改訂個所	符号	部品，図面番号	名称	仕様，材質	個/台

記事

材質	処理	公差	名称
			DNOA-81 回路図

承認	検図	検図	担当	単位	mm	図番
82.1.23	82.1.23	81.5.26	81.5.21	尺度	1	LK-18823

1/17

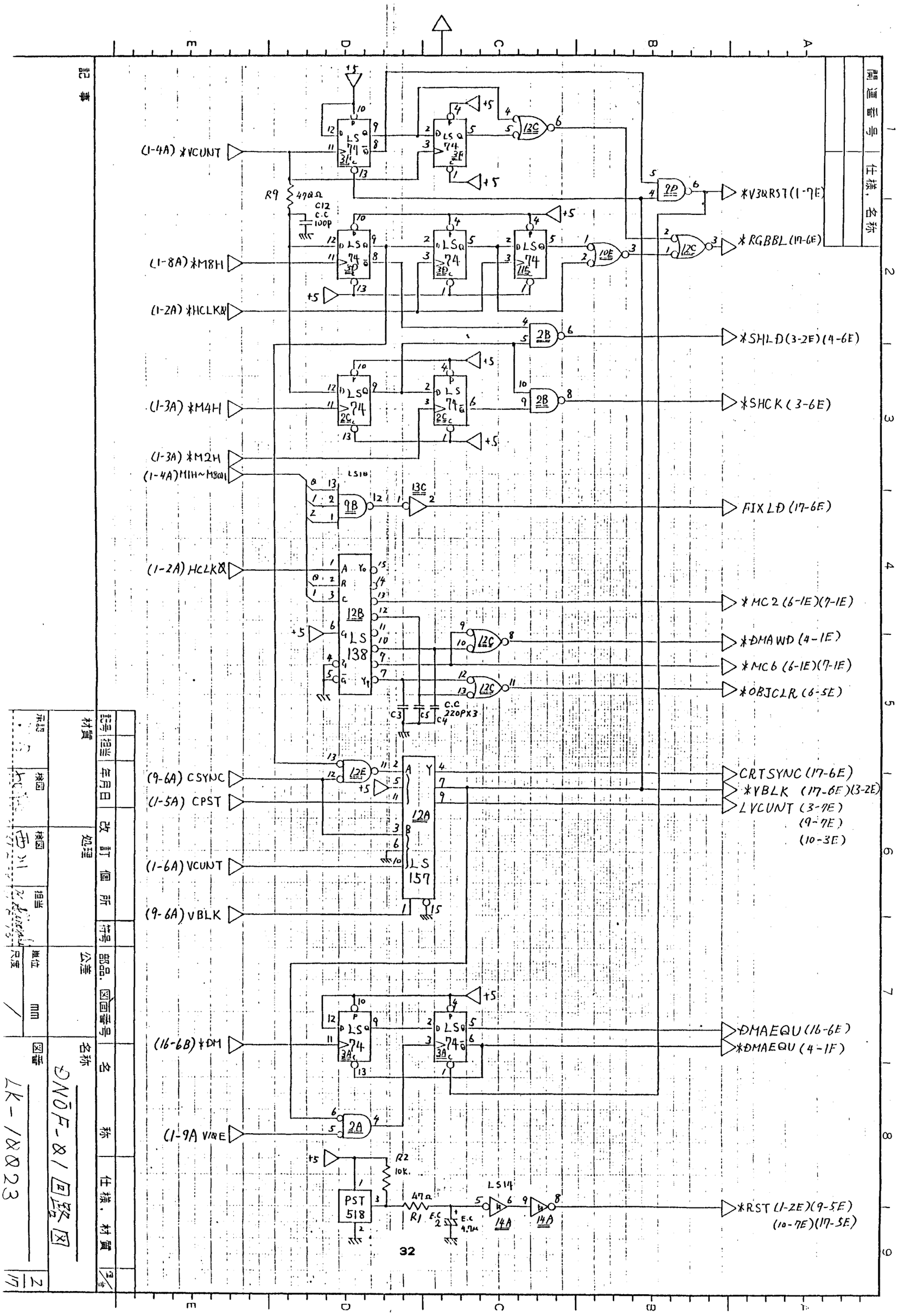

記事

記号	担当	年月日	改訂個所

材質	処理	公差

尺度	単位	承認	検図	検図	担当
/	mm				

図番号	名称	仕様，材質	備考
LK-1X023	SNOF-X1回路図		2/17

関連番号	仕様，名称

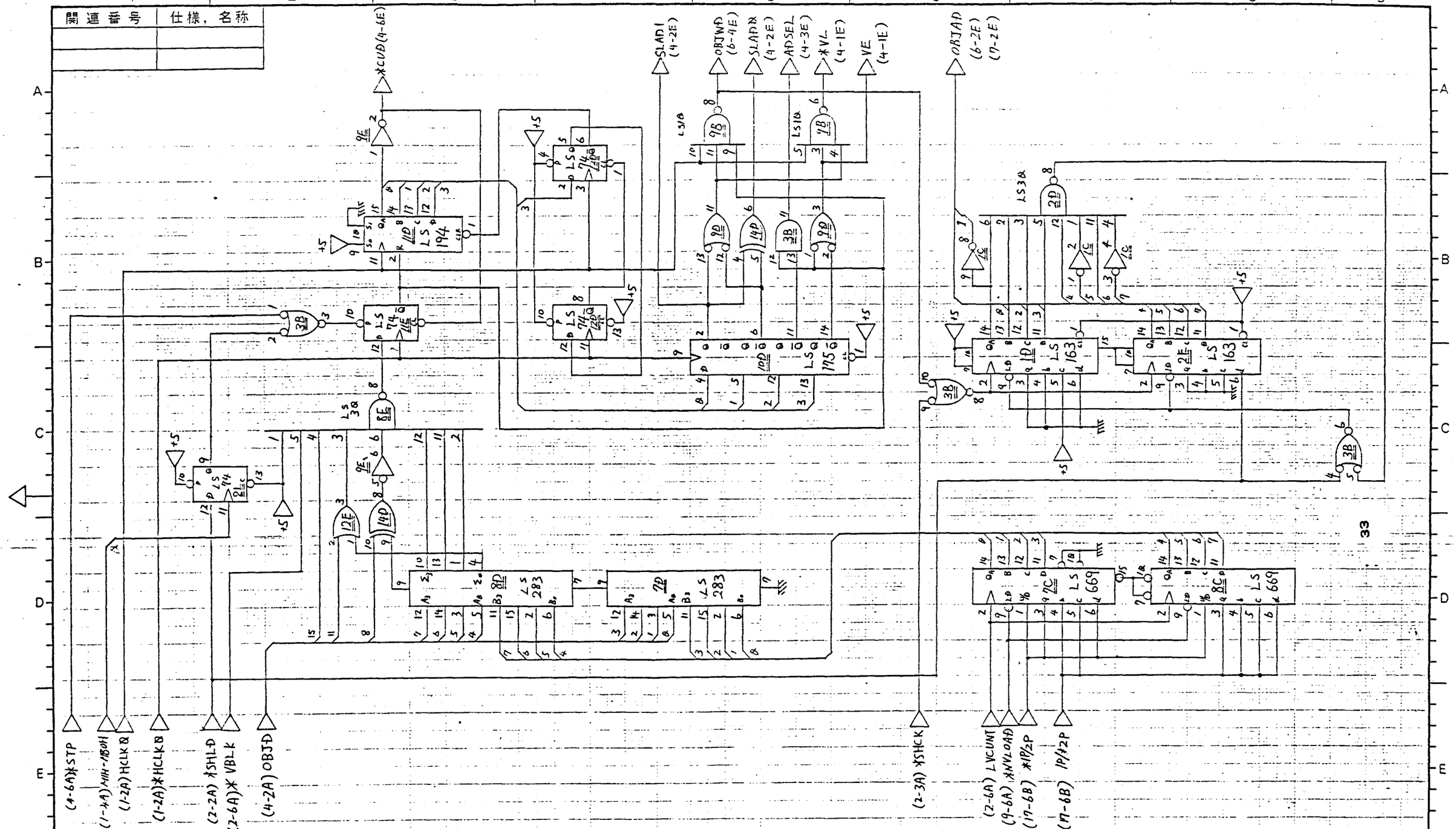

記号	担当	年月日	改訂個所	符号	部品，図面番号	名称	仕様，材質	個/台

記事

材質		処理		公差	名称 DNOF-81 回路図
承認	検図	検図 西川	担当 K. Hirasaki	単位 mm	図番 1K-1A223
				尺度 1/	3/17

関連番号	仕様，名称

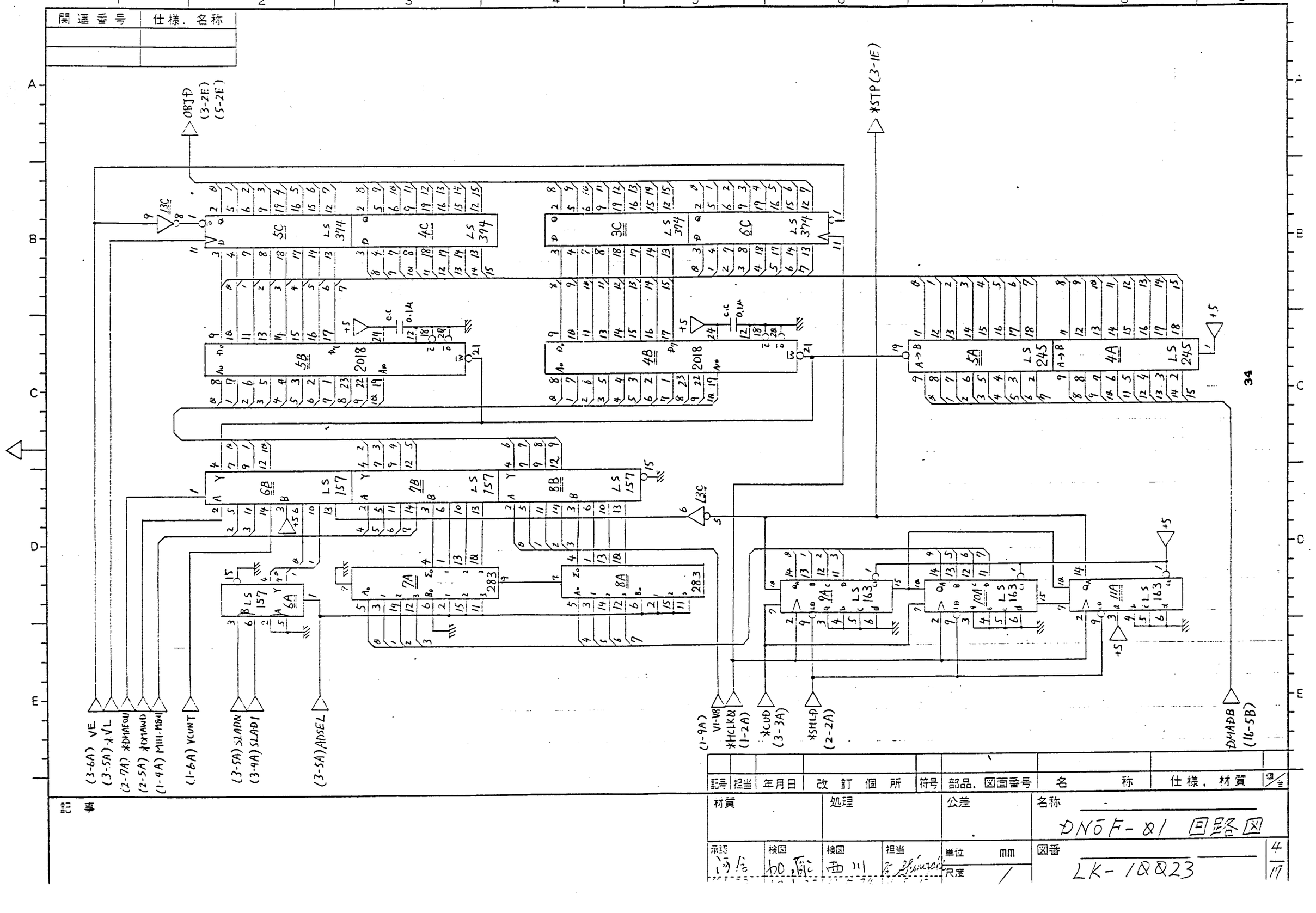

記号	担当	年月日	改訂個所	符号	部品，図面番号	名称	仕様，材質	個数

記事

材質	処理	公差	名称
			DNOF-01 回路図

承認	検図	検図	担当	単位	図番
	加藤	西川		mm	LK-1023
				尺度 1/	4/17

関連番号	仕様，名称

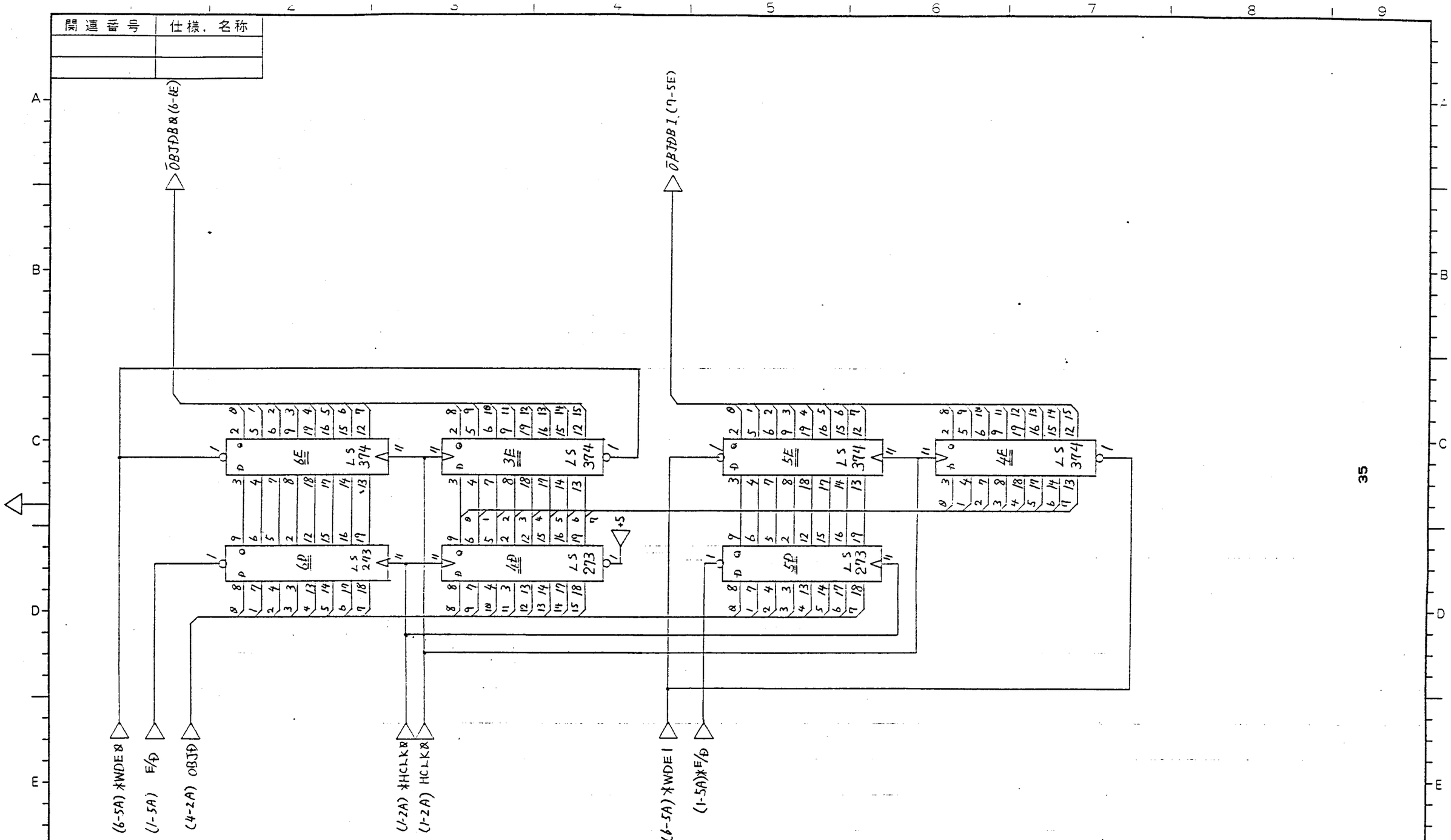

35

記号	担当	年月日	改訂個所	符号	部品，図面番号	名称	仕様，材質	個/台

記事

材質	処理	公差	名称
			DNŌF-01 回路図

承認	検図	検図	担当	単位 mm	図番
酒匂	加藤	吉川	T. Hinoraki	尺度 1/1	ZK-10023
52.12.-	52.12.3	51.5.24	51.5.13		5/17

関連番号	仕様，名称

DXF11WX(9-4E) (11-5E)
DXF1/X(10-4E) (11-6E)
*WDEX(5-1F)
+WDF/(5-4F)(11-5E)
DXF10/(12-2E)
DXF11/(12-3E)

5J LS374
6J LS374
4J LS374
3J LS374
5K 2018
4K 2018
1K LS157
2K LS157
1B LS157

(2-4A) *XFIC2
(2-5A) *XFIC6
(1-5A) *E/D
(3-6A) OBJADD
(9-8A) AXM
(1-6A) MAP
(3-5A) *OBJWD
(2-5A) *OBJCLR
(5-1A) OBJDBO
(1-5A) E/D

36

記号	担当	年月日	改訂個所	符号	部品，図面番号	名称	仕様，材質	個数

記事

材質	処理	公差	名称
			DNOF-01 回路図

承認	検図	検図	担当	単位	図番
河合	加藤	西川		mm	LK-10023
62.1.23	62.1.23	61.6.24	61.5.12	尺度 1/	

関連番号	仕様．名称

DXM88(9-4E)
DXM18(10-4E)
DXM 88(12-2E)
DXM11(12-3E)
(2-4A) *MC2
(2-5A) *MC6
(1-5A) E/D
(3-6A) OBJAB
(9-8A) AXM
(1-6A) MAP
(6-5A) *WDE-I
(5-4A) OBJDB I
(1-5A) *E/D

記号	担当	年月日	改訂個所	符号	部品．図面番号	名称	仕様．材質	個数

記事

材質	処理	公差	名称
			DNOF-XI 回路図

承認	検図	検図	担当	単位	図番	
西原	如藤	三川		mm	LK-10023	7/17
				尺度 1/		

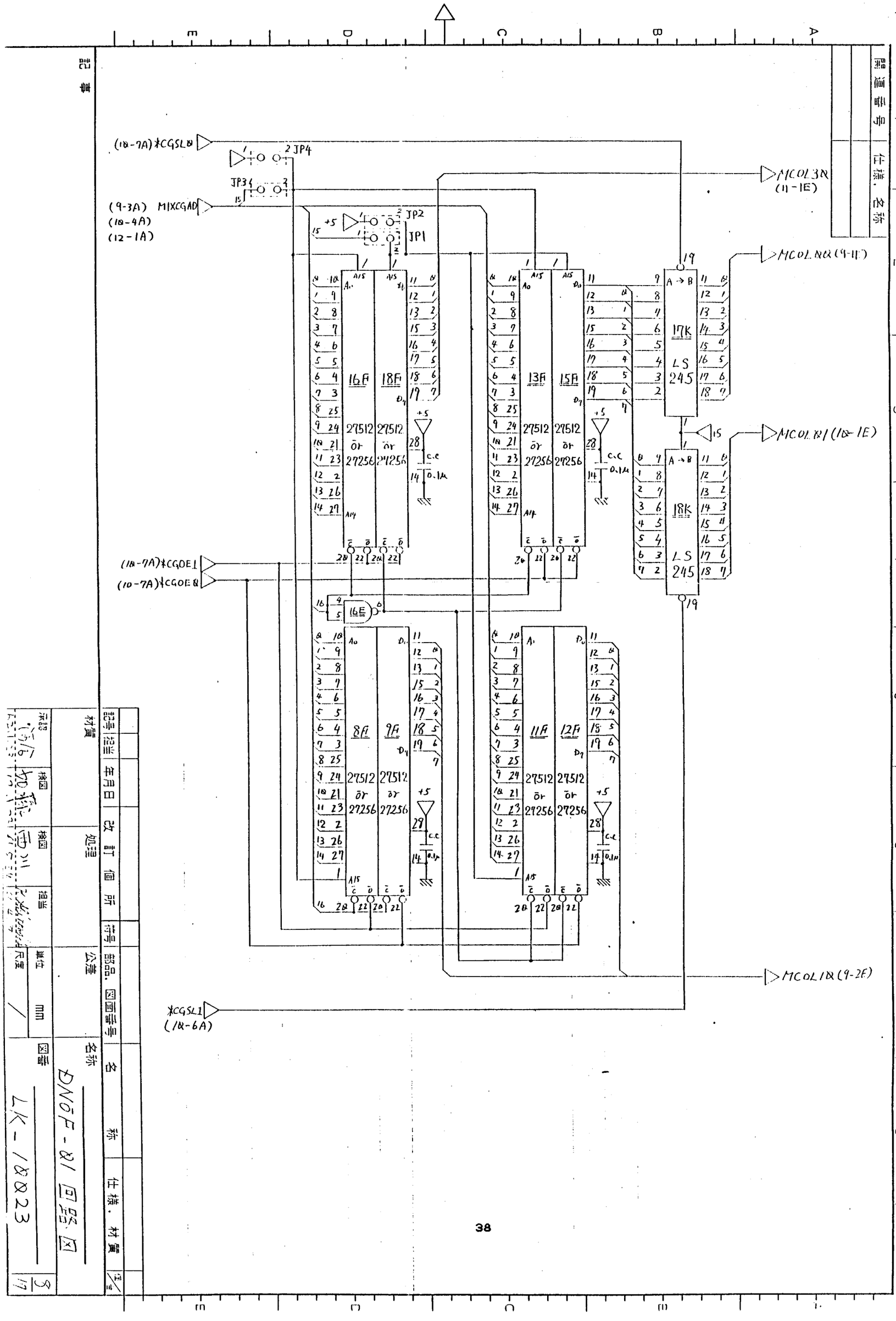
(18-7A)*CGSL0
JP4
JP3
JP2
JP1
(9-3A) MIXCGAD
(18-4A)
(12-1A)
+5
MCOL3R (11-1E)
MCOLNR (9-1E)
MCOLN1 (18-1E)
MCOL1R (9-2E)
(18-7A)*CGOE1
(10-7A)*CGOE0
*CGSL1 (18-6A)
16A
18A
13A
15A
8A
9A
11A
12A
16E
17K LS 245
18K LS 245
27512 or 27256
0.1μ
C.C

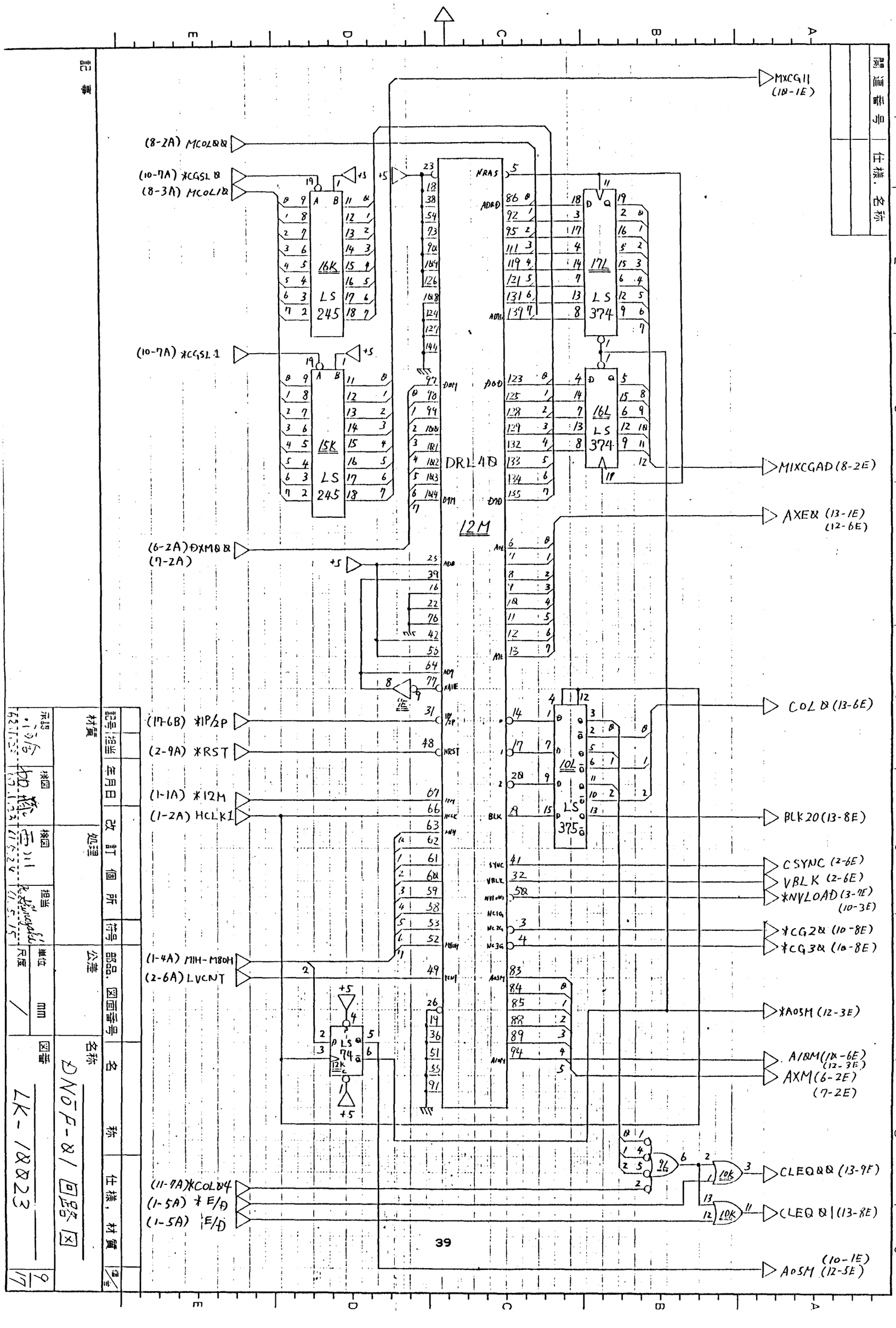
MXCG11 (18-1E)
(8-2A) MCOL0&
(10-7A) *CGSL0
(8-3A) MCOL1&
16K LS 245
(10-7A) *CGSL1
15K LS 245
DRL410
12M
17L LS 374
16L LS 374
MIXCGAD (8-2E)
AXE& (13-1E) (12-6E)
(6-2A) DXM0&
(7-2A)
COL& (13-6E)
(17-6B) *IP/2P
(2-9A) *RST
(1-1A) *12M
(1-2A) HCLK1
101 LS 375
BLK20 (13-8E)
CSYNC (2-6E)
VBLK (2-6E)
*NVLOAD (3-9E) (10-3E)
*CG2& (10-8E)
*CG3& (10-8E)
(1-4A) M1H-M8OH
(2-6A) LVCNT
LS 74
*A05M (12-3E)
A18M (18-6E) (12-3E)
AXM (6-2E) (7-2E)
96
10K
CLEQ0& (13-9F)
CLEQ0 (13-8E)
(11-7A) *COL04
(1-5A) *E/O
(1-5A) E/O
A05M (10-1E) (12-5E)
39

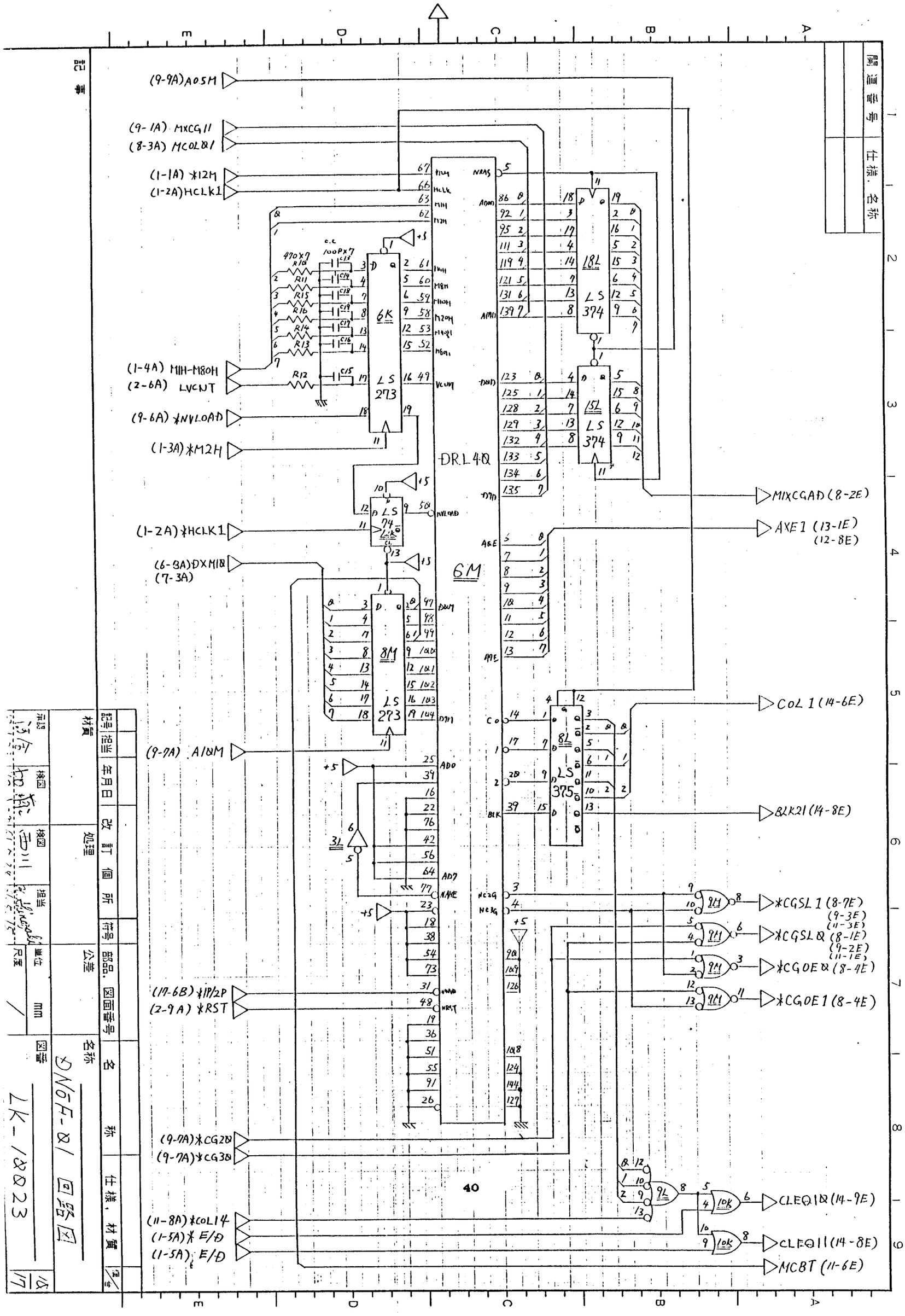

記事	関連番号	仕様・名称

記号	担当	年月日	改訂個所	符号	部品、図面番号	名称	仕様、材質	備考

材質	処理	公差	図番
検図	検図	単位 mm	LK-1880 23
検図	担当	尺度 1/1	

名称 ⑤NOF-88 回路図

作成 [illegible]

関連番号	仕様，名称

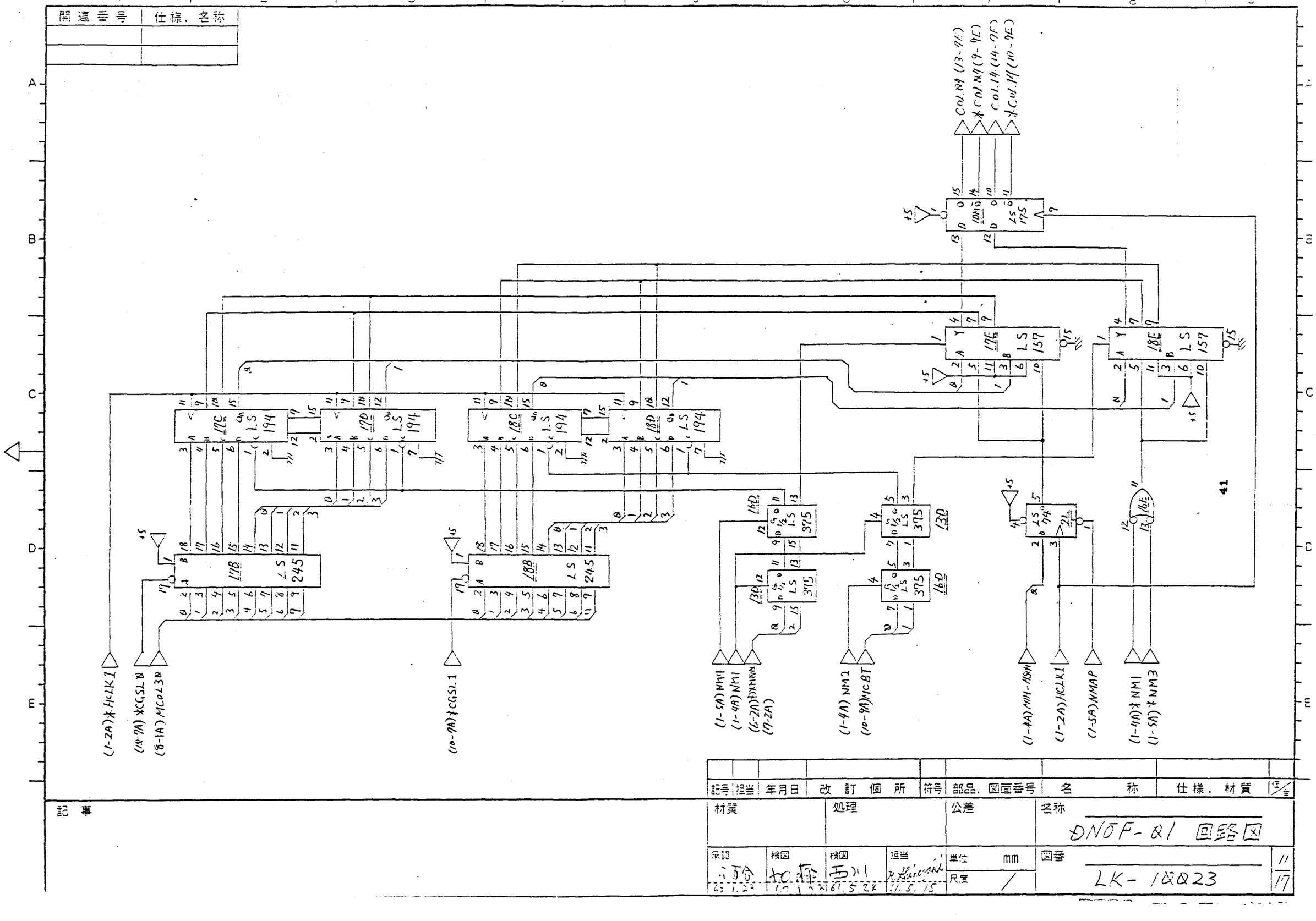

記号	担当	年月日	改訂個所	符号	部品，図面番号	名称	仕様，材質	個数

記事

材質	処理	公差	名称
			DNOF-81 回路図

承認	検図	検図	担当	単位	図番
83.1.25	83.1.27	83.5.24	83.5.25	mm	LK-10023
				尺度 1/1	11/17

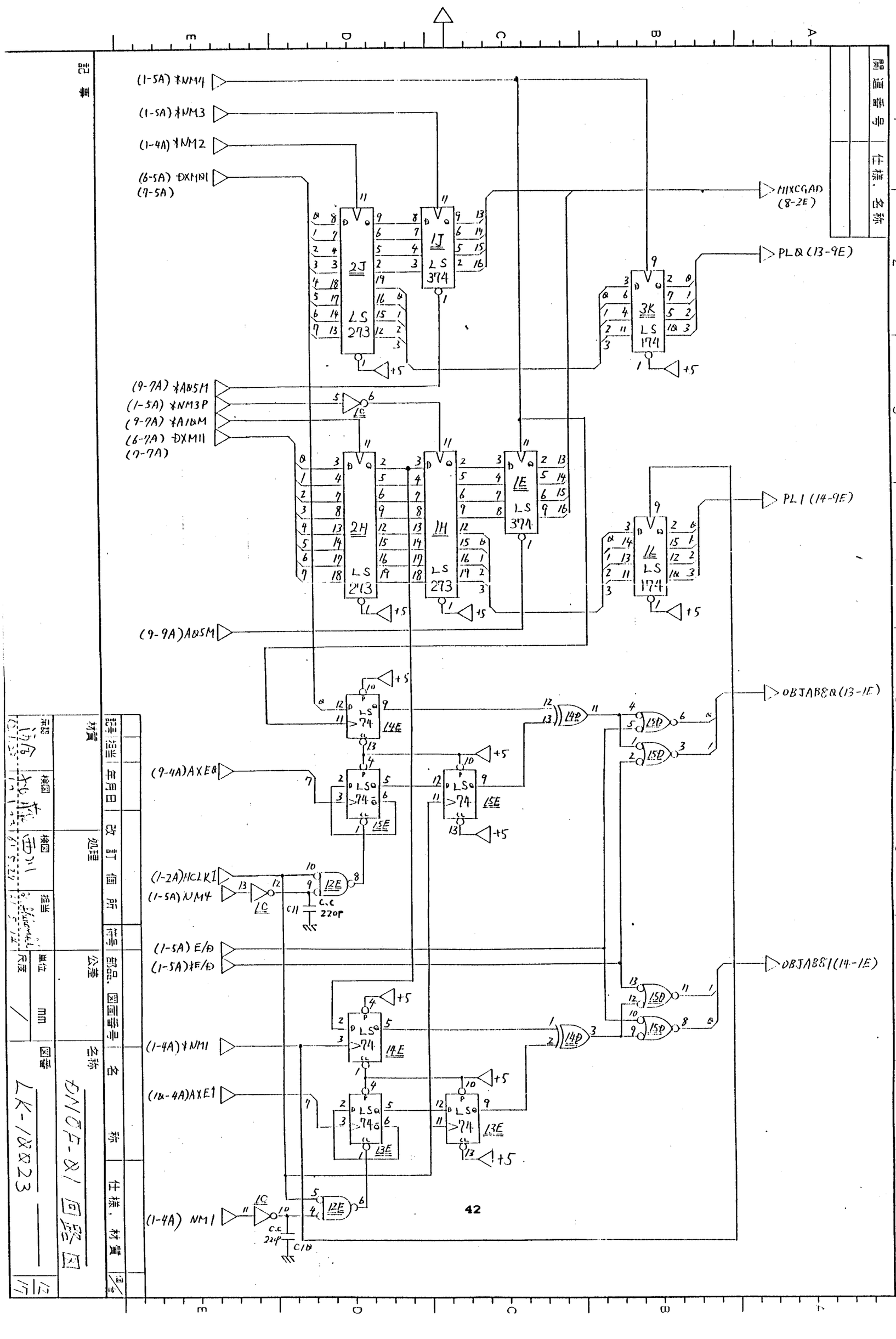
(1-5A) *NM4
(1-5A) *NM3
(1-4A) *NM2
(6-5A) DXM11
(7-5A)
MIXCGAD (8-2E)
PL&(13-9E)
2J LS 273
1J LS 374
3K LS 174
(9-7A) *AB5M
(1-5A) *NM3P
(9-7A) *A18M
(6-7A) DXM11
(7-7A)
2H LS 273
1H LS 273
1E LS 374
1L LS 174
PL1 (14-9E)
(9-9A) AB5M
OBJABE0 (13-1E)
(9-4A) AXE0
(1-2A) HCLK1
(1-5A) NM4
C11 0.01 220P
(1-5A) E/O
(1-5A) *E/O
OBJABE1 (14-1E)
(1-4A) *NM1
(1-4A) AXE1
(1-4A) NM1
C10 0.01 220P
42

回路番号	仕様，名称

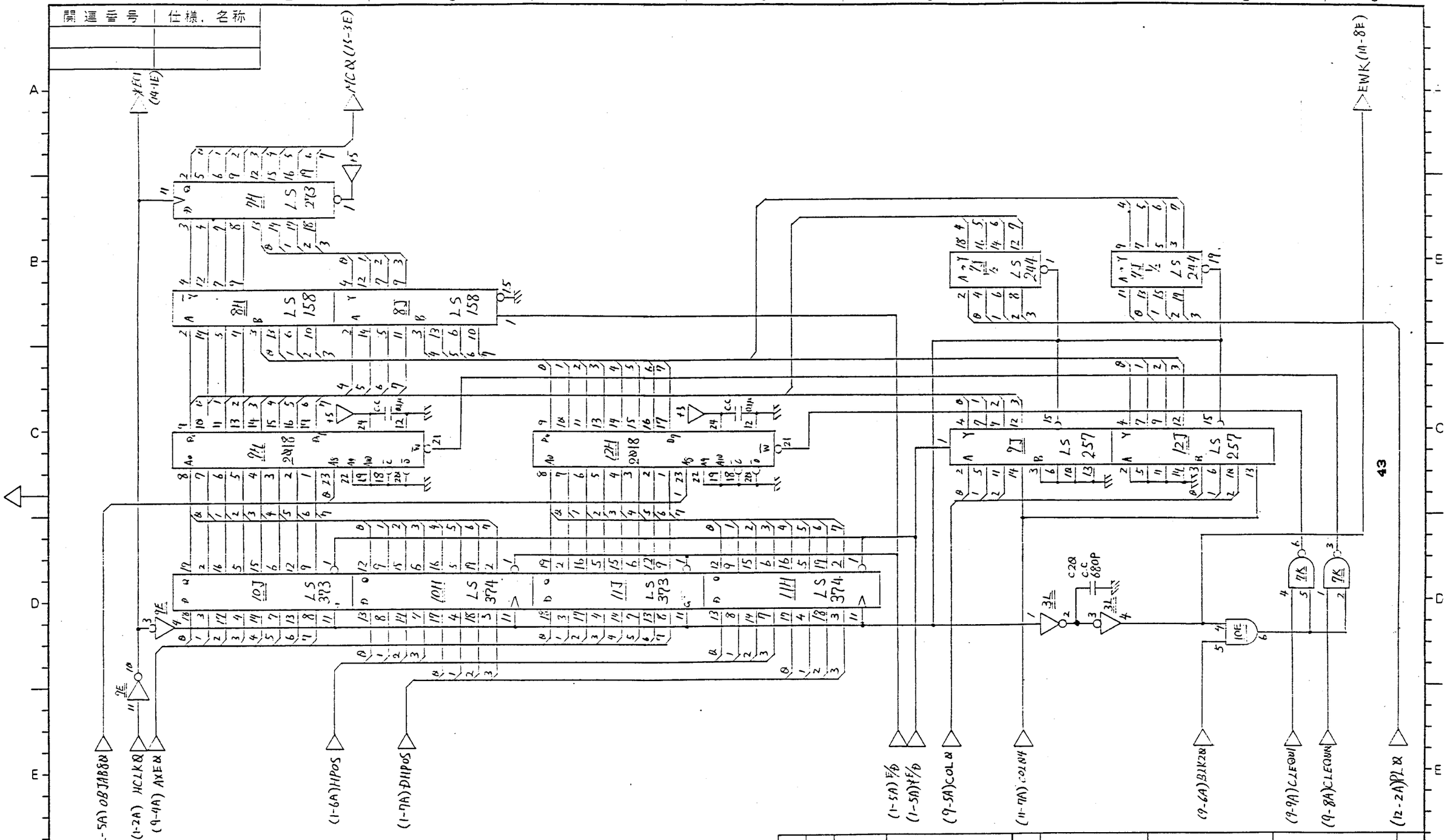

記号	担当	年月日	改訂個所	符号	部品，図面番号	名称	仕様，材質	個数

記事

材質	処理	公差	名称
			DNOF-01 回路図

承認	検図	検図	担当	単位	図番
河合	加藤	西川		mm	LK-10023
61.12.23	62.1.23	61.5.22	61.5.10	尺度 1/	12/17

関連番号	仕様、名称

>MC 1 (15-2E)

+5

13H LS 273

11H LS 158 | 14J LS 158

15

+5 0.1μ C.C 21

15H 2018

+5 0.1μ C.C 21

16H 2018

16J LS 373 | 16H LS 374 | 17J LS 373 | 17H LS 374

13E

15J LS 257 | 18J LS 257

13J ½ LS 244 | 19J ½ LS 244

7K | 7K | 7K

1NE

(12-9A) OBTABST
(13-1A) XECK
(10-4A) AXE 1
(1-6A) HPOS
(1-7A) SHPOS
(1-5A) E/D
(1-5A) E/D
(10-5A) COL 1
(11-7A) COL 14
(13-9A) EWK
(10-6A) BL K21
(10-9A) CL EQ11
(10-9A) CL EQ10
(12-4A) PL 1

44

記号	担当	年月日	改訂個所	符号	部品、図面番号	名称	仕様、材質

記事

材質	処理	公差	名称
			DNOF-X1 回路図

承認	検図	検図	担当	単位	図番
72.7.22	72.7.23	47.5.26	47.5.29	mm	LK-10023
				尺度 1/	

関連番号	仕様，名称

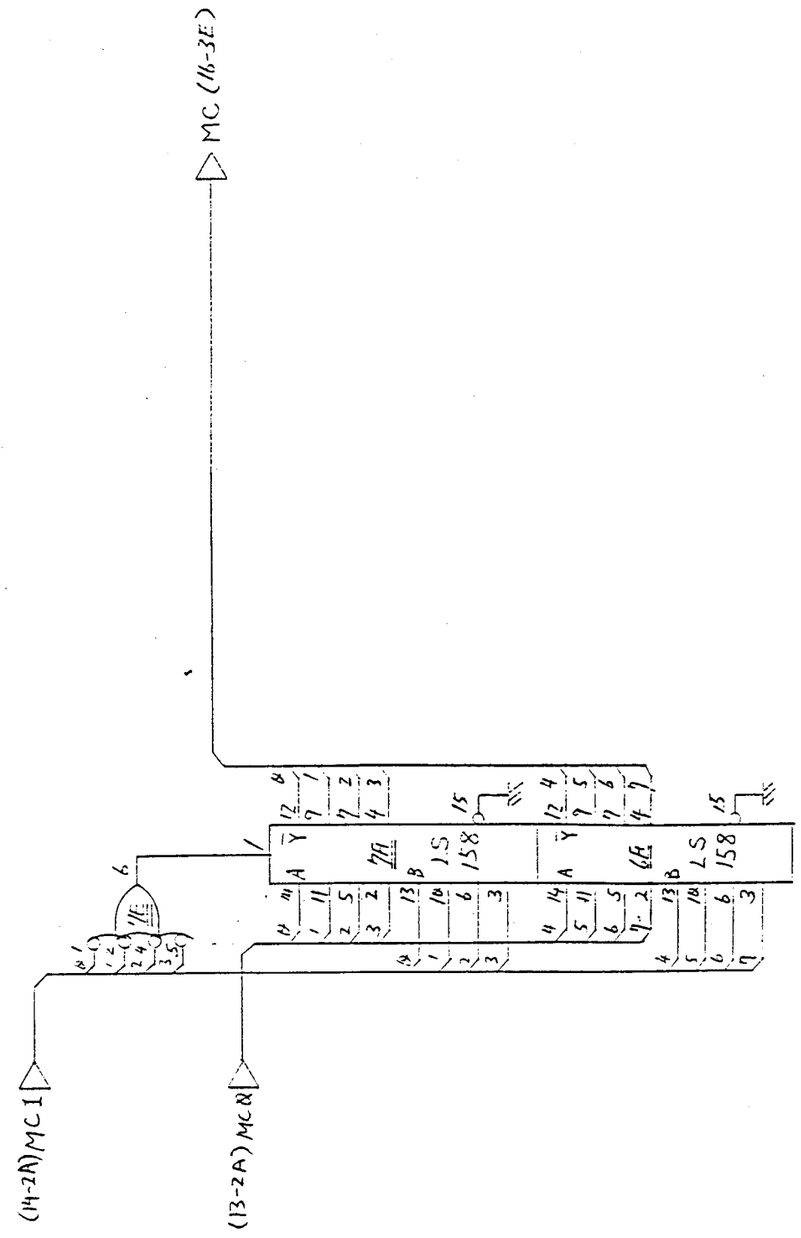

45

記事

記号	担当	年月日	改訂個所	符号	部品，図面番号	名称	仕様，材質	個数

材質		処理		公差	名称 DNOF-01 回路図
承認	検図	検図	担当	単位 mm	図番 LK-10023
頂台	加藤	西川		尺度 1/	15/17

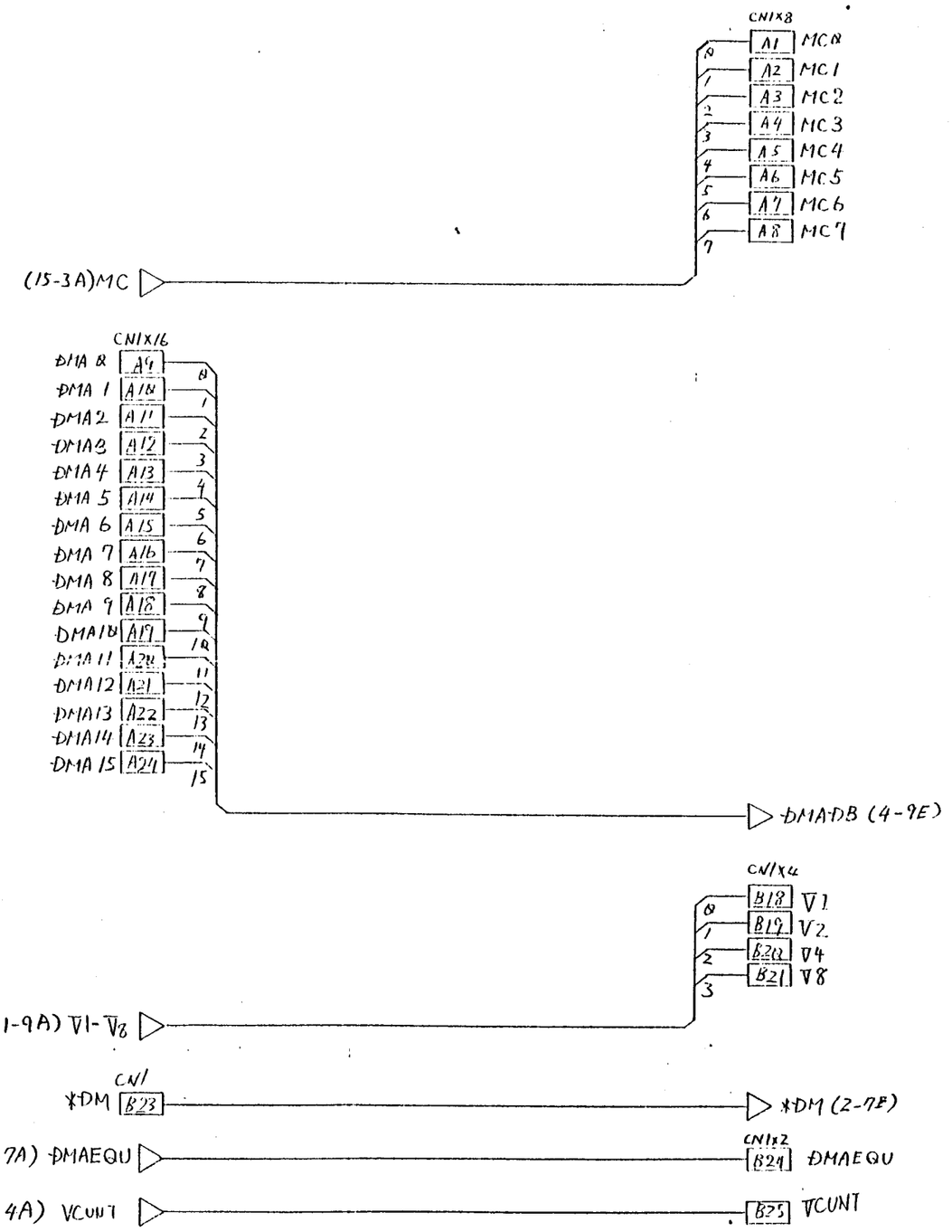

記事	材質	処理	公差	名称
承認	検図	設計	尺度 mm	DMOF-01 回路図
62.7.25	松	三ツ	/	

記号	担当	年月日	改訂個所	符号	部品、図面番号	名称	仕様、材質	記号

図番 LK-18023

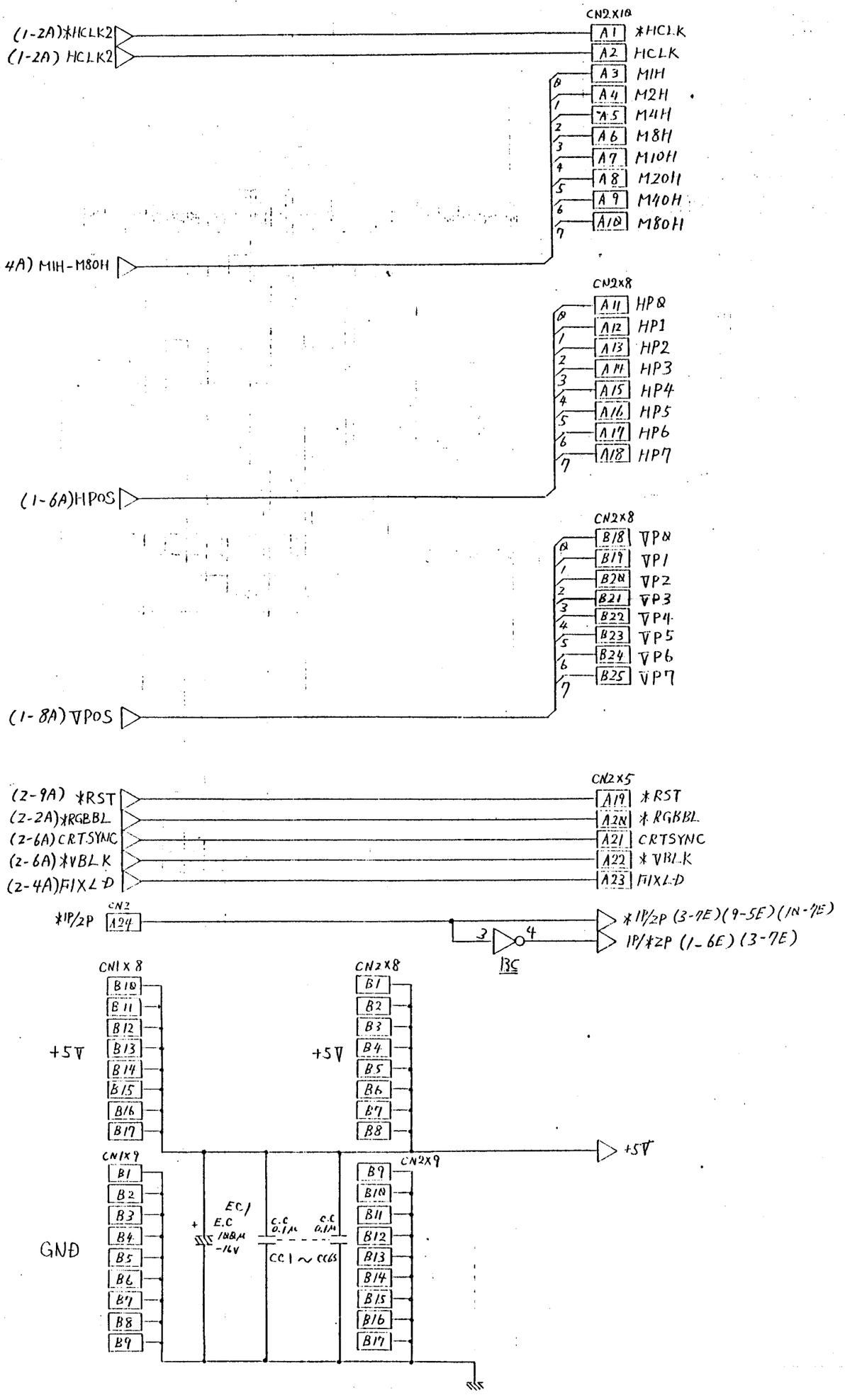

記事	材質	処理	公差	名称
尺度				DNOF-01 回路図
検図				
検図				
設計				
製作				
図番				

記号	変更	年月日	改訂	個所	作図	部品・図面番号	名称	仕様・材質	数量

関連番号	仕様・名称

K7000 COLOR MONITOR SCHEMATIC DIAGRAM

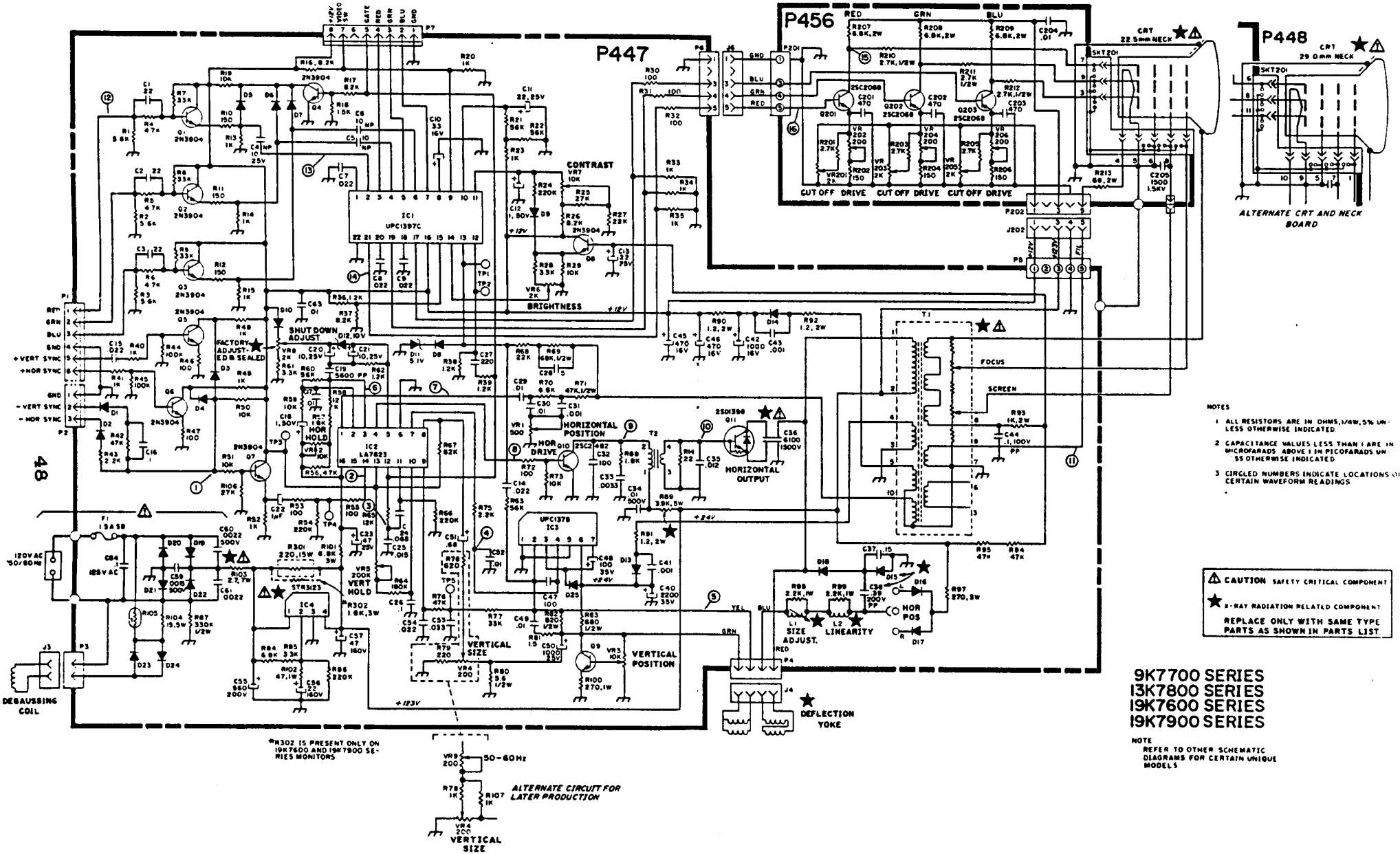

*R302 IS PRESENT ONLY ON 19K7600 AND 19K7900 SERIES MONITORS

NOTES

1. ALL RESISTORS ARE IN OHMS, 1/4W, 5% UNLESS OTHERWISE INDICATED.
2. CAPACITANCE VALUES LESS THAN 1 ARE IN MICROFARADS ABOVE 1 IN PICOFARADS UNLESS OTHERWISE INDICATED.
3. CIRCLED NUMBERS INDICATE LOCATIONS OF CERTAIN WAVEFORM READINGS.

⚠ CAUTION SAFETY CRITICAL COMPONENT

★ X-RAY RADIATION RELATED COMPONENT

REPLACE ONLY WITH SAME TYPE PARTS AS SHOWN IN PARTS LIST.

9K7700 SERIES
13K7800 SERIES
19K7600 SERIES
19K7900 SERIES

NOTE
REFER TO OTHER SCHEMATIC DIAGRAMS FOR CERTAIN UNIQUE MODELS

6. WIRING DIAGRAM

a. Control Panel.....50

b. Main Harness.....51

c. Power Supply.....52

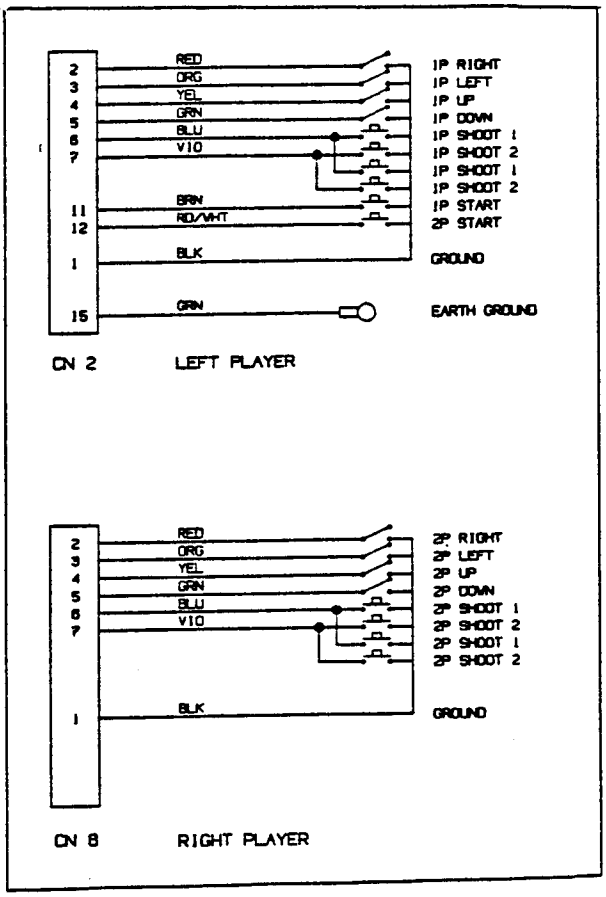

NOTE: Each joystick assembly has a 360° Rotary Switch mounted to it. The cable from each Rotary Switch must connect to the proper connector on the logic PCB (DE-0269).

The left player side connects to CN-7 on the DE-0269 PCB, and the right player side connects to CN-6.

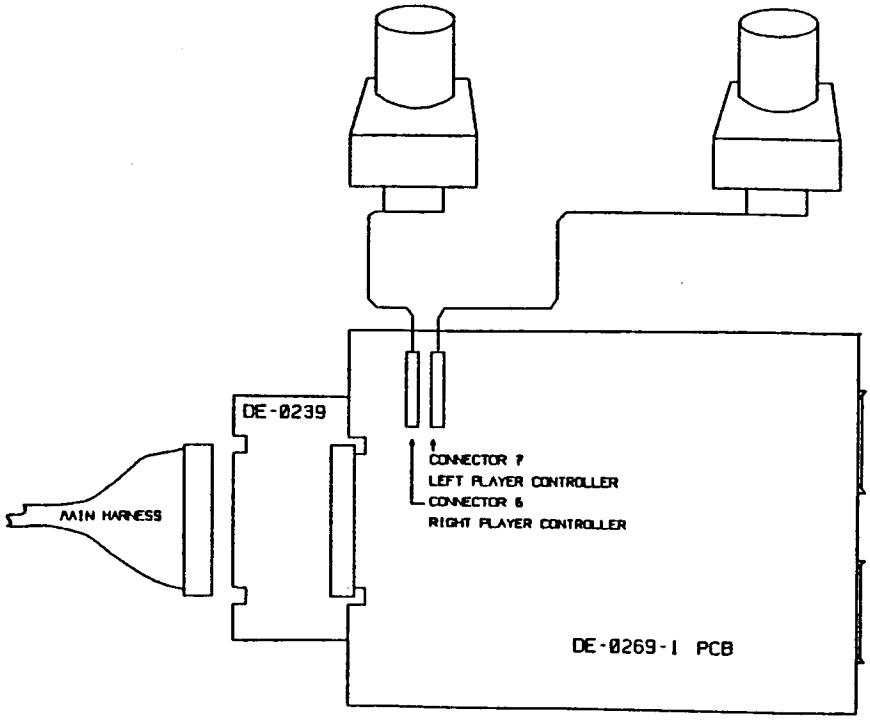

Main Harness

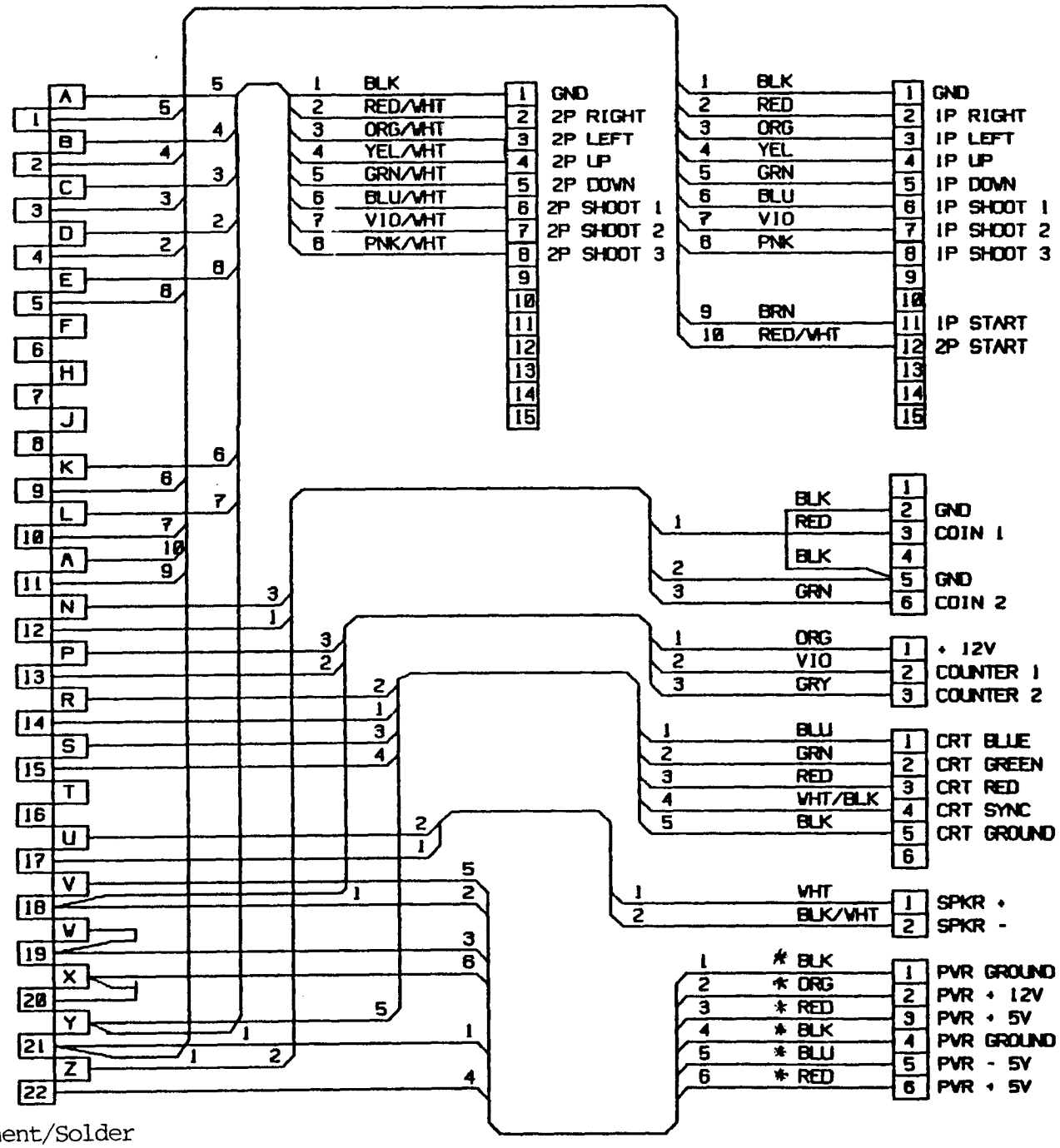

Component/Solder side

NOTE: * = 18 awg wire, all other 22 awg.

c. Power Supply

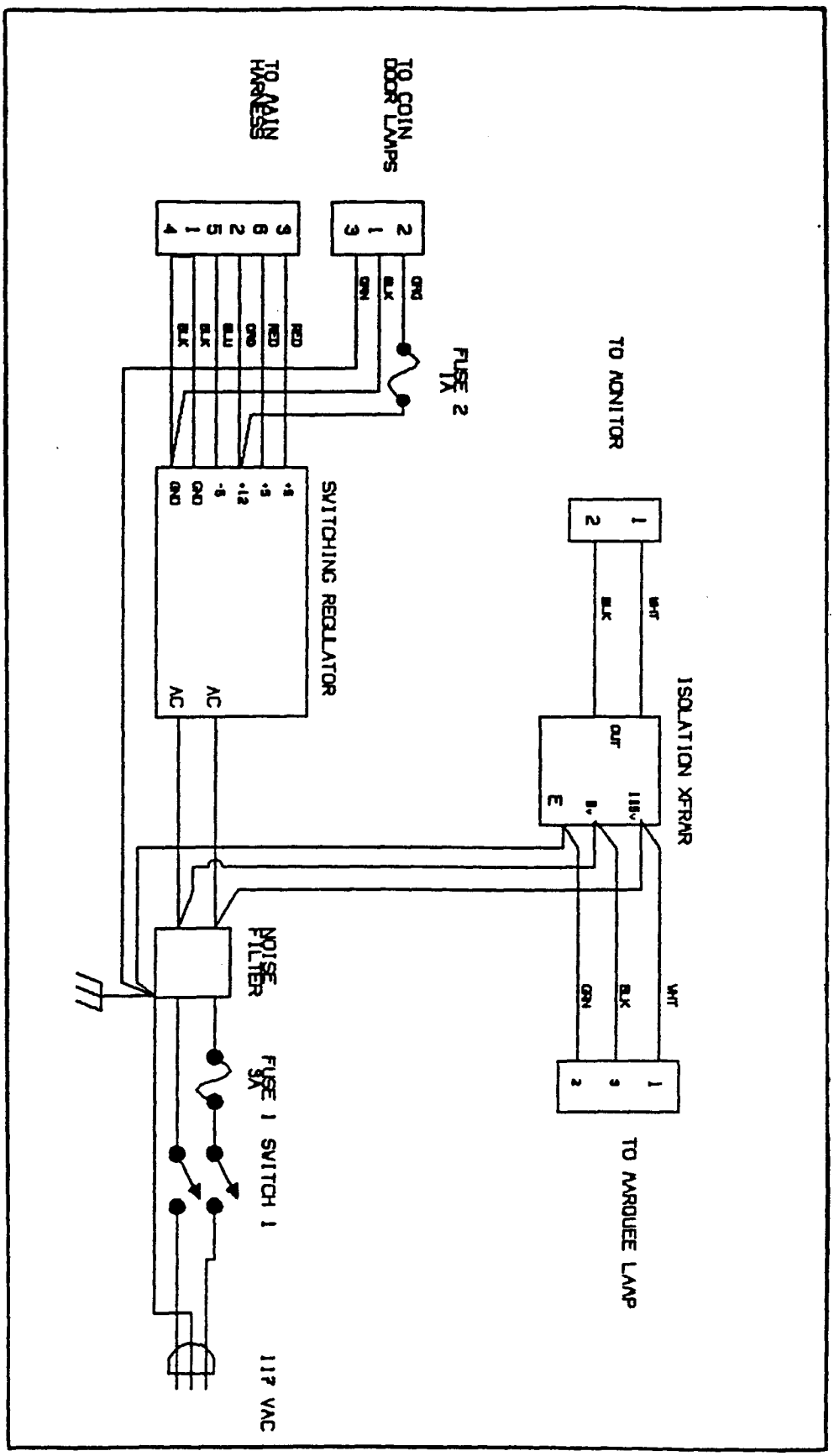

WARNING

Federal law provides severe civil and criminal penalties for the unauthorized reproduction, distribution, or exhibition of copyrighted audiovisual works and video games.

The Federal Bureau of Investigation investigates allegations of criminal copyright infringement.