ATARI®

DRAGON'S LAIR*

PRELIMINARY MANUAL

* (c) 1983 Magicom Inc. DRAGON'S LAIR TM owned by Magicom, Inc..
Manufactured under licence from Cinematronics, Inc..

VIDEO DISK PLAYER.

To ensure best quality and reliability the following simple maintenance should be performed at 2 weekly intervals.

BEFORE OPENING THE PLAYER, PLEASE NOTE THE FOLLOWING.

(a) The disk should be handled only by its edges or between the centre hole and one edge. Avoid any contact with the playing surface of the disk.

(b) DO NOT use any form of abrasive cleaner, alcohol or other solvent.

PREVENTIVE MAINTENANCE:-

1/. Open disk player drawer.

2/. Remove filter at rear of drawer.
Shake filter till free of dust.
Replace filter.

3/. Release draw latch on player securing bracket.
Remove securing bracket. (Easiest if drawer is partially in).

4/. With game powered up, press "OPEN" button on front of Player.
Within 10 seconds the lid will open automatically allowing access to the video disk.

5/. When player door is open turn power OFF at switch on rear panel of game cabinet.

6/. Carefully remove the disk and dust it with a clean, lint-free, 100% cotton cloth.
If necessary, the cloth may be dampened slightly with water.
DO NOT use any form of abrasive cleaner, alcohol or other solvent.

7/. With playing surface facing downwards, replace disk and press it gently onto centre spindle.

8/. Close lid of player.

9/. Replace securing bracket.

10/. Gently close and secure drawer.

11/. Turn power ON.

2.0 INTERFACE

2.1 INTRODUCTION

The IVDBC is intended for use in a variety of configurations. Therefore, not all of the interfaces described here would be used in a specific application.

2.2 CIRCUIT BOARD CONNECTORS

Reference Designator	Description	Mating Connector
J1	36-Pin Control Panel inputs, coin acceptor switch inputs, coin counter outputs, DC power input, audio input, volume control and audio output	Molex Shell Order #03-06-1362 Molex Pin Model #4529 or #4559 (female)
J2	6-Pin serial, video disc player interface - serial send, receive and handshaking	Molex Shell Order #03-09-2062 Molex Pin Model #1190, 1380, 2870 or 1434 (male)
J3	24-Pin Parallel video disc player interface, - 8-bit data and handshaking.	Amphenol Type 24
J4	Composite video input from video disc player	BNC
J5	6-Pin RGB output to monitor	Molex Shell Order #03-09-1063 Molex Pin Model #1189,1381,2871 or

2.2 CIRCUIT BOARD CONNECTORS (cont'd)

Reference Designator	Description	Mating Connector
J5 (cont'd)		(Female Pin 1-5) Molex Pin Model #1190, 1380, 2870 or 1434 (Male - Pin 6 only)
J6	16-Pin General Output	16-Pin ribbon cable

2.3 CONNECTOR PINNING

Connector	Pin #	Function
J1	1	Joystick - up
	2	Joystick - down
	3	Not used
	4	+5V @ 2A supply
	5	Joystick - left
	6	Joystick - right
	7	Not used
	8	+5V @ 2A supply
	9	Right coin acceptor swit
	10	Left coin acceptor switc
	11	Not used
	12	Coin counter - right
	13	Two player start switch
	14	One player start switch
	15	Action Switch
	16	5V supply return
	17	Not used
	18	Not used
	19	Coin counter - left
	20	Ground (common)
	21	Not used
	22	Ground (common)
	23	Ground (common)
	24	Ground (common)
	25	Ground (common)
	26	Ground (common)
	27	Ground (common)
	28	Ground (common)
	29	Video disc audio input
	30	Volume control output -
	31	+25V @ 2A supply
	32	+25V @ 2A supply
	33	Speaker A-output
	34	Speaker B-output
	35	Volume control wiper -
	36	Video disc audio input-

* See Audio/Volume Control Diagram

2.3 CONNECTOR PINNING (cont'd)

Connector	Pin #	Function
J2	1	Serial data to player
	2	Signal ground
	3	DTR to disc player
	4	CTS from disc player
	5	Signal ground
	6	Serial data from player
J3	1	Data Bit 0
	2	Data Bit 1
	3	Data Bit 2
	4	Data Bit 3
	5	Not used
	6	Not used
	7	Ready
	8	Not used
	9	Not used
	10	Not used
	11	Enter
	12	Not used
	13	Data Bit 4
	14	Data Bit 5
	15	Data Bit 6
	16	Data Bit 7
	17	Int/Ext
	18	Ground
	19	Ground
	20	Ground
	21	Ground
	22	Ground
	23	Ground
	24	Ground
J4	1	Signal - composite video
	2	Ground
J5	1	Red output
	2	Ground
	3	Blue output
	4	Comp Sync output
	5	V Sync output
	6	Green output
J6	1	Data Bit 3
	2	Data Bit 2
	3	Data Bit 1
	4	Data Bit 0
	5	Address Bit 2
	6	Address Bit 1
	7	Address Bit 0
	8	Decoding Bit 2
	9	Decoding Bit 1
	10	Not used
	11	+5V output
	12	+5V output
	13	+5V output
	14	Ground
	15	Ground
	16	Ground

2.4 VOLUME CONTROL SCHEME

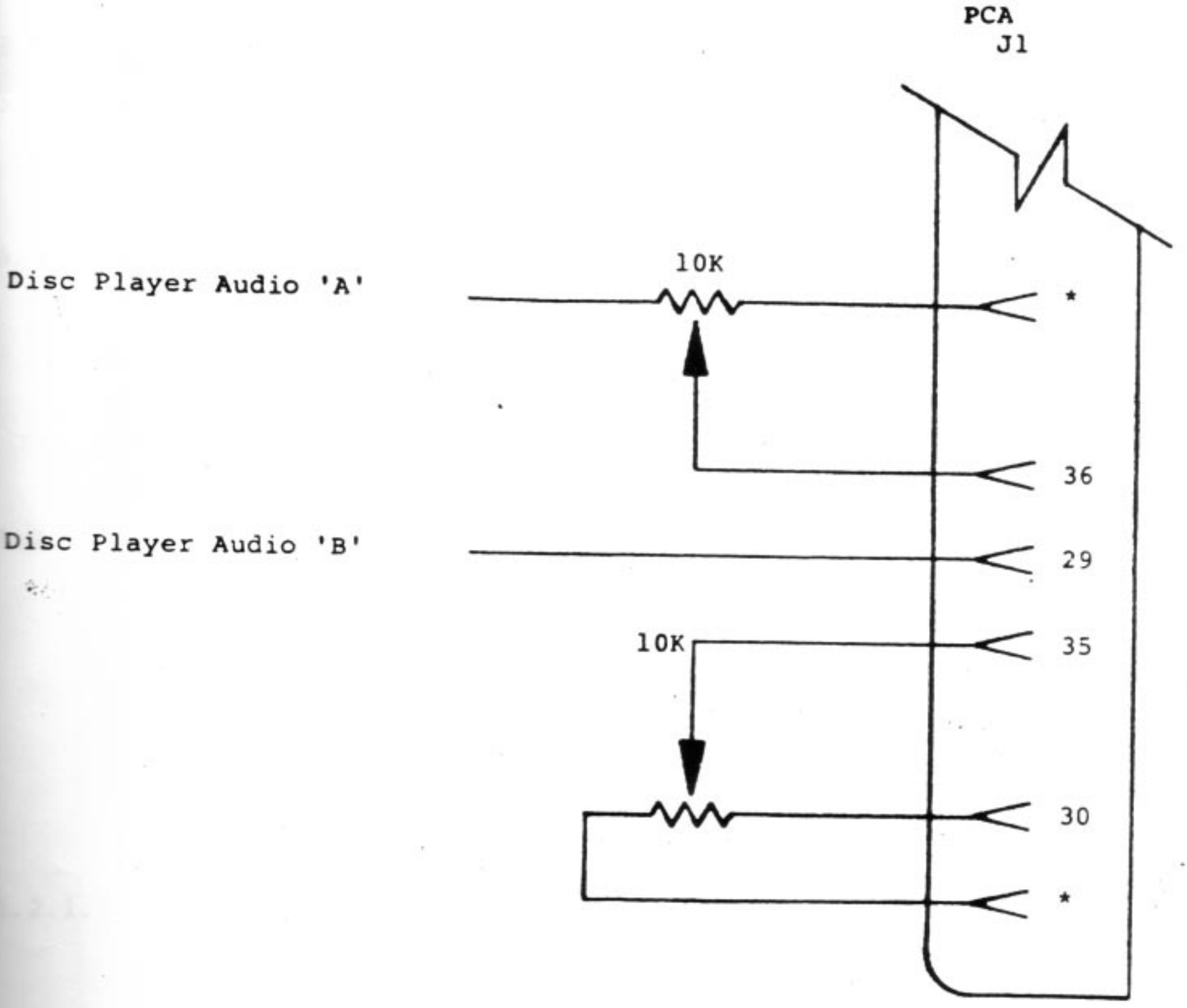

* Any ground (common)

SIZE A	DRAWING NUMBER	
SCALE		SHEET

2.5 Power Supply Requirements

Two voltages are required:
+5VDC @ 2 amps regulated ±5%
+25VDC @ 1.5 amps unregulated

3.0 SYSTEM OPERATION

3.1 Initialization

The system is initialized whenever power is cycled or the reset switch (S1) is depressed.

3.2 Options

Two banks of eight switches each, SWA and SWB are used to select various coinage and game play options. These switches are read only immediately after system reset. Modifying the switch settings has no effect until system reset occurs.

3.2.1 Coinage/Credit Options

Two independent coin acceptor switch/coin counter combinations have been provided for coin/credit ratios which are determined for the left and right coin acceptors by SWA and SWB respectively. Program logic requires that the number of coins for a slot be detected before credits are incremented. Credits are incremented by the amount selected.

3.2.1.1 Left Slot

Coins:

SWA-1	SWA-2	SWA-3		
Off	Off	Off	=	Freeplay
On	Off	Off	=	1 coin
Off	On	Off	=	2 coins
On	On	Off	=	3 coins
Off	Off	On	=	4 coins
On	Off	On	=	5 coins
Off	On	On	=	6 coins
On	On	On	=	7 coins

3.2.1.1 Left Slot (cont'd)

Credits:

SWA-4	SWA-5	
Off	Off	= slot disabled
On	Off	= 1 credit
Off	On	= 2 credits
On	On	= 3 credits

Attract Mode Audio:

SWA-6	
Off	= Disabled
On	= Enabled

3.2.1.2 Right Slot

Coins:

SWB-1	SWB-2	SWB-3	
Off	Off	Off	= Freeplay
On	Off	Off	= 1 coin
Off	On	Off	= 2 coins
On	On	Off	= 3 coins
Off	Off	On	= 4 coins
On	Off	On	= 5 coins
Off	On	On	= 6 coins
On	On	On	= 7 coins

Credits:

SWB-4	SWB-5	SWB-6	
Off	Off	Off	= slot disabled
On	Off	Off	= 1 credit
Off	On	Off	= 2 credits
On	On	Off	= 3 credits
Off	Off	On	= 4 credits
On	Off	On	= 5 credits
Off	On	On	= 6 credits
On	On	On	= 7 credits

3.2.2 Lives per Game

SWB-7	
Off	3 lives per game
On	5 lives per game

3.2.3 Difficulty

SWA-7	SWA-8	
Off	Off	Easy **
On	Off	Intermediate
Off	On	Hard
On	On	Very hard

** Atari recommended setting.

4.3 DIAGNOSTICS

LED display DS1 is used as an indicator for diagnostics. The following tests are performed:

1 - CPU Test
Check that Registers A, BC, DE, and HL can hold data.

2 - ROM Test
Compute checksum of all proms and compare to expected checksum.

3 - RAM Test
Write various bit patterns to RAM and read back to verify.

4 - Display Memory Test
Check display memory the same way RAM memory was checked.

5 - CTC Test
Verify all channels can be written and read.

When there is a diagnostic failure, the display will freeze with the number of the test which failed. A "P" will be displayed if all tests pass. Diagnostics will automatically run at power-up and may be run manually by closing the diagnostic switch (J1, Pin 3).

During normal game play, DS1 and DS2 are blank, but their decimal points are driven by the 10 msec and 5 msec system interrupts and will flicker accordingly.

'Eurolair' Option Switch Diagram

Left Slot Coins:

SWA-1	SWA-2	SWA-3	
Off	Off	Off	= freeplay
On	Off	Off	= 1 coin
Off	On	Off	= 2 coins
On	On	Off	= 3 coins
Off	Off	On	= 4 coins
On	Off	On	= 5 coins
Off	On	On	= 6 coins
On	On	On	= 7 coins

Left Slot Credits:

SWA-4	SWA-5	
Off	Off	= slot disabled
On	Off	= 1 credit
Off	On	= 2 credits
On	On	= 3 credits

Attract Mode Audio:

SWA-6

Off	=	Disabled
On	=	Enabled

Game Difficulty Level:

SWA-7	SWA-8		
Off	Off	=	Easy
On	Off	=	Intermediate
Off	On	=	Hard
On	On	=	Very Hard

* Difficulty shifts to the next higher level after surviving 5 consecutive rooms

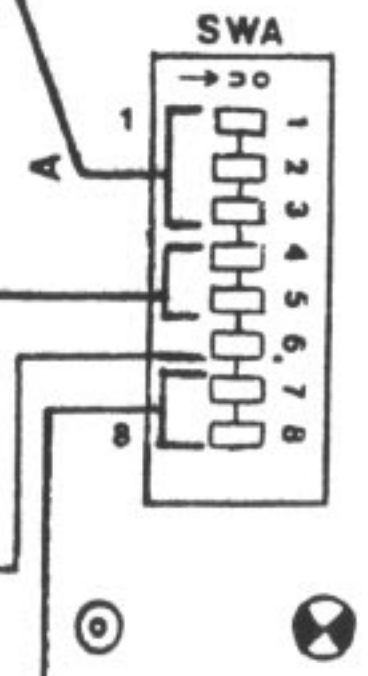

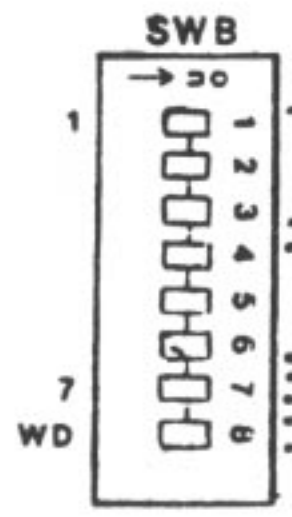

Right Slot Coins:

SWB-1	SWB-2	SWB-3	
Off	Off	Off	= freeplay
On	Off	Off	= 1 coin
Off	On	Off	= 2 coins
On	On	Off	= 3 coins
Off	Off	On	= 4 coins
On	Off	On	= 5 coins
Off	On	On	= 6 coins
On	On	On	= 7 coins

Right Slot Credits

SWB-4	SWB-5	SWB-6	
Off	Off	Off	= slot disabled
On	Off	Off	= 1 credit
Off	On	Off	= 2 credits
On	On	Off	= 3 credits
Off	Off	On	= 4 credits
On	Off	On	= 5 credits
Off	On	On	= 6 credits
On	On	On	= 7 credits

Lives Per Game:

SWB-7

Off = 3 lives per game
On = 5 lives per game

Watchdog Timer Enable:

SWB-8

On = Enable Watchdog Timer

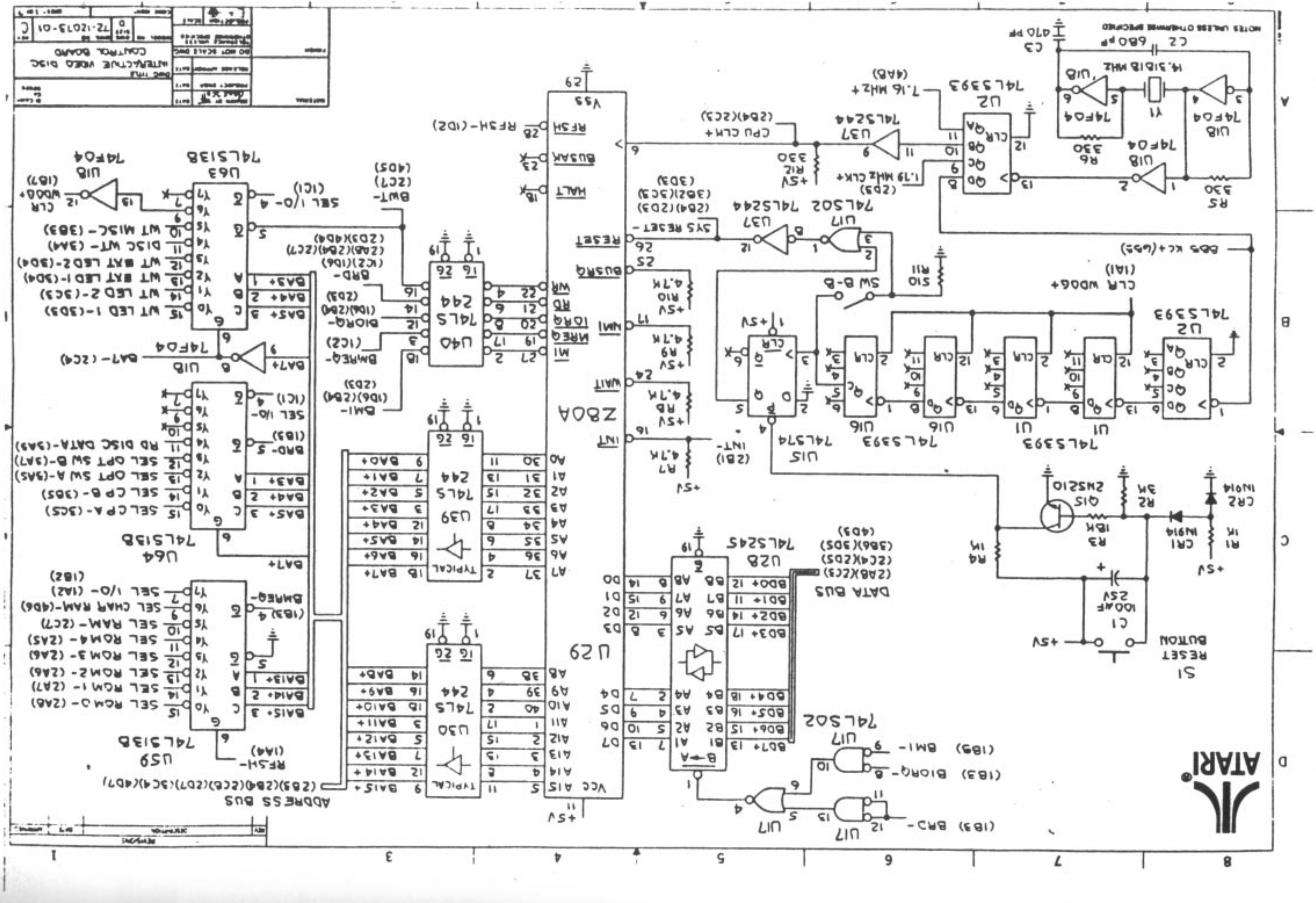
Z80A
U29
U40
74LS244
U30
74LS244
U39
74LS244
U28
74LS245
U64
74LS138
U63
74LS138
U59
74LS138
U17
74LS02
U15
74LS74
U16
74LS393
U1
74LS393
U2
74LS393
U37
74LS244
U2
74LS393
U37
74LS244
U17
74LS02
U17
74LS02
U1B
74F04
U1B
74F04
74F04
U1B
74F04
U1B
74F04
Y1
14.31818 MHz
Q1S
2N5210
CR1
IN914
CR2
IN914
S1
RESET BUTTON
C1
100MF
25V
C2
680 PF
C3
470 PF
R1
1K
R2
3M
R3
18K
R4
1M
R5
330
R6
330
R7
4.7K
R8
4.7K
R9
4.7K
R10
4.7K
R11
510
SW B-B
1.79 MHz CLK+
7.16 MHz+
(4AB)
CPU CLK+
(2B4)(2C3)
+5V
RESET
HALT
BUSAK
RFSH
BUSRQ
WAIT
INT
NMI
MREQ
IORQ
RD
WR
M1
RFSH-(1D2)
INT-
(2B1)
BUS RQ-
BUS AK-
SYS RESET-
(2B4)(2D3)
(3B2)(3C3)
(3D3)
BWT-
(4D5)
SEL I/O- 4
(1C1)
BRD-
(1C2)
(2B6)(2C6)(2C7)
(2D3)(4D4)
BMREQ-
(1C2)
BMI-
(1D6)(2B4)
(2D3)
BIORQ-
(1D6)(2B6)
(2D3)
ADDRESS BUS
(2B3)(2B4)(2C6)(2C7)(3C4)(4D7)
DATA BUS
(2A8X2C3)
(2C4X2D5)
(3B6)(3D5)
(4D3)
BD0+
BD1+
BD2+
BD3+
BD4+
BD5+
BD6+
BD7+
BA0+
BA1+
BA2+
BA3+
BA4+
BA5+
BA6+
BA7+
BA8+
BA9+
BA10+
BA11+
BA12+
BA13+
BA14+
BA15+
BA7+
BA7-
(1D7)
BD5 KC+(U55)
CLR WDOG+
(1A1)
SEL I/O- 4
(1C1)
SEL I/O-
(1B3)
BRD- 5
(1B3)
RD DISC DATA-(3A3)
SEL OPT SW A-(3A5)
SEL OPT SW B-(3A7)
SEL CP A-(3C5)
SEL CP B-(3D5)
SEL I/O- (1A2)
SEL CHAR RAM-(4D6)
SEL RAM- (2C7)
SEL ROM4- (2A5)
SEL ROM3- (2A6)
SEL ROM2- (2A7)
SEL ROM1- (2A7)
SEL ROM0- (2A8)
WT LED 1-(3D3)
WT LED 2-(3C3)
WT BKT LED 1-(3D4)
WT BKT LED 2-(3D4)
DISC WT- (3A4)
WT MISC- (3B3)
CLR WDOG+ (1B7)
RFSH-
(1A4)
BMREQ-
(1B3)
BMI- (1B5)
BIORQ- (1B3)
BRD- (1B3)
ATARI
INTERACTIVE VIDEO DISC CONTROL BOARD
72-12013-01
A
B
C
D

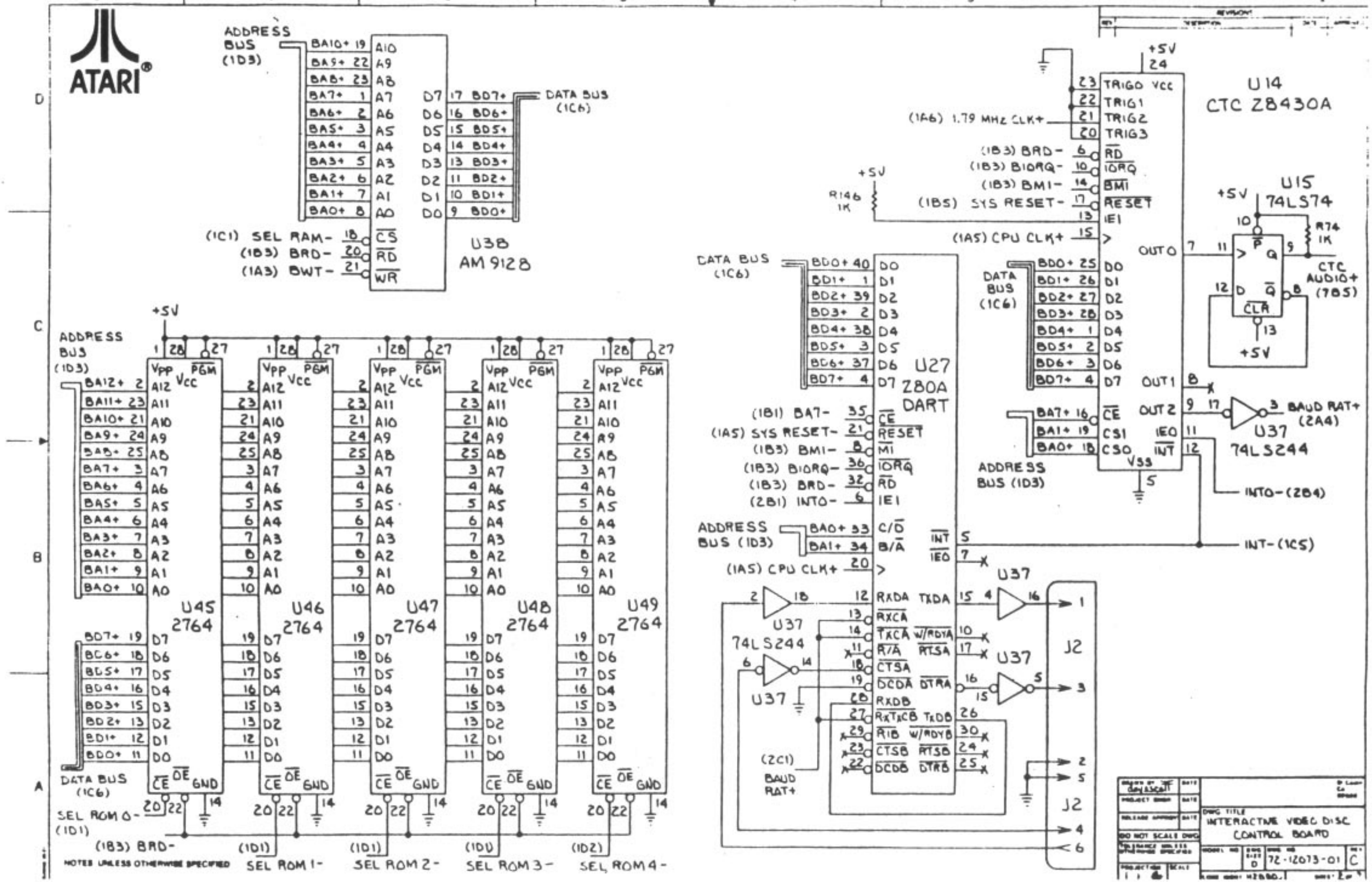
ATARI
ADDRESS BUS (1D3)
DATA BUS (1C6)
U38 AM9128
(1C1) SEL RAM-
(1B3) BRD-
(1A3) BWT-
+5V
U45 2764
U46 2764
U47 2764
U48 2764
U49 2764
SEL ROM 0- (1D1)
SEL ROM 1- (1D1)
SEL ROM 2- (1D1)
SEL ROM 3- (1D1)
SEL ROM 4- (1D2)
NOTES UNLESS OTHERWISE SPECIFIED
U14 CTC Z8430A
(1A6) 1.79 MHz CLK+
R146 1K
(1B3) BRD-
(1B3) BIORQ-
(1B3) BMI-
(1B5) SYS RESET-
(1A5) CPU CLK+
U15 74LS74
R74 1K
CTC AUDIO+ (7D5)
OUT0
OUT1
OUT2
BAUD RAT+ (2A4)
U37 74LS244
INT0- (2B4)
INT- (1C5)
U27 Z80A DART
(1B1) BA7-
(1A5) SYS RESET-
(1B3) BMI-
(1B3) BIORQ-
(1B3) BRD-
(2B1) INT0-
ADDRESS BUS (1D3)
(1A5) CPU CLK+
(2C1) BAUD RAT+
J2
INTERACTIVE VIDEO DISC CONTROL BOARD
72-12073-01
C

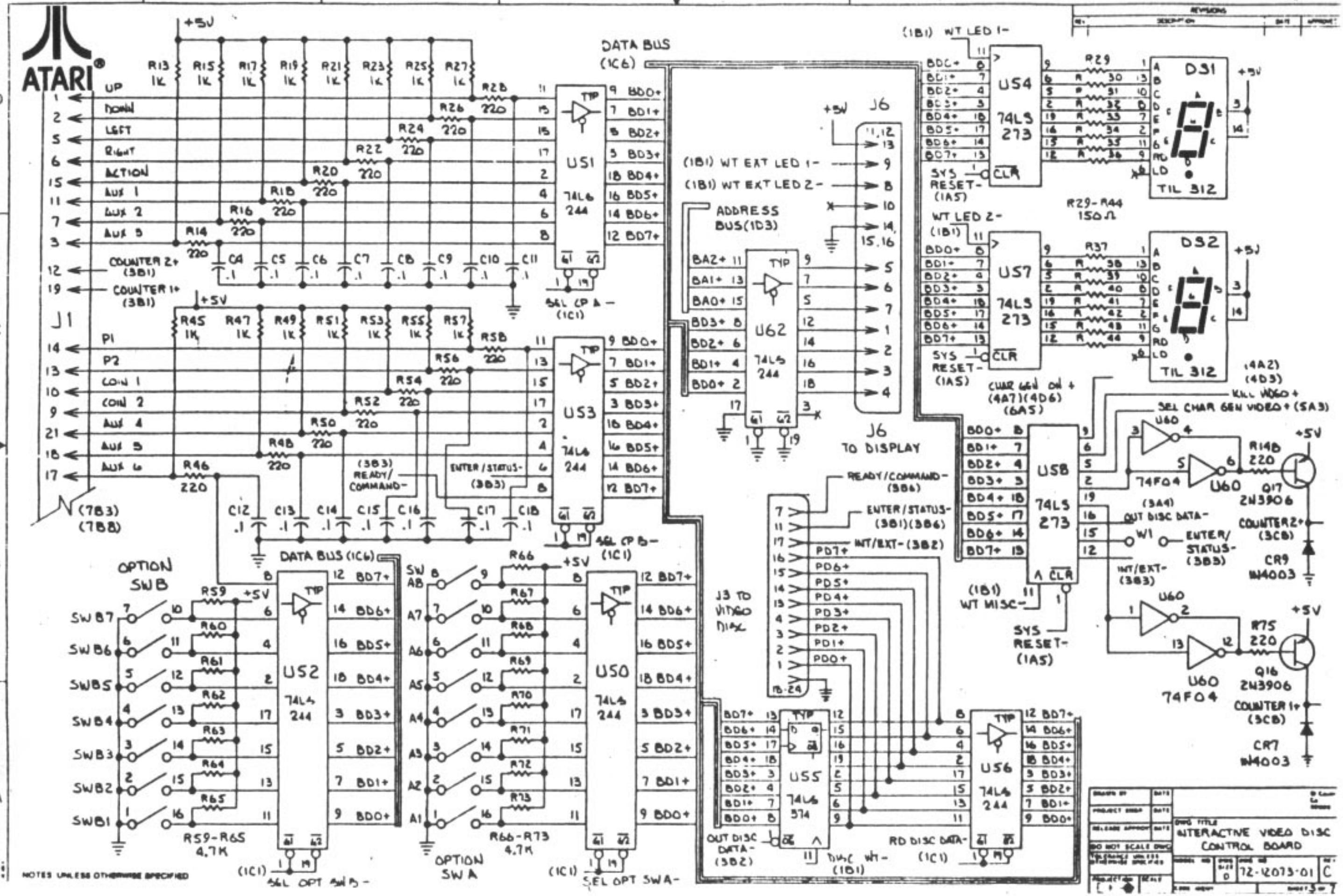
ATARI
DATA BUS (1C6)
J1
UP
DOWN
LEFT
RIGHT
ACTION
AUX 1
AUX 2
AUX 3
COUNTER 2+ (3B1)
COUNTER 1+ (3B1)
P1
P2
COIN 1
COIN 2
AUX 4
AUX 5
AUX 6
(7B3) (7B8)
U51 74LS 244
U53 74LS 244
U52 74LS 244
U50 74LS 244
U55 74LS 374
U56 74LS 244
U62 74LS 244
U54 74LS 273
U57 74LS 273
U58 74LS 273
DS1
DS2
TIL 312
R29-R44 150Ω
J6
J6 TO DISPLAY
ADDRESS BUS (1D3)
(1B1) WT EXT LED 1-
(1B1) WT EXT LED 2-
(1B1) WT LED 1-
WT LED 2-
SYS RESET- (1A5)
CHAR GEN ON + (4A7)(4D6) (6A5)
KILL VIDEO + (4A2) (4D3)
SEL CHAR GEN VIDEO + (5A3)
OUT DISC DATA- (3A4)
ENTER/STATUS- (3B3)
INT/EXT- (3B3)
(1B1) WT MISC-
SYS RESET- (1A5)
COUNTER 2+ (3C8)
COUNTER 1+ (3C8)
CR9 1N4003
CR7 1N4003
Q17 2N3906
Q16 2N3906
R148 220
R75 220
U60 74F04
J3 TO VIDEO DISC
READY/COMMAND- (3B6)
ENTER/STATUS- (3B1)(3B6)
INT/EXT- (3B2)
OUT DISC DATA- (3B2)
DISC WT- (1B1)
RD DISC DATA- (1C1)
OPTION SW B
OPTION SW A
R59-R65 4.7K
R66-R73 4.7K
SEL OPT SW B-
SEL OPT SW A-
SEL CP A- (1C1)
SEL CP B- (1C1)
(3B3) READY/COMMAND-
ENTER/STATUS- (3B3)
NOTES UNLESS OTHERWISE SPECIFIED
INTERACTIVE VIDEO DISC CONTROL BOARD
72-12073-01
C

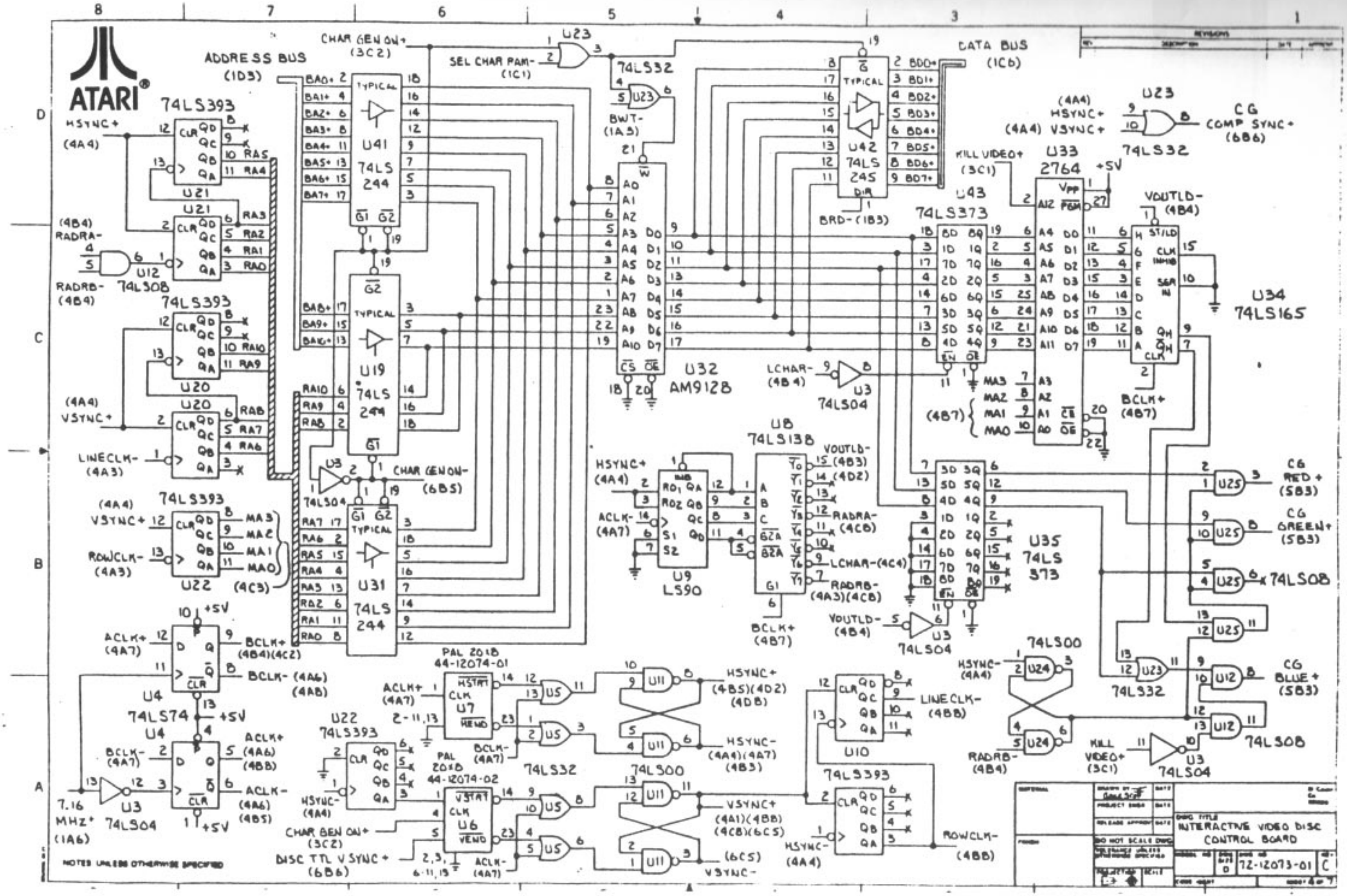
ATARI
ADDRESS BUS (1D3)
CHAR GEN ON+ (3C2)
SEL CHAR RAM- (1C1)
DATA BUS (1C6)
74LS393
74LS32
74LS08
74LS373
74LS04
74LS138
74LS74
74LS00
74LS165
U32 AM9128
U33 2764
U34 74LS165
U35 74LS 373
U9 LS90
U8 74LS138
U10
U41 74LS 244
U19 74LS 244
U31 74LS 244
U42 74LS 245
U43 74LS373
U21
U20
U22
U23
U4
U3
U12
U24
U25
U7
U6
U5
U11
PAL 20X8 44-12074-01
PAL 20X8 44-12074-02
HSYNC+ (4A4)
RADRA- (4B4)
RADRB- (4B4)
VSYNC+ (4A4)
LINECLK- (4A3)
ROWCLK- (4A3)
ACLK+ (4A7)
BCLK+ (4B4)(4C2)
BCLK- (4A6) (4A8)
ACLK+ (4A6) (4B8)
ACLK- (4A6) (4B5)
7.16 MHZ+ (1A6)
BWT- (1A3)
BRD- (1B3)
LCHAR- (4B4)
VOUTLD- (4B4)
BCLK+ (4B7)
CG COMP SYNC+ (6B6)
CG RED+ (5B3)
CG GREEN+ (5B3)
CG BLUE+ (5B3)
KILL VIDEO+ (3C1)
CHAR GEN ON- (6B5)
DISC TTL VSYNC+ (6B6)
HSYNC- (4A4)
VSYNC- (6C5)
VSYNC+ (4A1)(4B8) (4C8)(6C5)
HSYNC+ (4B5)(4D2) (4D8)
HSYNC- (4A4)(4A7) (4B3)
LINECLK- (4B8)
ROWCLK- (4B8)
NOTES UNLESS OTHERWISE SPECIFIED
DO NOT SCALE DWG
INTERACTIVE VIDEO DISC CONTROL BOARD
72-12073-01
C

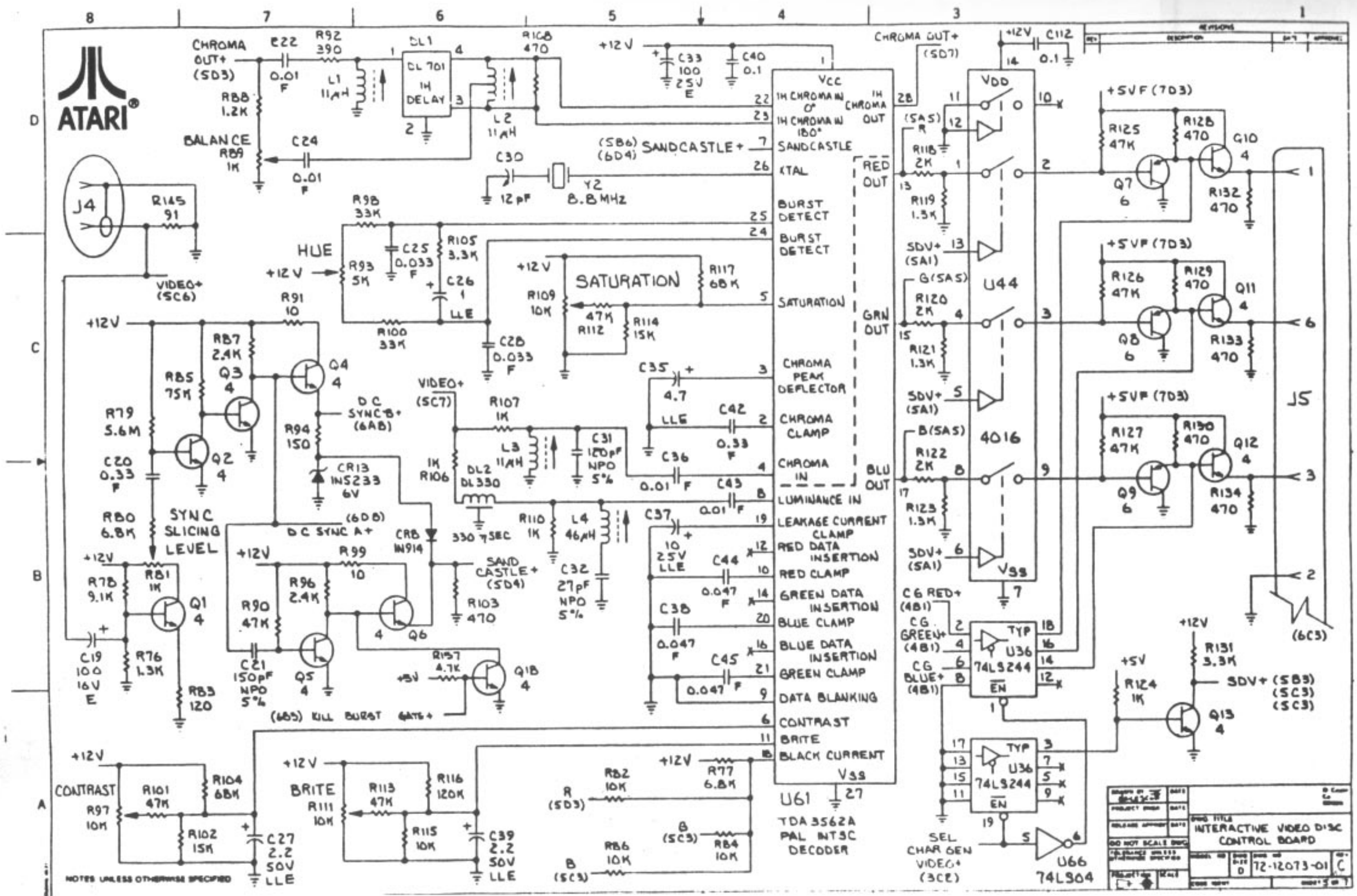
ATARI®
CHROMA OUT+ (SD3)
C22 0.01 F
R92 390
L1 11µH
DL1 DL 701 1H DELAY
L2 11µH
R108 470
+12V
C33 100 25V E
C40 0.1
R88 1.2K
BALANCE R89 1K
C24 0.01 F
C30 12 pF
Y2 8.8 MHz
(SB6) (6D4) SANDCASTLE+
J4
R145 91
VIDEO+ (SC6)
R98 33K
HUE
R93 5K
C25 0.033 F
R105 3.3K
C26 1 LLE
R100 33K
R91 10
R109 10K
SATURATION
R117 68K
47K R112
R114 15K
C28 0.033 F
C35 4.7 LLG
C42 0.33 F
C36 0.01 F
C43 0.01 F
C37 10 25V LLE
C44 0.047 F
C38 0.047 F
C45 0.047 F
R87 2.4K
R85 75K
Q3 4
Q4 4
Q2 4
R79 5.6M
C20 0.33 F
R80 6.8K
SYNC SLICING LEVEL
VIDEO+ (SC7)
R107 1K
L3 11µH
C31 120pF NPO 5%
1K R106
DL2 DL330
330 nSEC
R110 1K
L4 46µH
C32 27pF NPO 5%
R94 150
DC SYNC B+ (6A8)
CR13 IN5233 6V
(6D8) DC SYNC A+
CR8 IN914
SAND CASTLE+ (SD4)
R103 470
R99 10
R96 2.4K
R90 47K
Q6 4
Q5 4
C21 150pF NPO 5%
R78 9.1K
R81 1K
Q1 4
C19 100 16V E
R76 1.3K
R83 120
R157 4.7K
Q18 4
(6B5) KILL BURST GATE+
CONTRAST
R101 47K
R104 68K
R97 10K
R102 15K
C27 2.2 50V LLE
BRITE
R111 10K
R113 47K
R116 120K
R115 10K
C39 2.2 50V LLE
R82 10K
R (SD3)
B (SC3)
R77 6.8K
R84 10K
R86 10K
B (SC3)
NOTES UNLESS OTHERWISE SPECIFIED
Vcc
1H CHROMA IN 0°
1H CHROMA IN 180°
SANDCASTLE
XTAL
BURST DETECT
BURST DETECT
SATURATION
CHROMA PEAK DEFLECTOR
CHROMA CLAMP
CHROMA IN
LUMINANCE IN
LEAKAGE CURRENT CLAMP
RED DATA INSERTION
RED CLAMP
GREEN DATA INSERTION
BLUE CLAMP
BLUE DATA INSERTION
GREEN CLAMP
DATA BLANKING
CONTRAST
BRITE
BLACK CURRENT
Vss
U61
TDA 3562A PAL NTSC DECODER
1H CHROMA OUT
RED OUT
GRN OUT
BLU OUT
CHROMA OUT+ (SD7)
+12V
C112 0.1
VDD
Vss
U44
4016
(SA5) R
R118 2K
R119 1.5K
SDV+ (SA1)
G(SAS)
R120 2K
R121 1.3K
B(SAS)
R122 2K
R123 1.3K
C6 RED+ (4B1)
CG GREEN+ (4B1)
CG BLUE+ (4B1)
U36 74LS244
EN
SEL CHAR GEN VIDEO+ (3C2)
U66 74LS04
+5VF (7D3)
R125 47K
R128 470
Q10 4
Q7 6
R132 470
R126 47K
R129 470
Q11 4
Q8 6
R133 470
R127 47K
R130 470
Q12 4
Q9 6
R134 470
J5
(6C3)
+5V
R124 1K
R131 3.3K
Q13 4
SDV+ (SB3) (SC3) (SC3)
INTERACTIVE VIDEO DISC CONTROL BOARD
72-12073-01
C
D

ATARI®

+12V
0.1 C118
0.1 C119
R152 390
CR10 IN914
C46 0.1
R95 240Ω
CR12 IN914
SANDCASTLE+ (5D4)
D C SYNC A+ (5B7)
R151 33K
C29 330pF NPO
U68 LM555
CR11 IN5225 3V
+12V
R155 68K
C114 0.01 F
C41 0.005
C115 0.005
U67 LM555
+5V
R147 240
R156 240
(5C1)
V SYNC OUT
COMP SYNC OUT
J5
(4A4) V SYNC-
(4A4) V SYNC+
74LS244 U65
C & COMP SYNC + (4D1)
U66 74LS04
CHAR GEN ON- (4B6)
R153 1.5K
R154 750
DISC TTL V SYNC-
(4A7) DISC TTL V SYNC+
DISC COMP TTL SYNC-
DISC COMP TTL SYNC+
R149 1.5K
R150 750
D C SYNC B+ (5C6)
CHAR GEN ON+ (5C2)
+5V
BBS LC + (1B8)
PAL 20L8
U69 44-12074-03
FULL BURST GATE + (5A6)

NOTES UNLESS OTHERWISE SPECIFIED

DWG TITLE
INTERACTIVE VIDEO DISC CONTROL BOARD
72-12073-01 C

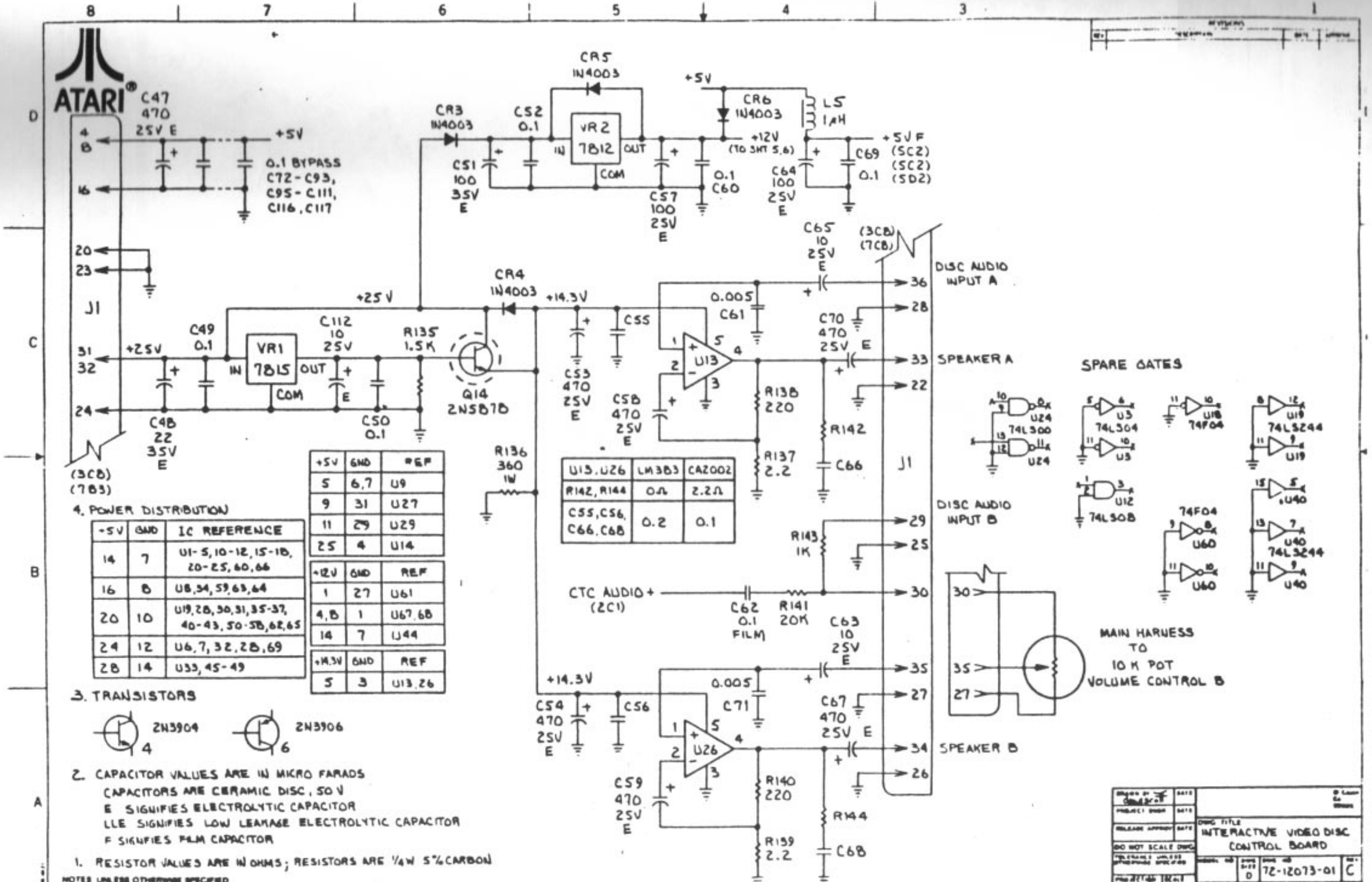

+5V	GND	REF
5	6,7	U9
9	31	U27
11	29	U29
25	4	U14

+12V	GND	REF
1	27	U61
4,8	1	U67,68
14	7	U44

+14.3V	GND	REF
5	3	U13,26

U13,U26	LM383	CA2002
R142, R144	0Ω	2.2Ω
C55, C56, C66, C68	0.2	0.1

4. POWER DISTRIBUTION

+5V	GND	IC REFERENCE
14	7	U1-5, 10-12, 15-18, 20-25, 60, 66
16	8	U8, 54, 59, 63, 64
20	10	U19, 28, 30, 31, 35-37, 40-43, 50-58, 62, 65
24	12	U6, 7, 32, 28, 69
28	14	U33, 45-49

3. TRANSISTORS

2N3904 4 2N3906 6

2. CAPACITOR VALUES ARE IN MICRO FARADS
CAPACITORS ARE CERAMIC DISC, 50 V
E SIGNIFIES ELECTROLYTIC CAPACITOR
LLE SIGNIFIES LOW LEAKAGE ELECTROLYTIC CAPACITOR
F SIGNIFIES FILM CAPACITOR

1. RESISTOR VALUES ARE IN OHMS; RESISTORS ARE 1/4W 5% CARBON

NOTES UNLESS OTHERWISE SPECIFIED

DWG TITLE: INTERACTIVE VIDEO DISC CONTROL BOARD
SIZE D | 72-12073-01 | C