TARG

Technical Manual 1.1

TARG™

Technical Manual 1.1

© 1980 Exidy, Inc.
390 Java Drive, Sunnyvale, California 94086
Telephone: (408) 734-9410
Telex: 357-499

TABLE OF CONTENTS

I. TARG Audio Description of Operation 1
A. Introduction 1
B. Address Decoding and Input Data Latches 1
C. Clock Divider 1
D. Tone Sequence Generator 2
E. White Noise Generator 2
F. Explosion/Crash Sound Generator 2
G. Shot Sound Generator 3
H. Spectar (Special Target) Sound Generator 3
I. Summing Amplifier and Integrator 3
J. Audio Amplifier 4

II. Logic Description and Operation 5

III. Audio Adjustments 8

IV. Power Supply Adjustments 9

V. Mechanical Assemblies 10
A. Control Panel 10
B. Joystick 12
C. Monitor 12
D. Logic and Audio Boards 14

VI. Schematics 15

VII. Parts List

LIST OF FIGURES

Figure 1 Logic Board Block Diagram 7
Figure 2 Audio Board Adjustments 8
Figure 3 Power Supply Adjustment 9
Figure 4 Control Panel 11
Figure 5 Four-way Joystick 12
Figure 6 Logic and Audio Boards 24

I. TARG Audio Description of Operation

A. Introduction

The TARG audio PCB is comprised of the following functionally distinct sections:

Address Decoding and Input Data Latches
Clock divider
Tone sequence generator
White noise generator
Explosion/Crash sound generator
Shoot sound generator
Special Target (SPECTAR) sound generator
Summing Amplifier and Integrator
Audio Amplifier

B. Address Decoding and Input Data Latches

A two-to-four line decoder IC at location 1D detects the combination of the audio board select signal ABSEL and the WRITE signal. The WRITE signal is derived from the CPU read/write signal R/W, logically AND'ed with CPU clock $\phi 2$ (phase two).

Address line A0 (Address Zero) is used to route the incoming data byte from the Logic PCB to one of two 8-bit latches, where data are held until new data are written to the same latch. If A0 is a logical zero at the time of a write to the audio PCB, the latch at location 2C will receive the data byte. If A0 is a logical one at this time, the latch at location 2D will receive the data byte instead.

The bits that comprise these data bytes are directly used as enables for the various sound geration circuits.

C. Clock Divider

The clock divider simply divides the $\phi 2$ (phase two) clock frequency downward approximately near 706 Khz to approximately 10 Khz. This puts the clock frequency in the proper range to generate the musical tone sequence used for the player (Wummel) image movement.

The clock divider consists of counters 1A and 1B, whose preload combination divides the $\phi 2$ clock by 71.

D. Tone Sequence Generator

This generates the musical tone sequence used for the player (WUMMEL) image movement. The 10 Khz clock provided by counters 1A and 1B is further divided by counters 3A and 3B to a frequency determined by their preload supplied by PROM 2B.

PROM 2B is programmed to supply the necessary preloads, in sequence by address, to generate a half-cycle of desired tones. The addresses of the PROM are incremented by counter 2A, which counts once each time signal NOTE is set to a high (logical one) state. Setting NOTE high also enables the flip-flop segment 5D which receives the terminal count of the counters (from counter 3B). This terminal count is of short duration, so flip flop 5D simultaneously divides the frequency by two and creates a 50 % duty cycle (high time = low time) which is pleasant to the ear. The tone will continue until NOTE is set once again to a low (logical zero) state.

PROM 2B is programmed to supply two different tone sequences. One sequence begins the game and continues until the CPU sets signal UPPER to a high state. This causes the PROM to issue the preloads for the second of the two tone sequences. The second sequence is used when the CPU decides that a sufficient state of tension now exists in the play of the game.

E. White Noise Generator

This generates the white noise (noise across a wide bandwidth) that is used by the explosion/crash sound generator circuit.

This noise is created by amplifying electron agitation generated in a transistor junction (Q4) which is reverse biased to a degree that causes the junction to "break down".

Transistor Q5 forms a low impedance output source for this noise.

F. Explosion/Crash Sound Generator

The crash/explosion sound is generated by active-filtering the white noise, and gating it through to the summing amp at the selected time. The trailing edge of the crash/explosion sound is allowed to dissipate slowly (rather than an abrupt halt) due to the discharge of capacitors C35, C36 through resistor R24. The circuit is enabled by signal CRASH, and the trailing edge length of decay can be changed by the use of signal LONG. In this case, however, (TARG), LONG remains in an enabled state throughout the game.

G. Shoot Sound Generator

The SHOOT sound is actually a combination of a triangular wave tone and white noise.

The tone is created by VCO 4B. Its oscillating range is set by pot R10. When signal SHOOT is held low (logic zero state), transistor Q1 is turned on, developing a voltage across its emitter resistor R2. This voltage, applied to the control input of amplitude modulator 4A, inhibits the output of amplitude modulator 4A.

When SHOOT is set high, transistor Q1 turns off, enabling the Amplitude Modulator output. This also puts a virtual ground on one side of capacitor C29 and results in dragging the control voltage input of VCO 4B low, raising its frequency of oscillation.

The virtual ground at the control voltage input of VCO 4B lasts only as long as it takes C29 to charge up again, so the frequency out of VCO sweeps from high to low.

The tone is given the "hissing" sound by applying a small white noise signal to the base of transistor Q1, which varies the output amplitude.

When SHOOT is again set low, the output amplitude (out of 4A) decreases at a rate determined by the charge rate of capacitor C14.

H. Spectar (Special Target) Sound Generator

Consists of two halves of a 556 timer IC (5A), both configured in a free-running state.

Signal 5SPEC, when set low, enables both oscillators. The charge/discharge ramp at the THRESHOLD input of the first stage is coupled to the CONTROL VOLTAGE input of the second stage to provide a frequency varying tone out of the second stage.
Signal 5WARN, when set high, provides a slowly varying frequency output, and when set low provides a rapidly varying frequency output.

I. Summing Amplifier and Integrator

Two segments of an LM324 operational amplifier are used here. The first is configured as a summing amplifier. It is the common point at which all the various sounds are algebraically added to become one signal which is the composite of all individually developed sounds. Thus this is also the location of the MASTER VOLUME control (R22).

The second LM324 segment is configured as an INTEGRATOR. Its purpose is to eliminate some of the higher frequencies, in order to make a more pleasant sound and also to aid in the prevention of oscillation due to those higher frequencies.

J. Audio Amplifier

The final audio amplifer is a single IC (6A) which is configured as a bridge amplifier. The composite audio signal is applied to the input of one of the two internal segments and the output swings in accordance with the input signal. The feedback on this segment is not only fed back to the inverting input of the same segment, but is also applied to the inverting input of the other segment. This creates a condition wherein one segment swings positive, and the other segment simultaneously swings in a negative direction, creating an output twice the voltage of a single segment.

Note that three types of audio amplifier IC's may be found in this position. They are all identical except for total power output and pinout. They are: LM377 DUAL 2W, LM378 Dual 4W, and LM 379 Dual 6W.

II. LOGIC DESCRIPTION AND OPERATION

TARG uses a 6502 MICROPROCESSOR. For more detailed information on this processor, refer to MOSTEK publication #6500-10A, MCS Microcomputer Family Hardware Manual.

The memory in this system is mapped as follows:

0000-00FF	Base Page RAM
0100-01FF	Stack
0200-03FF	Scratch Pad RAM
1800-3FFF	Program ROM
4000-43FF	Screen RAM
4800-4FFF	Character Generator RAM
5000-503F	Wummel Image Horizontal Position
5040-507F	Wummel Image Vertical Position
5100	On Board Dip Switch (Read)
5100	Wummel Image Rotation Latch
5101	Switch Register
5103	Interrupt Register
5200	Audio Board Register
5201	Audio Board Register
FFF7-FFFF	Interrupt & Reset vectors

Note that this processor does not have a separate I/O structure. Rather, it treats I/O as if it were memory. Base page RAM is used for storage of dynamic variables during program execution. The processor uses stack RAM to hold return addresses and important data during subroutine execution. The program ROM is where the non-variable, actual game program is stored.

The screen RAM consists of 1K bytes which, when not accessed by the processor, are scanned by main timing to display 1024 squares in a matrix of 32 x 32. The data stored in the screen RAM then selects one of 256 (8-element-wide by 8-line-high) images in the character generator RAM. These 8 x 8 bit blocks fit together to form the playfield imagery. (Alphanumeric characters take one block each to be displayed). The Wummel and its missiles are each positioned by two sets of counters (horizontal and vertical). The actual imagery for these is generated by feeding the outputs of the counters, along with data from a special rotation latch, to the hardware moving object ROM. That ROM then places the correct image in the correct place on the screen. The processor controls this operation by preloading the counters and writing to the rotation latch during vertical retrace.

The processor reads data from the control or option switches by gating the data from the appropriate port onto the bus when the correct address is selected.

The processor controls the operation of the audio board by writing data onto the bus when the address for the audio board bus buffer is selected.

Interrupts can come from three different sources. The first is a synchronous hardware generated interrupt. This occurs regularly at the vertical rate and can be detected by reading the 5L256 bit on the interrupt condition latch. This interrupt is important for providing the processor with a known real time interval used to update the screen, time counters, image velocity rates, etc. The remaining event causing interrupts is the presence of a coin signal on either of the two coin inputs. These are obviously asynchronous and are discernable from each other and from the vertical rate interrupt by testing their respective bits on the interrupt condition latch.

Main address decoding is accomplished by using A15 through A5 inputs to a PROM. The 5 outputs of the PROM are further decoded into "blocks" in minimum increments of 2K. The signals associated with these blocks are enables for other address decoding circuits that "break up" those blocks. By using lower order address bits, the blocks break into smaller pieces giving peripheral devices a specific, unique address. This is accomplished by loading data from the screen RAM, character generator RAM and moving object ROM into parallel-in/serial-out data at 256 times the horizontal rate. This is the screen element rate. It therefore follows that 256 elements = 1 horizontal line and 256 horizontal lines make a full screen.

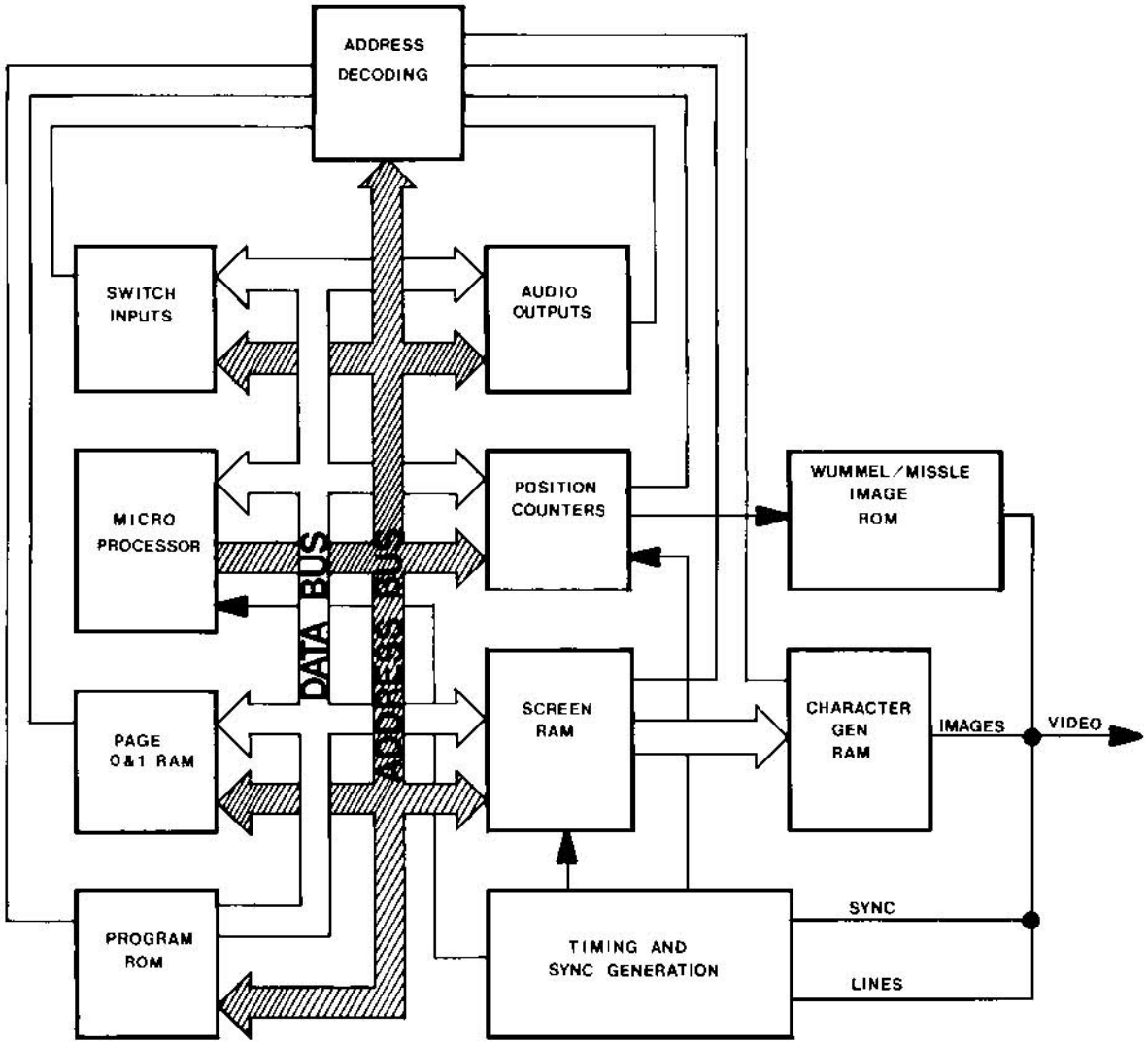

Figure 1:
LOGIC BOARD BLOCK DIAGRAM

TARG™

III. AUDIO ADJUSTMENTS

The following is a diagram of the audio board adjustments.

TARG AUDIO PCB POT CONFIGURATION

(ADJUSTMENTS)

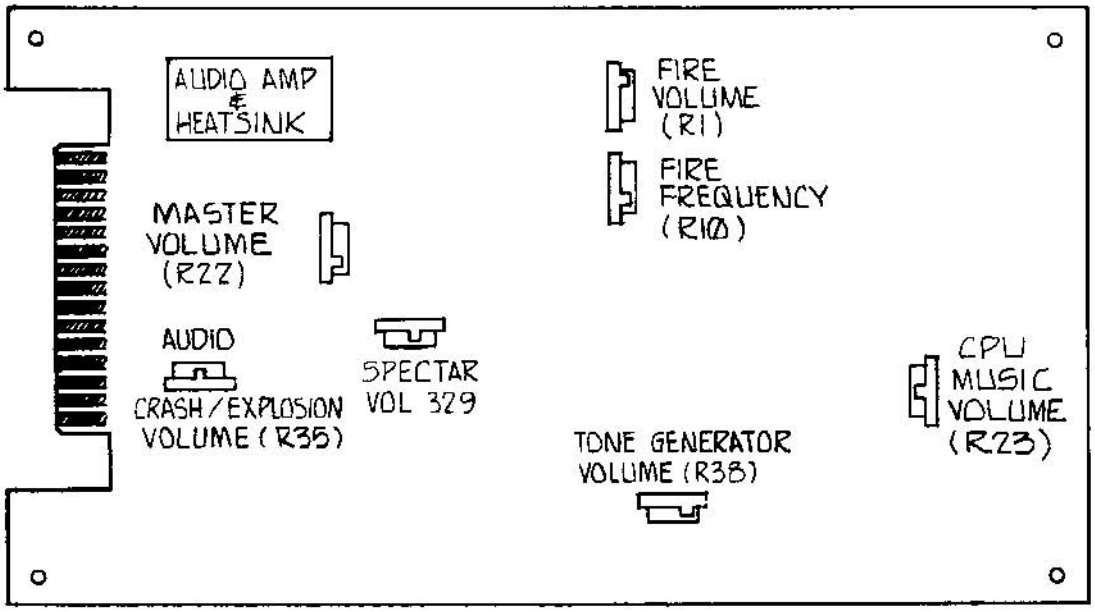

Front (component) side

Figure 2. Audio Board Adjustments

IV. POWER SUPPLY ADJUSTMENTS

1. Connect a voltmeter to the +5 and ground traces on the logic board.

2. Adjust the power supply potentiometer for +5.0 $\pm$ .1 VDC.

Figure 3. Power Supply Adjustment

V. MECHANICAL ASSEMBLIES

A. Control Panel

To service the Control Panel do the following:

1. Unplug the power cord.

2. Open and remove the back door.

3. From inside the cabinet, remove the upper three control panel nuts.

4. Open the coin door.

5. From the front of the cabinet, swing the control panel out and down; let it rest on the open coin door.

6. Check all terminal connections to the pushbuttons and the four-way control.

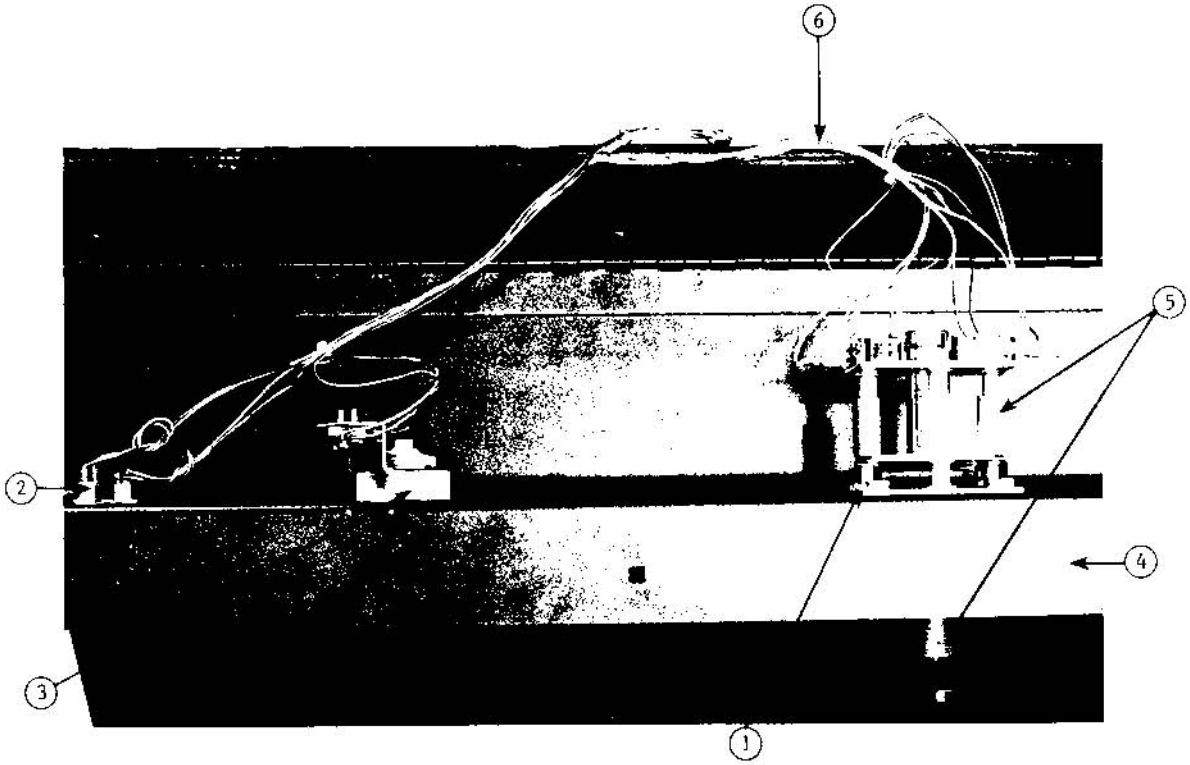

Figure 4: Control Panel

1 Carriage bolt
2 Start buttons
3 Fire button
4 Control panel
5 Four-way joystick
6 Control harness

B. To Service the Four-way Joy Stick

The four-way joy stick is assembled with four long screws and spacers. Four pairs of spring steel cup washers surround the control stick, between the control panel and the top plate (see Figure 4). These cup washers bear against a disk welded to the control stick, and push the stick towards its center (rest) position. Four leaf switches on the bottom plate (activated by the control stick) signal lane changes to the logic board.

Figure 4: Four-way Joy Stick

1 flat head screws
2 control stick
3 upper plate
4 carriage bolt
5 flat washer
6 control panel
7 cup washer
8 spacer, short
9 kep nut
10 lower disk
11 spacer, long
12 switch plate (bottom plate)
13 kep nut
14 leaf switch
15 phillips screw

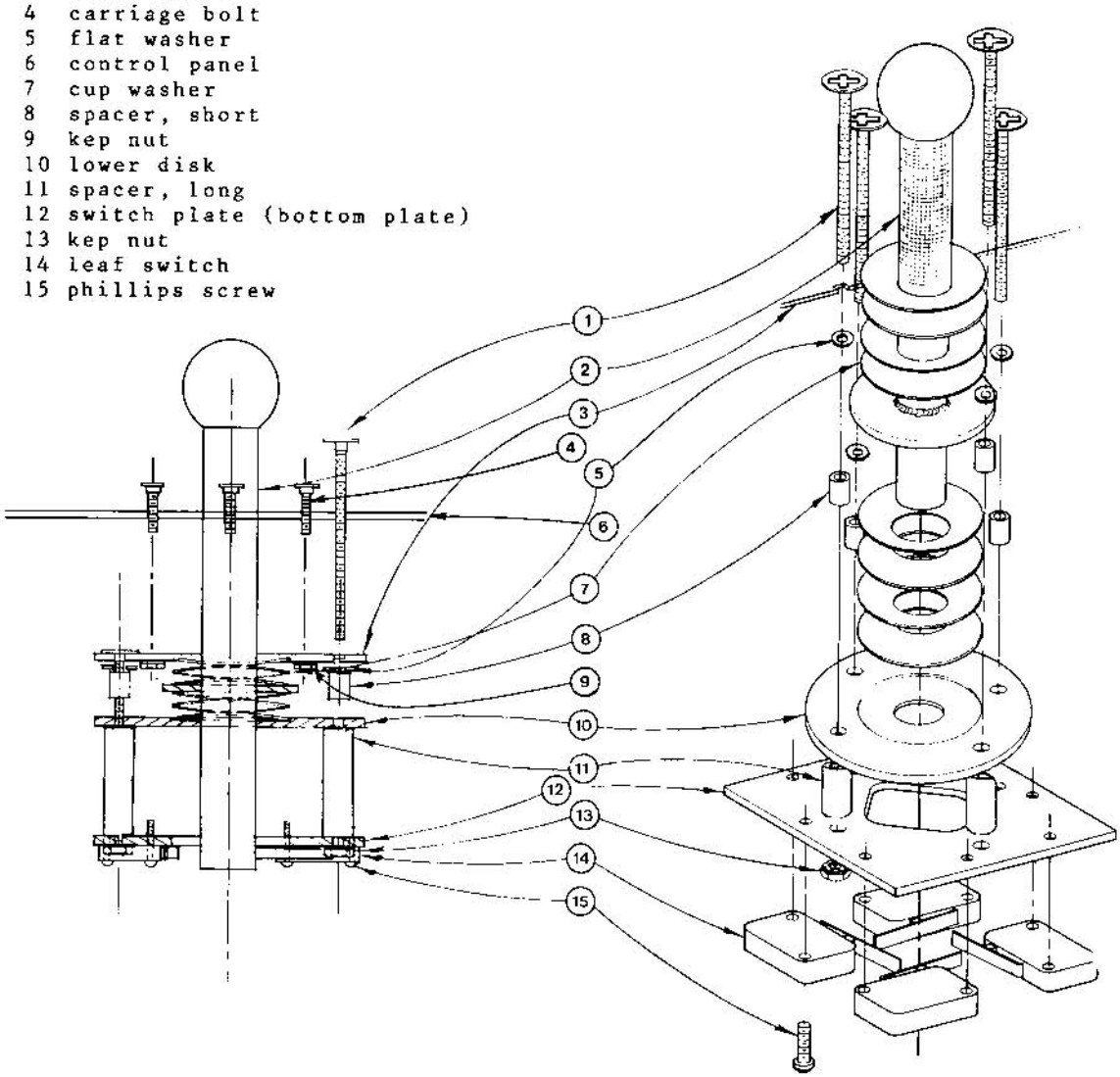

Do the following to service the Four-way Joy Stick:

1. Unplug the power cord.

2. Open the control panel by removing 3 black carriage bolts.

3. Check the harness connectors to each leaf switch.

4. Check the throw of each microswitch; the control stick should activate, but not bottom-out against, each switch.

5. If microswitches are broken or switch actuator bent, replace only with Exidy authorized parts. Do not used substitution.

C. To Remove the Monitor do the following:

1. Unplug the power cord.

2. Open and remove the back door or monitor access panel.

3. Unplug the harness connector from the monitor and the Monitor Power Connector.

4. Remove the four bolts from the monitor chassis flange mounts.

5. Lift the monitor up and slide it out of the cabinet.

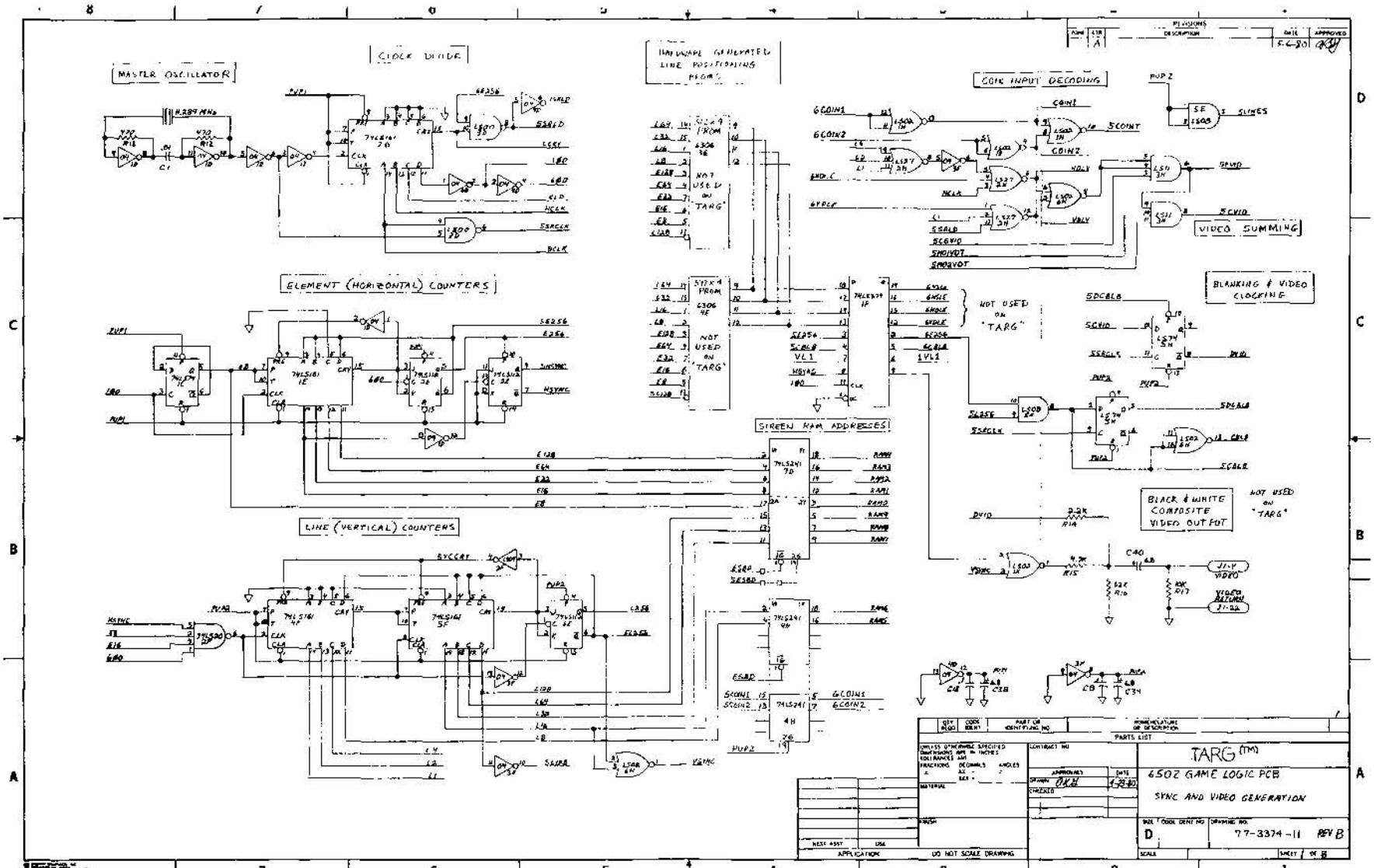
MASTER OSCILLATOR
CLOCK DIVIDE
HARDWARE GENERATED LINE POSITIONING PROMS
COIN INPUT DECODING
VIDEO SUMMING
ELEMENT (HORIZONTAL) COUNTERS
BLANKING & VIDEO CLOCKING
SCREEN RAM ADDRESSES
LINE (VERTICAL) COUNTERS
BLACK & WHITE COMPOSITE VIDEO OUTPUT
NOT USED ON "TARG"
TARG (TM)
6502 GAME LOGIC PCB
SYNC AND VIDEO GENERATION
77-3374-11 REV B
PARTS LIST
DO NOT SCALE DRAWING

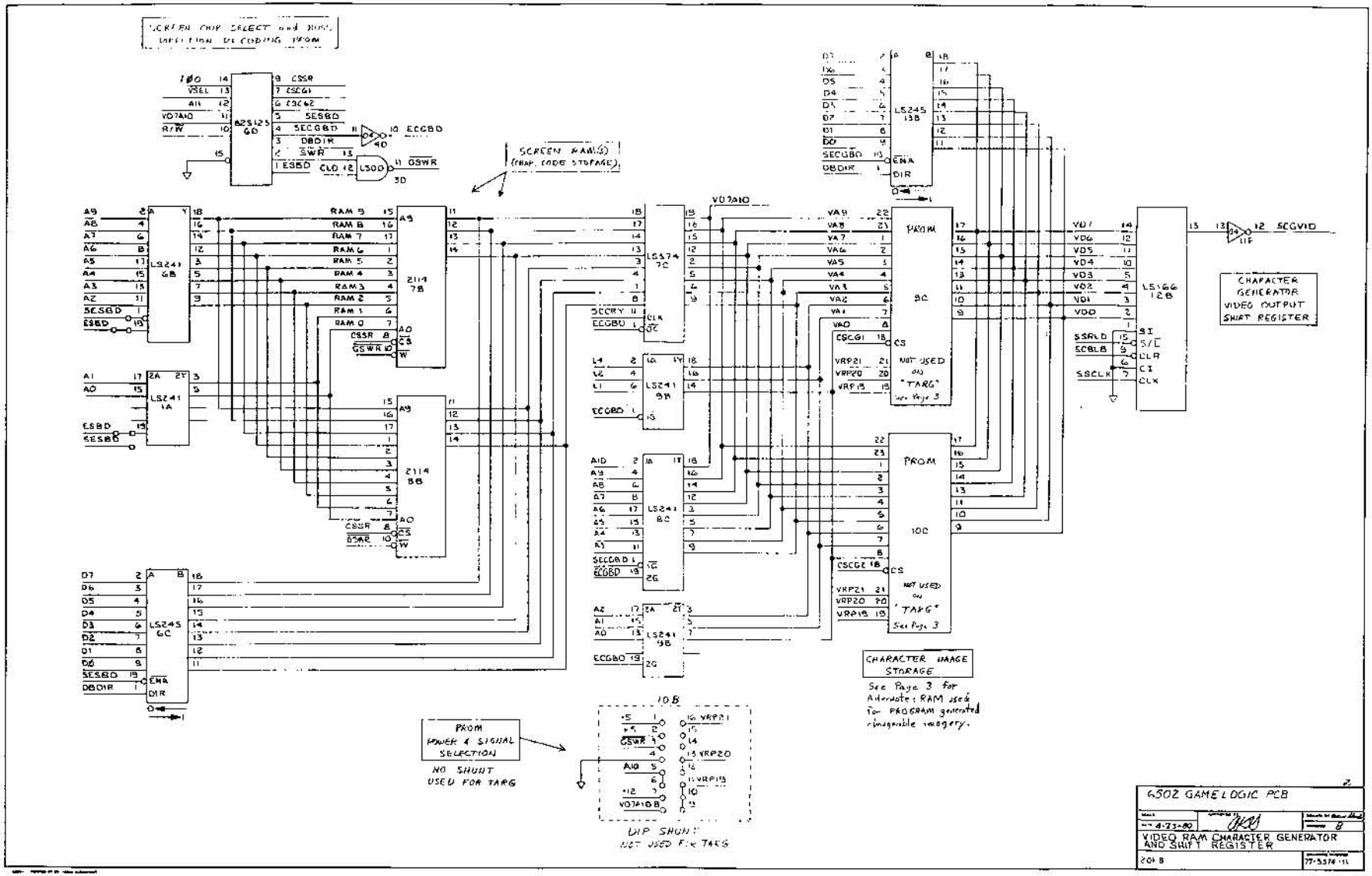
SCREEN CHIP SELECT and ROM/RAM SELECTION DECODING PROM
SCREEN RAM(S) (CHAR. CODE STORAGE)
VO7A10
CHARACTER GENERATOR VIDEO OUTPUT SHIFT REGISTER
SCGVID
CHARACTER IMAGE STORAGE
See Page 3 for Alternate RAM used for PROGRAM generated changeable imagery.
PROM POWER & SIGNAL SELECTION
NO SHUNT USED FOR TARG
DIP SHUNT NOT USED FOR TARG
6502 GAME LOGIC PCB
VIDEO RAM CHARACTER GENERATOR AND SHIFT REGISTER
201 B

CHARACTER GENERATOR
IMAGE STORAGE RAMS

For use with PROGRAM generated changeable imagery.

USED on "TARG"

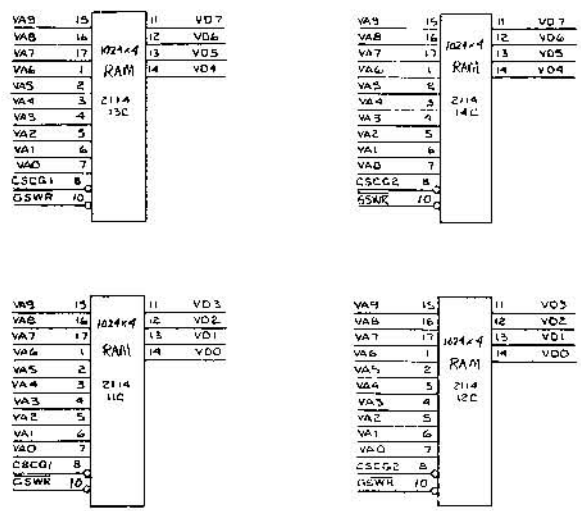

3

6502 GAME LOGIC PCB		
4 23 80	AKG	B
IMAGE STORAGE RAM		
3 01 8		77-3574-11

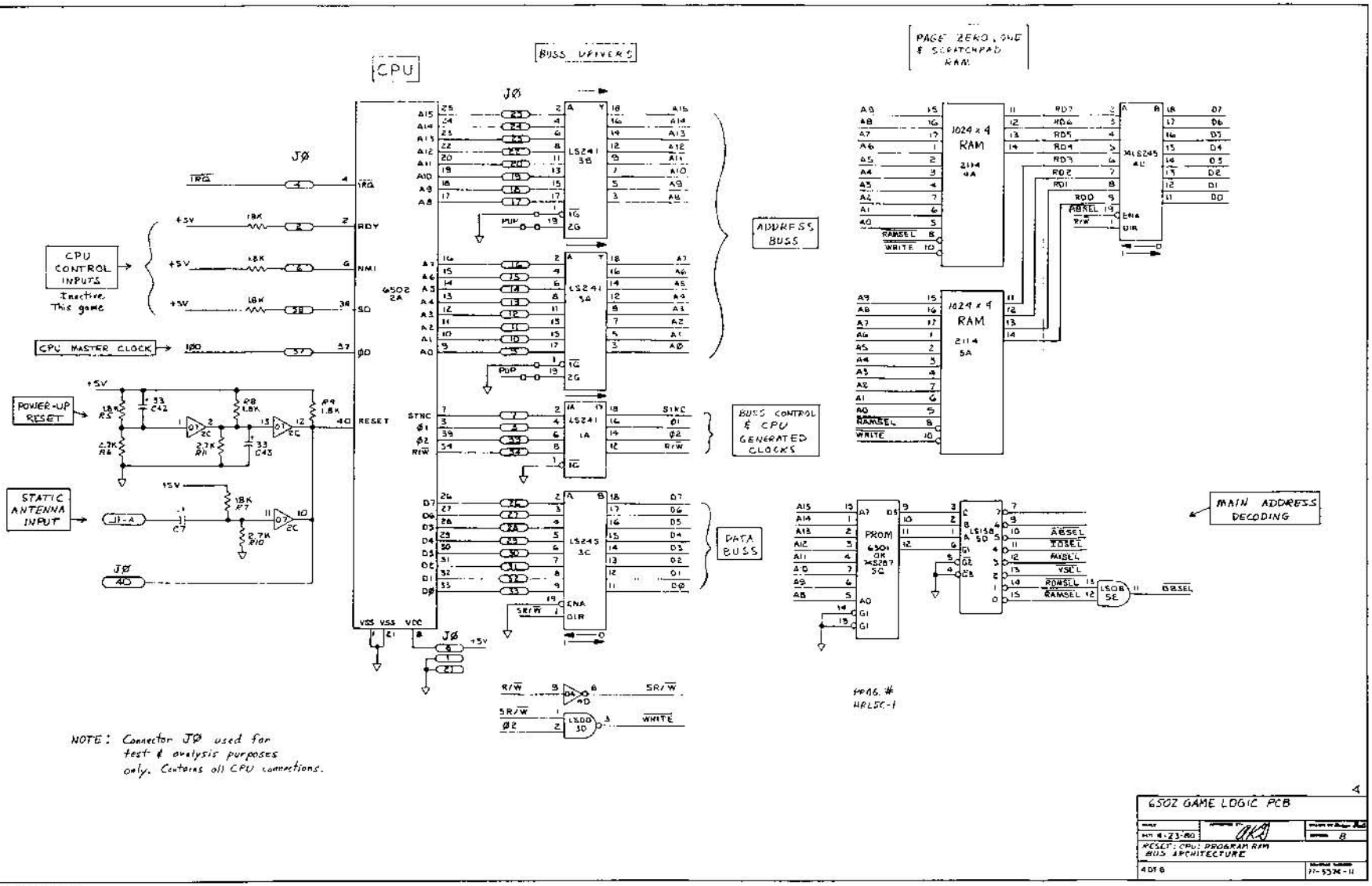
CPU
BUSS DRIVERS
PAGE ZERO, ONE & SCRATCHPAD RAM
CPU CONTROL INPUTS
Inactive This game
CPU MASTER CLOCK
POWER-UP RESET
STATIC ANTENNA INPUT
ADDRESS BUSS
BUSS CONTROL & CPU GENERATED CLOCKS
DATA BUSS
MAIN ADDRESS DECODING
1024 x 4 RAM
6502 2A
PROM
NOTE: Connector JØ used for test & analysis purposes only. Contains all CPU connections.
6502 GAME LOGIC PCB
RESET: CPU: PROGRAM RAM BUS ARCHITECTURE

PROGRAM MEMORY

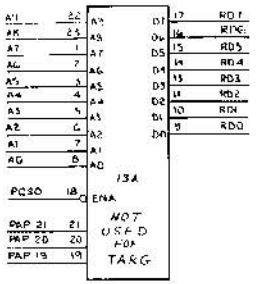

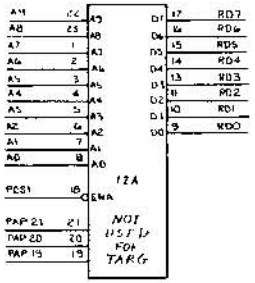

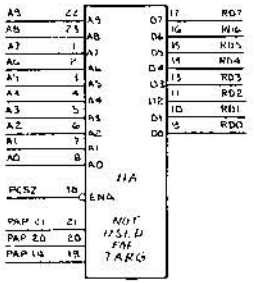

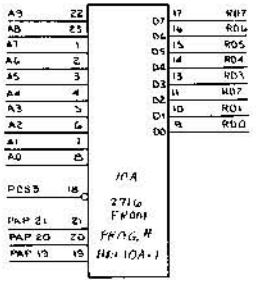

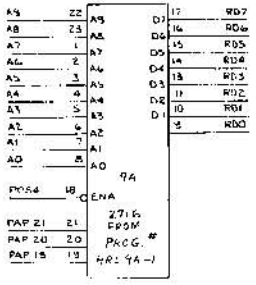

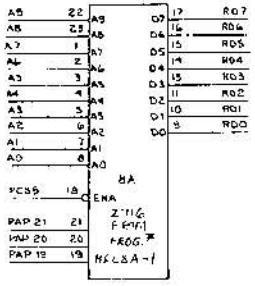

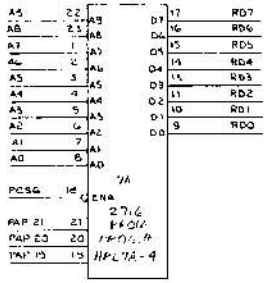

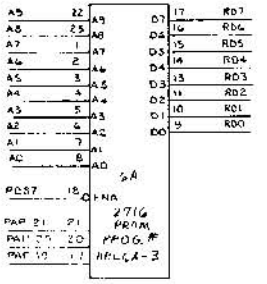

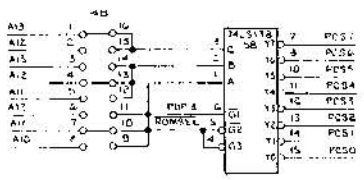

PROM ADDRESS SELECTION

Configured as shown for "TARG"

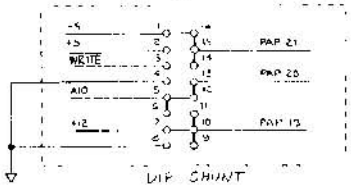

MEMORY DEVICE PERSONALITY SELECTION

Configuration shown for "3 voltage" 2716 EPROM

DATA BUS TERMINATION

Ringing Suppression

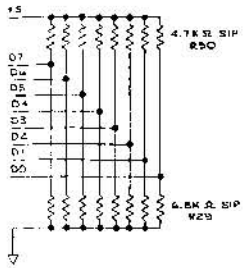

EXIDY INC.		
6502 GAME LOGIC PCB CPU ROM		
SDA B		22-5574-11

5

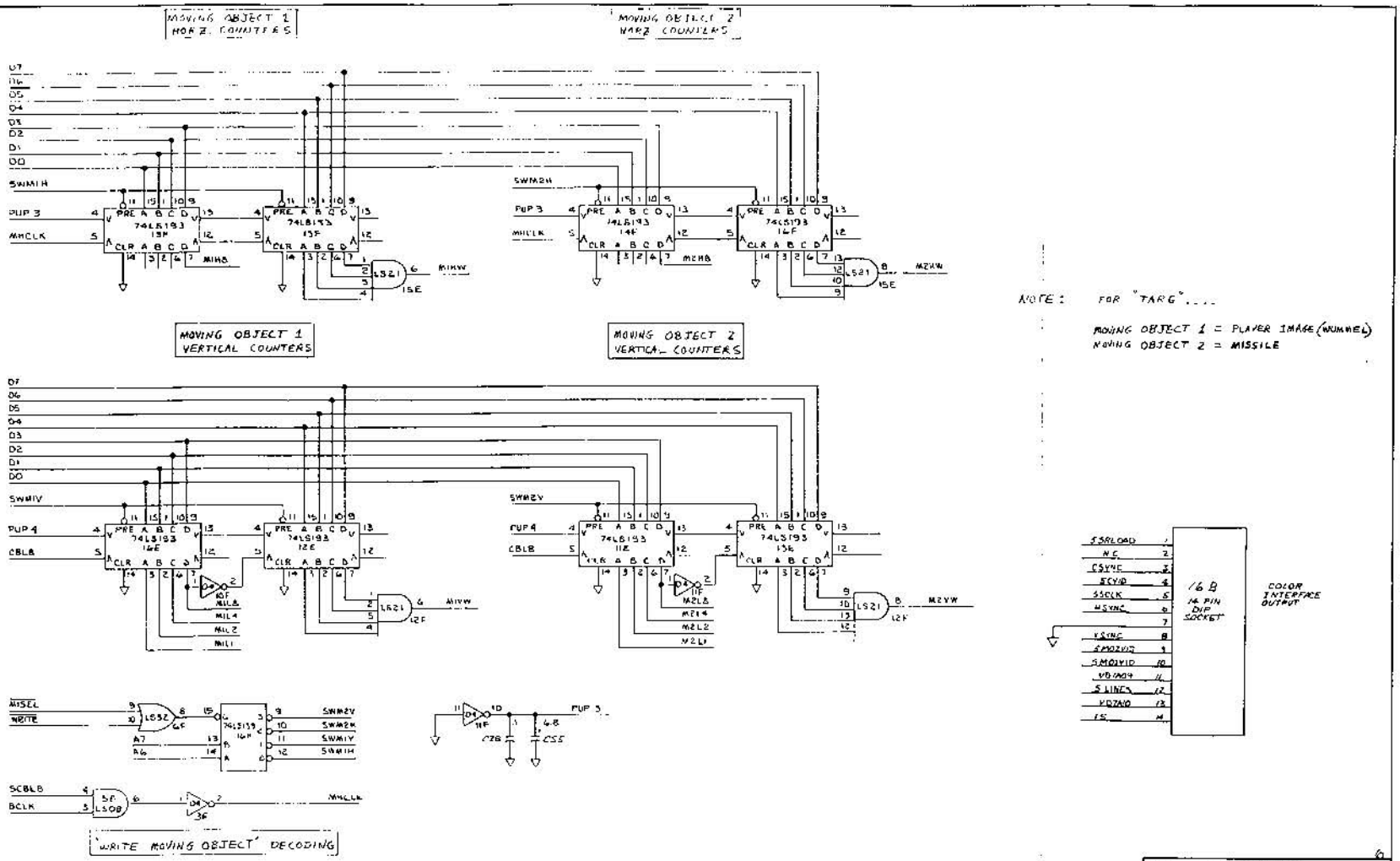
MOVING OBJECT 1 HORZ. COUNTERS
MOVING OBJECT 2 HORZ COUNTERS
MOVING OBJECT 1 VERTICAL COUNTERS
MOVING OBJECT 2 VERTICAL COUNTERS
"WRITE MOVING OBJECT" DECODING
NOTE: FOR "TARG"....
MOVING OBJECT 1 = PLAYER IMAGE (NUMMEL)
MOVING OBJECT 2 = MISSILE
16 B
16 PIN DIP SOCKET
COLOR INTERFACE OUTPUT
6502 GAME LOGIC PCB
COLOR TIMEBASE OUTPUT AND MOVING OBJECT POSITION COUNTERS
6 OF 8

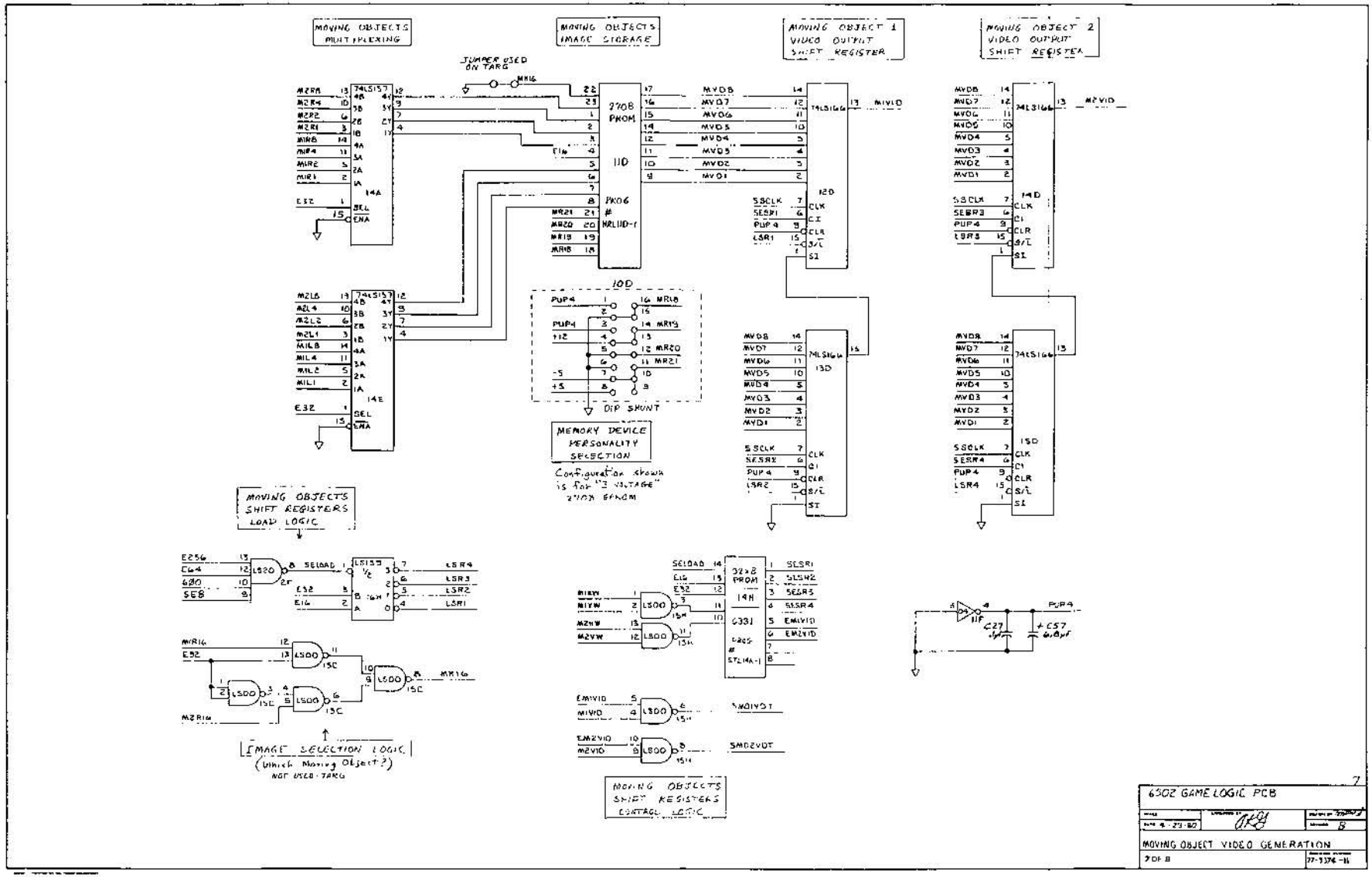
MOVING OBJECTS MULTIPLEXING
MOVING OBJECTS IMAGE STORAGE
MOVING OBJECT 1 VIDEO OUTPUT SHIFT REGISTER
MOVING OBJECT 2 VIDEO OUTPUT SHIFT REGISTER
JUMPER USED ON TARG
2708 PROM
11D
74LS157
14A
14E
74LS166
12D
13D
14D
15D
10D
DIP SHUNT
MEMORY DEVICE PERSONALITY SELECTION
Configuration shown is for "3 VOLTAGE" 2708 EPROM
MOVING OBJECTS SHIFT REGISTERS LOAD LOGIC
IMAGE SELECTION LOGIC
(Which Moving Object?)
NOT USED - TARG
32x8 PROM
14H
6331
MOVING OBJECTS SHIFT REGISTERS CONTROL LOGIC
PUP4
C27
C57
6.8µF
6502 GAME LOGIC PCB
MOVING OBJECT VIDEO GENERATION
7 OF 8
27-5374-11

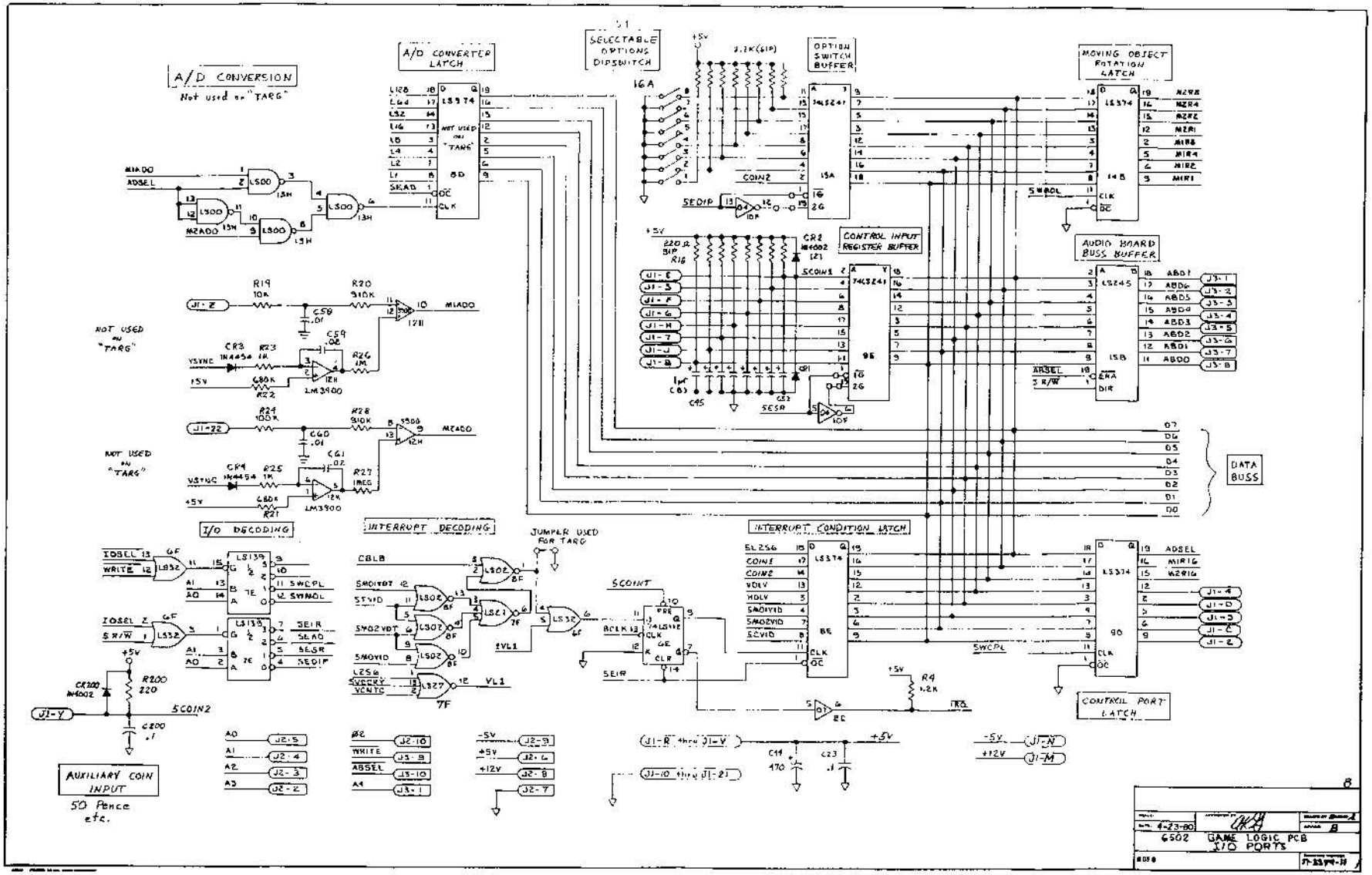
A/D CONVERSION
Not used on "TARG"
A/D CONVERTER LATCH
LS374
SELECTABLE OPTIONS DIPSWITCH
16A
OPTION SWITCH BUFFER
74LS241
MOVING OBJECT ROTATION LATCH
CONTROL INPUT REGISTER BUFFER
AUDIO BOARD BUSS BUFFER
LS245
DATA BUSS
NOT USED on "TARG"
LM3900
I/O DECODING
LS139
INTERRUPT DECODING
JUMPER USED FOR TARG
INTERRUPT CONDITION LATCH
CONTROL PORT LATCH
AUXILIARY COIN INPUT
50 Pence etc.
6502 GAME LOGIC PCB I/O PORTS
4-23-80

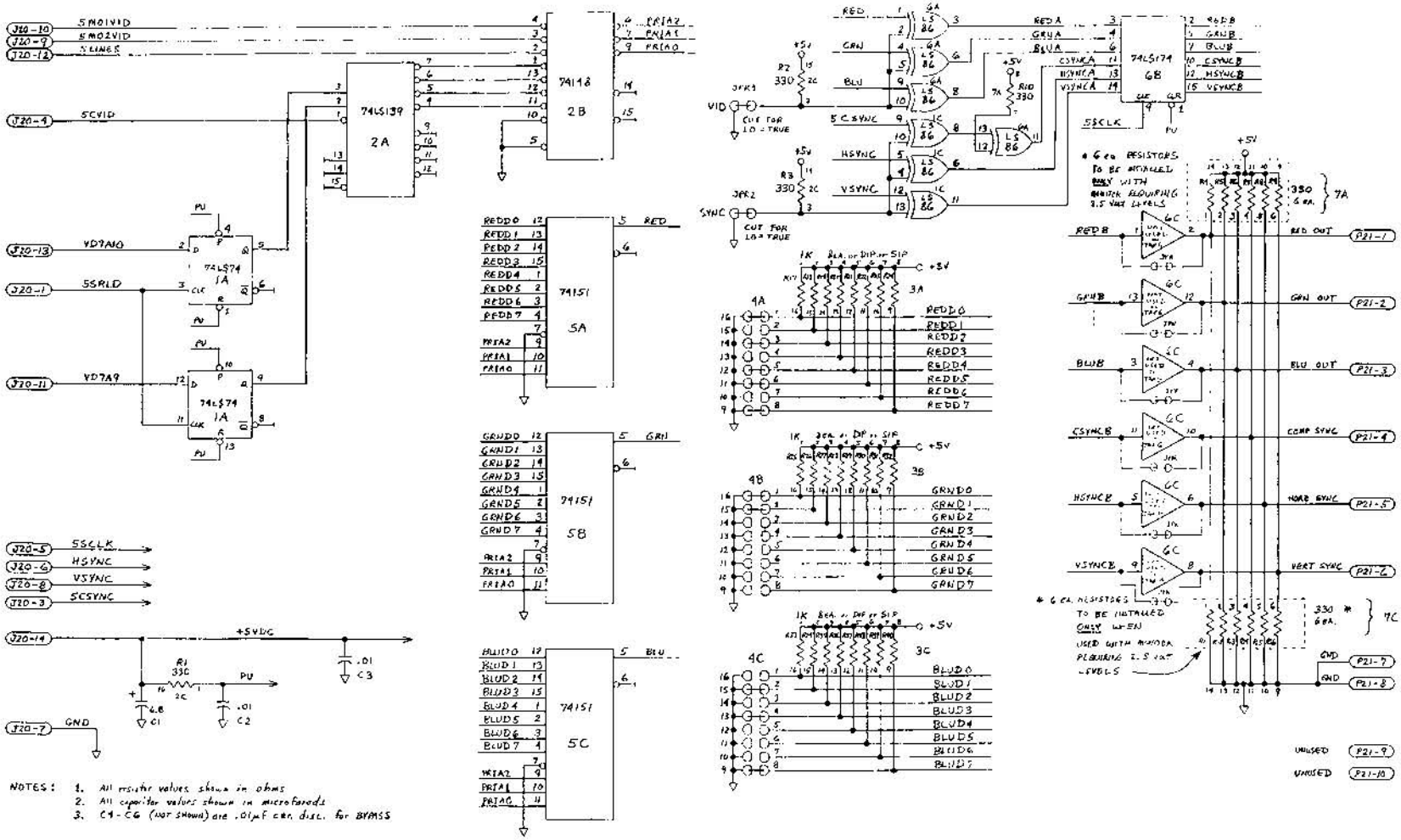

PROPRIETARY	DRAWN AKH	4-24-80	ENGINEER AKH	4-24-80	SHEET 1 OF 1		6502 Based VIDEO GAME		D	COLOR ADAPTER PCB		77-3373-11	A
	CHECKED [illegible]		PROJECT ENGINEER AKH	4-24-80									

8 7 6 5 4 3 2 1

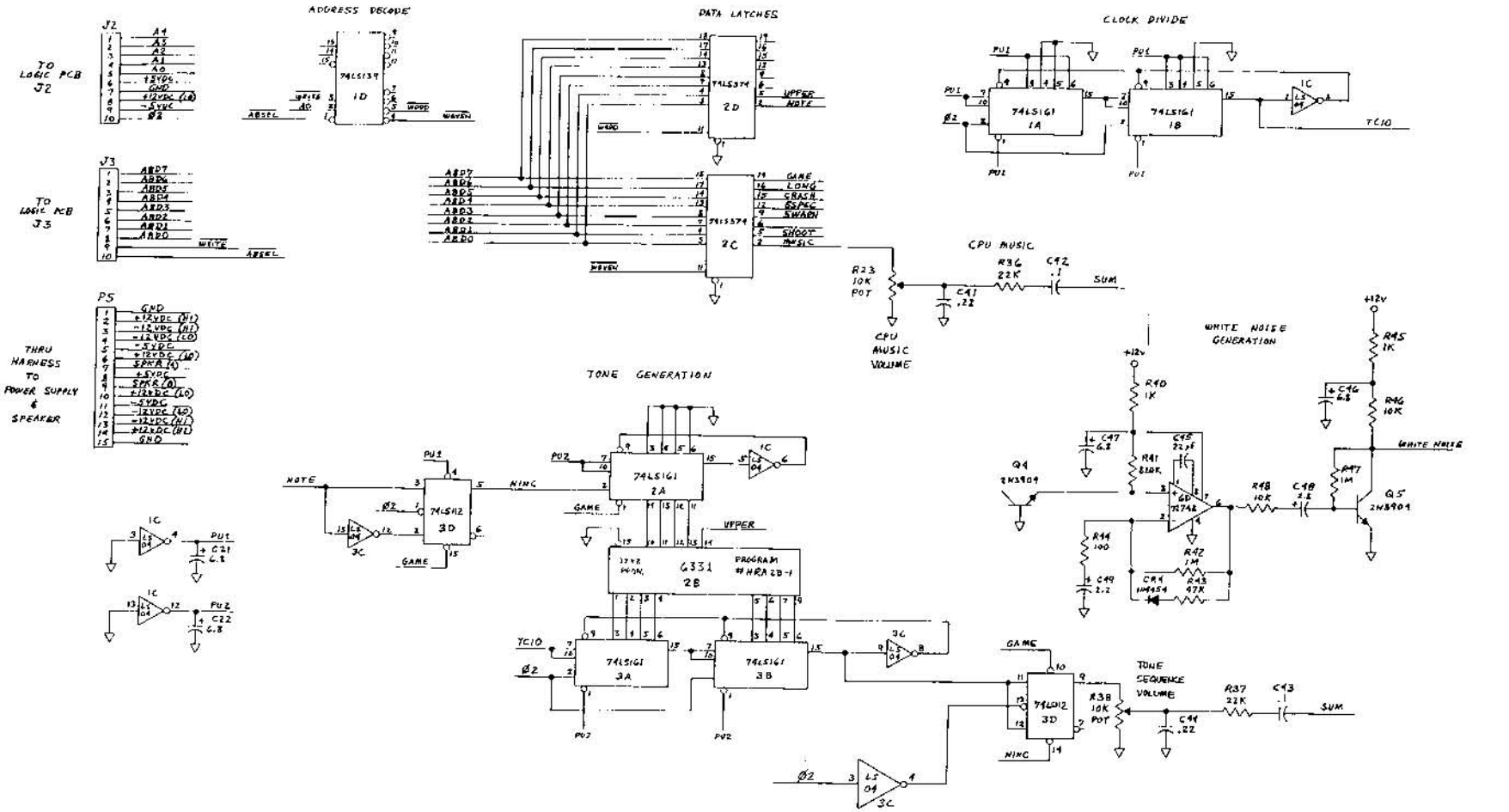

4-18-80 OKY 10

77-3371-11 REV B

TARG AUDIO PCB

1 of 2

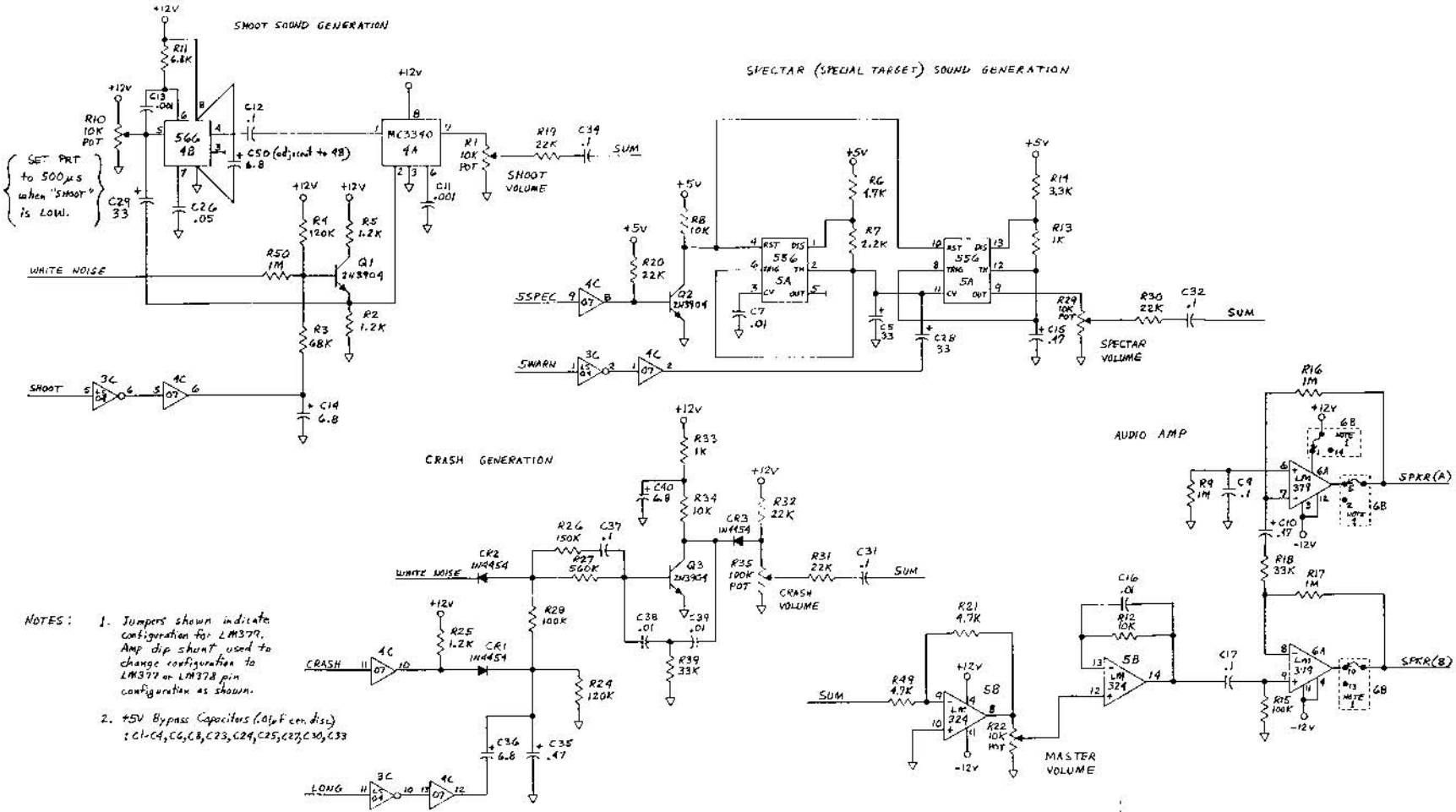

4-18-80 AKH 11

Schematic,

77-3371-11 REV B TARG AUDIO PCB

2 of 2

REVISIONS				
ZONE	LTR	DESCRIPTION	DATE	APPROVED

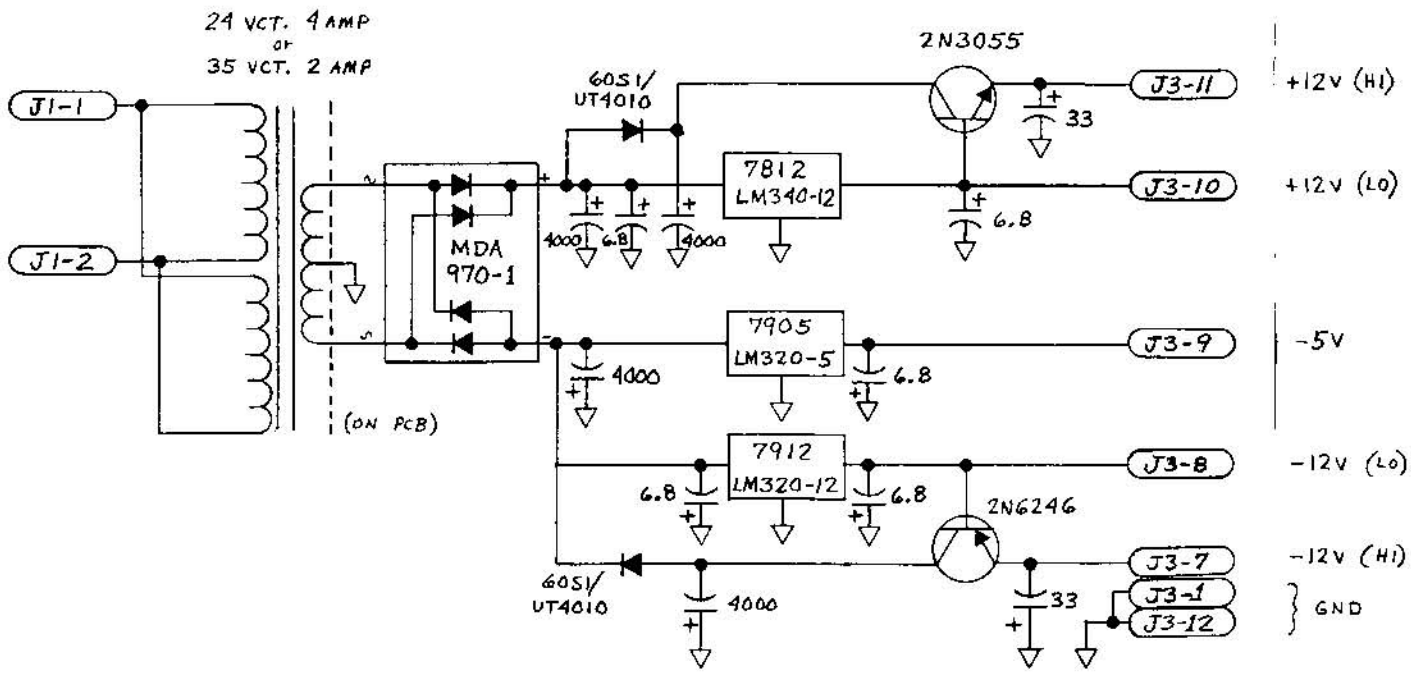

12

NOTES: 1. All capacitance values shown in microfarads (μf).

NEXT ASSY	USED ON	UNLESS OTHERWISE SPECIFIED DIMENSIONS ARE IN INCHES TOLERANCES ARE: FRACTIONS DECIMALS ANGLES ± .XX ± ± .XXX ±	CONTRACT NO.	SCHEMATIC
APPLICATION		MATERIAL	APPROVALS / DRAWN OMK / DATE 26/11/78 / CHECKED	UNIVERSAL POWER SUPPLY
		FINISH	SIZE B / CODE IDENT NO.	DRAWING NO. 77-3365-11
		DO NOT SCALE DRAWING	SCALE	SHEET 1 OF 1

BISHOP GRAPHICS, INC. PO ORDER NO. 20533

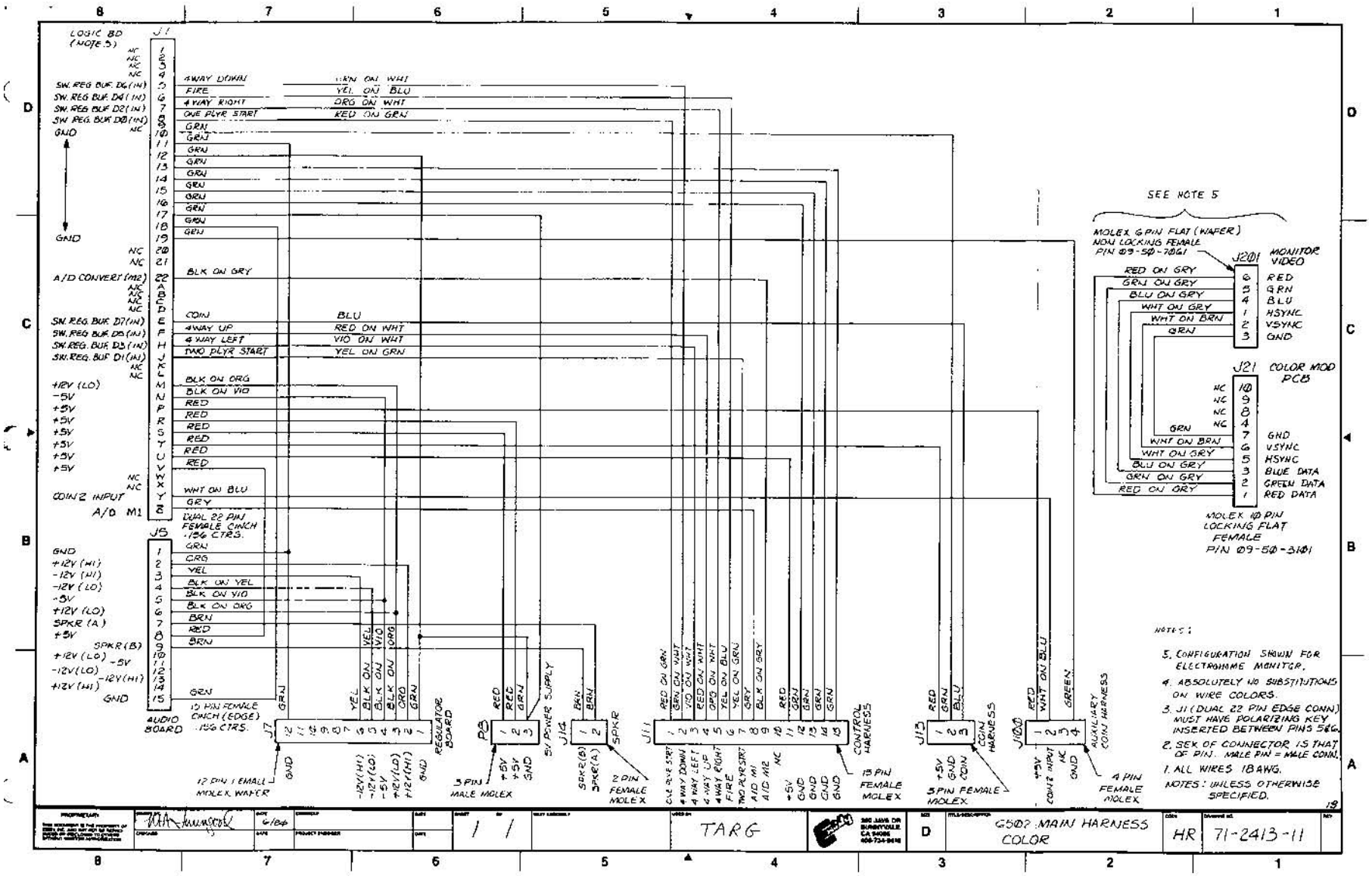
LOGIC BD (NOTE 5)
J1
4 WAY DOWN
FIRE
4 WAY RIGHT
ONE PLYR START
GND
A/D CONVERT (M2)
COIN
4 WAY UP
4 WAY LEFT
TWO PLYR START
+12V (LO)
-5V
+5V
WHT ON BLU
GRY
COIN 2 INPUT
A/D M1
DUAL 22 PIN FEMALE CINCH .156 CTRS.
J5
GND
+12V (HI)
-12V (HI)
-12V (LO)
SPKR (A)
SPKR (B)
AUDIO BOARD
15 PIN FEMALE CINCH (EDGE) .156 CTRS.
J7
12 PIN FEMALE MOLEX WAFER
REGULATOR BOARD
P3
3 PIN MALE MOLEX
5V POWER SUPPLY
J14
2 PIN FEMALE MOLEX
SPKR
J11
CONTROL HARNESS
15 PIN FEMALE MOLEX
J13
COIN HARNESS
3 PIN FEMALE MOLEX
J100
AUXILIARY COIN HARNESS
4 PIN FEMALE MOLEX
SEE NOTE 5
MOLEX 6 PIN FLAT (WAFER) NON LOCKING FEMALE P/N 09-50-7061
J201
MONITOR VIDEO
RED
GRN
BLU
HSYNC
VSYNC
GND
J21
COLOR MOD PCB
BLUE DATA
GREEN DATA
RED DATA
MOLEX 10 PIN LOCKING FLAT FEMALE P/N 09-50-3101
NOTES:
5. CONFIGURATION SHOWN FOR ELECTROHOME MONITOR.
4. ABSOLUTELY NO SUBSTITUTIONS ON WIRE COLORS.
3. J1 (DUAL 22 PIN EDGE CONN) MUST HAVE POLARIZING KEY INSERTED BETWEEN PINS 5&6.
2. SEX OF CONNECTOR IS THAT OF PIN. MALE PIN = MALE CONN.
1. ALL WIRES 18 AWG.
NOTES: UNLESS OTHERWISE SPECIFIED.
TARG
D
G502 MAIN HARNESS COLOR
HR
71-2413-11

CONTROL PANEL HARNESS
SCHEMATIC

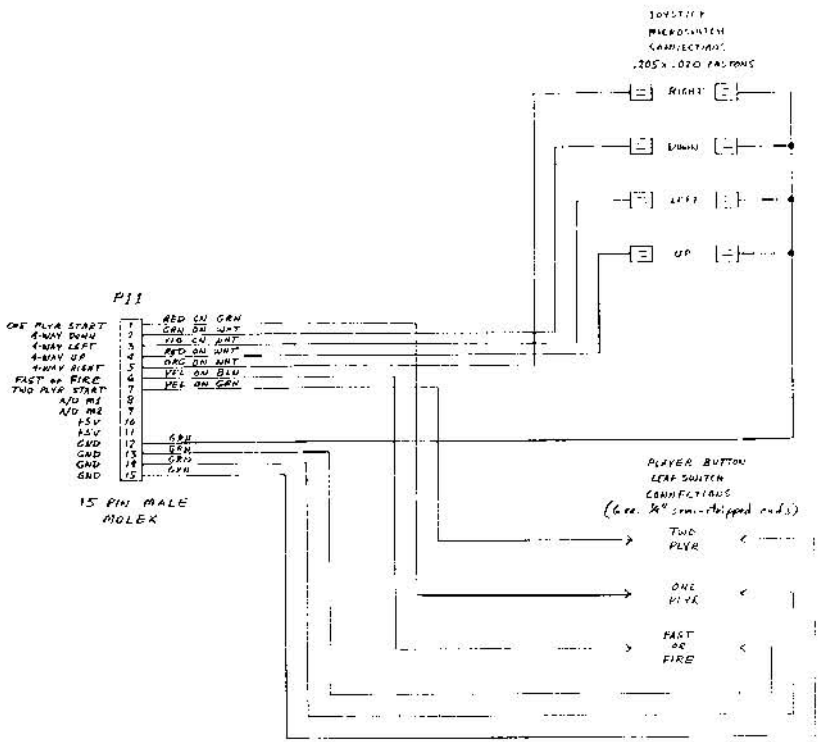

NOTES:
1. All wires 22 awg insulated unless otherwise specified.
2. ABSOLUTELY NO SUBSTITUTIONS ON SPECIFIED WIRE COLORS

11 6 79

19

390 JAVA DR SUNNYVALE CA 94086 408-734-6400	D	CONTROL PANEL HARNESS		30-3188

[illegible] HARNESS SCHEMATIC
(UNIVERSAL COIN HARNESS)

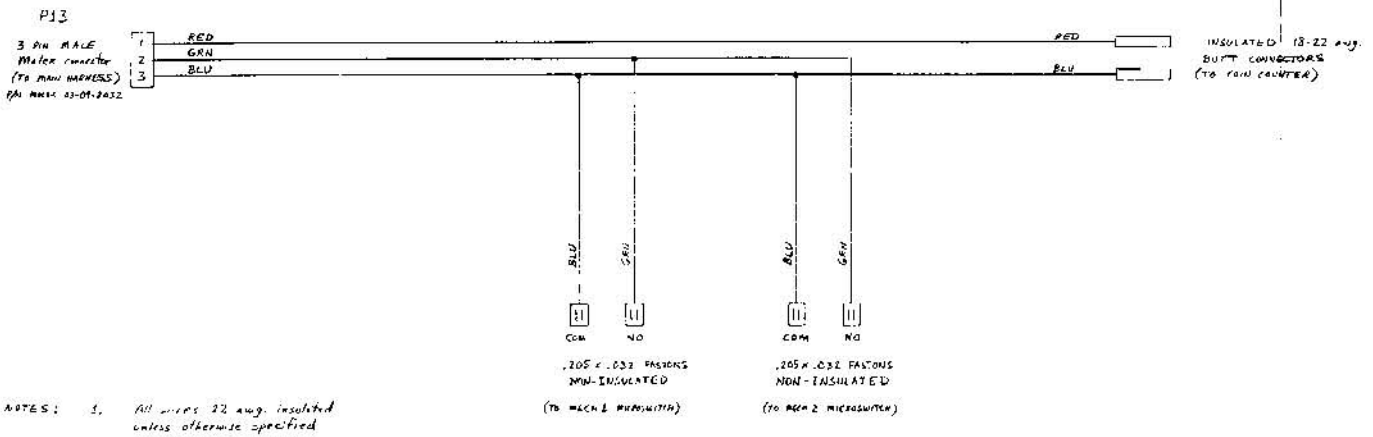

NOTES:
1. All wires 22 awg. insulated unless otherwise specified
2. ABSOLUTELY NO SUBSTITUTIONS ON SPECIFIED WIRE COLORS

390 JAVA DR SUNNYVALE CA 94089 408-734-8419	D	UNIVERSAL COIN HARNESS		30-3189

AC Line Cord Harness Assembly

PART #	DESCRIPTION	REFERENCE LOCATION
71-2070	AC line cord	PL1
60-6020	fuse holder	F1
60-6001	fuse 3AMP slow blo	F1
61-8048	3 pin molex recept	J1
61-8055	individual female pins	J1
88-4002	small tie wrap	
61-8051	fast-on push on terminals.8175"	E1-E2
61-8072	TFB butt splice	E3
	wire list attached	

TARG Audio Assembly

48-2321	741LS139	ID
48-2314	74LS374	2C,2D
48-2071	74LS112	3D
48-2308	74LS161	1A,2A,1B,3B,3A
48-2210	72748 (TI)	6D
48-2342	LM324	5B
48-2215	NE566	4B
48-2212	NE556	5A
48-2221	MC3340	4A
48-2211	LM379 (Dual 6 w audio AMP)	6A
48-2015	7407	4C
48-2302	741S04	IC 3C
47-3005	ZN3904	Q1,Q2,Q3,Q4,Q5
46-3030	IN4454	CR2,CR3,CR4,CR1
59-5110	2.2 K resistor 1/4w 5%	R7
59-5100	3.3 K resistor 1/4w 5%	R14
54-5021	100K potentiometer	R35
54-5019	10K potentiometer	R1,R10,R22,R23, R29,R38
59-5070	22K resistor 1/4 w 5%	R20,R30,R19, R31,R36,R37
59-5125	1K resistor 1/4 w 5%	R33,R40,R45,R13
59-5163	820K resistor 1/4w 5%	R41
59-5025	1meg ohm resistor 1/4w 5%	R9-R16,R17,R42, R47, R50
59-5055	47K resistor 1/4w 5%	R43
59-5080	10K resistor 1/4w 5%	R8,R12,R34,R41, R48
59-5140	100 ohm resistor 1/4w 5%	R44
59-5086	6.8K resistor 1/4w 5%	R11
59-5069	120K resistor 1/4w 5%	R4,R24,
59-5050	68K resistor 1/4w 5%	R3
59-5120	1.2K resistor 1/4w 5%	R2,R25,R5
59-5095	4.7K resistor 1/4w 5%	R21,R49,R6
59-5045	100K resistor 1/4w 5%	R28,R15
59-5040	150K resistor 1/4w 5%	R26

AC Line Cord Harness Assembly, cont.

PART #	DESCRIPTION	REFERENCE LOCATION
59-5030	560K resistor 1/4w 5%	R27
59-5065	33K resistor 1/4w 5%	R18,R39
23-4030	.22uf ceramic disk capacitor	C41,C44
23-4035	.1uf ceramic disk capacitor	C9,C12,C17,C31,C32 C34,C37,C42,C43
21-4015	6.8uf dipped tantalum capacitor 25v	C14,C21,C22,C36 C40,C46,C47,C50
21-4020	2.2uf dipped tantalum capacitor 15v	C48,C49
23-4070	22pf ceramic disk capacitor	C45
23-4060	.001uf ceramic disk capacitor	C11,C13
23-4050	.01f ceramic disk capacitor	C1,C2,C3,C4,C6,C7, C8,C16,C24,C25,C27 C23,C30,C33,C38, C39
21-4010	33uf dipped tantalum capacitor 25V	C19,C20,C28,C5,C29
22-4025	.47uf dipped tantalum capacitor 25v	C15,C10,C35
61-8042	10 pin female connector	J2,J3
68-3041	thermalloy 6072 heat sink	6A for use only with LM379
74-2506	4-40 x 1/4" machine screw	6A heatsink
72-3025	dip package shunt-16 pin amp p-n 435704-8	6B
74-5065 or	y:32 x 5/8" nylon standoff	between logic and audio PCB's
74-5075	6-32 x 1/2" nylon standoff	"
77-3371	TARG audio [bare] PCB	
47-3505	6-32 x V4 machine screw	board mounting
23-54040	.047uf ceramic disc cap	C76
48-9124-01	6331 PROM [MMI] program #HRA 2B-1	2B

Universal Power Supply PCB

77-3190	printed circuit board
20-4000	4000 uf 50v axial lead capacitor
21-4010	33uf 35v dip tantalum capacitor
21-4015	6.8uf 35v dip tantalum capacitor
46-3016	60SI diode
47-3004	MDA 970-I bridge rectifier
47-3041	2N3055 transistor
47-3011	2N6246 transistor
48-2337	7905T negative 5v LM320T-5 regulator
48-2217	7912T negative 12v LM320T-12 regulator
48-2338	7812T positive 12v LM340T-12 regulator
68-3041	thermalloy 6072 heat sink

Universal Power Supply PCB, cont.

PART #	DESCRIPTION	REFERENCE LOCATION
68-2038	thermalloy 6015 heat sink	
61-8010	12 pin male molex	
74-2514	4-40 x 3/8 phillips pan head machine screw	
74-5216	#4 flat metal washer	
74-5191	#4-40 kep nut	

Monitor Isolation Transformer Assembly

FR 63-4029	isolation transformer midwest 773P7	
61-8058	molex connector 03-09-2032	AC input P22
61-8054	male molex pins 02-09-2118	P22
61-8057	molex connector 03-09-1023	AC to monitor J23
61-8055	female molex pins 02-09-1118	J23

6502 Game Logic PCB Assembly

48-2000	IC 7400	3D 15H
48-2005	IC 7402	1H 6H 8F
48-2010	IC 7404	ID 3F 4D 10F 11F
48-2015	IC 7407	2C
48-2020	IC 7408	5E
48-2332	IC 74LS11	3H
48-2035	IC 7420	2F
48-2316	IC 74LS21	12F 15E
48-2045	IC 7427	7F 2H
48-2055	IC 7432	6F
48-2067	IC 7474	IC 5H
48-2071	IC 74LS112	2E 6E
48-2307	IC 74LS138	5B 5D
48-2321	IC 74LS139	73 16H
48-2090	IC 74157	14A 14E
48-2095	IC 74161	1E 2D 4F 5F
48-2100	IC 74166	12B 12D 13D 14D 15D
48-2115	IC 74193	10E 12E 13F 15F 14F 16F 11E 13E
48-2328	IC 74LS241	8C 1A 3A 3B 4H 6B 7D 9B 9E 15A
48-2350	IC 74LS 245	3C 4C 6C 15B 13B
48-2314	IC 74LS 374	1F 14B 7C 8E
48-6502	6502 microprocessor	2A
48-2334	2114 [1Kx4] RAM	4A 5A 7B 8B 11C 12C 13C 14C
48-9125-01	2708 EPROM [1Kx8] HRL 110-1	11D [use w/ hdwe moving objects]
48-9099-01	6331 PROM [32x8]	6D

6502 Game Logic PCB Assembly, cont.

PART #	DESCRIPTION	REFERENCE LOCATION
48-9099-02	6331 PROM [32x8]	14H use w/ hdwe moving objects
48-9099-04	6301 PROM [256x4]	5C
46-3025	IN4002 diodes	8F 9E
59-5135	470 ohm resistor v4w 5%	1D
59-5120	1.2K ohm resistor 1/4w 5%	2C 7H
59-5115	1.8K ohm resistor 1/4w 5%	1C 2C
59-5110	2.2K ohm resistor 1/4w 5%	2A
59-5105	2.7K ohm resistor 1/4w 5%	1C 2C 5H
59-5095	4.7K ohm resistor 1/4w 5%	5H
59-5080	10K 1/4W 5% resistor	7H
51-0003	220ohm 1/4 w 5% 8 pin resistor sip	9E
51-0002	2.2K 1/4w 5% 8 pin resistor sip	16A
51-0001	4.7K 1/4w 5% 8 pin resistor sip	15A
51-0004	6.8K 1/4w 5% 8 pin resistor sip	14A
23-4033	.01mf ceramic disc capacitor	1D
23-4035	.1mf ceramic disc capacitor	air (per Assy dwg)
20-4011	6.8uf dipped tantalum capacitor 25v	1C 6E 15D 6H
20-4014	33uf dipped tantalum capacitor 25V	1C 2C
20-4005	470uf 10v electrolytic capacitor	10H
72-3025	dip shunt jumper paks 16 pin	4B 10B 10D 11B
72-3042	8pos dip switch	16A
45-3036	11.289 mhz crystal	1D
61-8041	10 pin male molex connector	16C 16E
61-8062	16 pin low profile dip sockets	3E 4E 5C 6C 14H
77-3361-14	printed circuit board	
61-8045	24 pin low profile dip sockets	9A 10A 11D 6A 7A 8A
61-8035	40 pin low profile dip socket	2A
61-3060	14 pin low profile dip socket	16B
48-9126-04	2716 EPROM programmed HRL 6A-1	6A
48-9126-03	2716 EPROM programmed HRL 7A-1	7A
48-9126-02	2716 EPROM programmed HRL 8A-1	8A
48-9126-01	2716 EPROM programmed HRL 9A-1	9A
48-9126-05	2716 EPROM programmed HRL 10A-1	10A

6502 Color Adapter PCB Assembly

PART #	DESCRIPTION	REFERENCE LOCATION
48-2080	IC 74151	5A 5B 5C
48-2305	IC 74LS74	1A
48-2321	IC 74LS139	2A
48-2079	IC 74148	2B
48-2341	IC 74LS86	1C 6A
48-2333	IC 74LS174	6B
20-4011	6.8uf dipped tantalum capacitor	C1
59-5136	resistor 330 ohm 1/4w 5%	R1THRU R10
59-5103	9 pin sip resistor pak 1Kohm	3A 3B 3C
23-4033	.01uf ceramic disc capacitor	C2 C4 C5 C6
61-8203	10 pin male molex connector .156 center	P2
61-8127	14 pin socket stan-profile w/lock	J1
77-3373	printed circuit board	