1072

the Leland CORPORATION

VIPER™

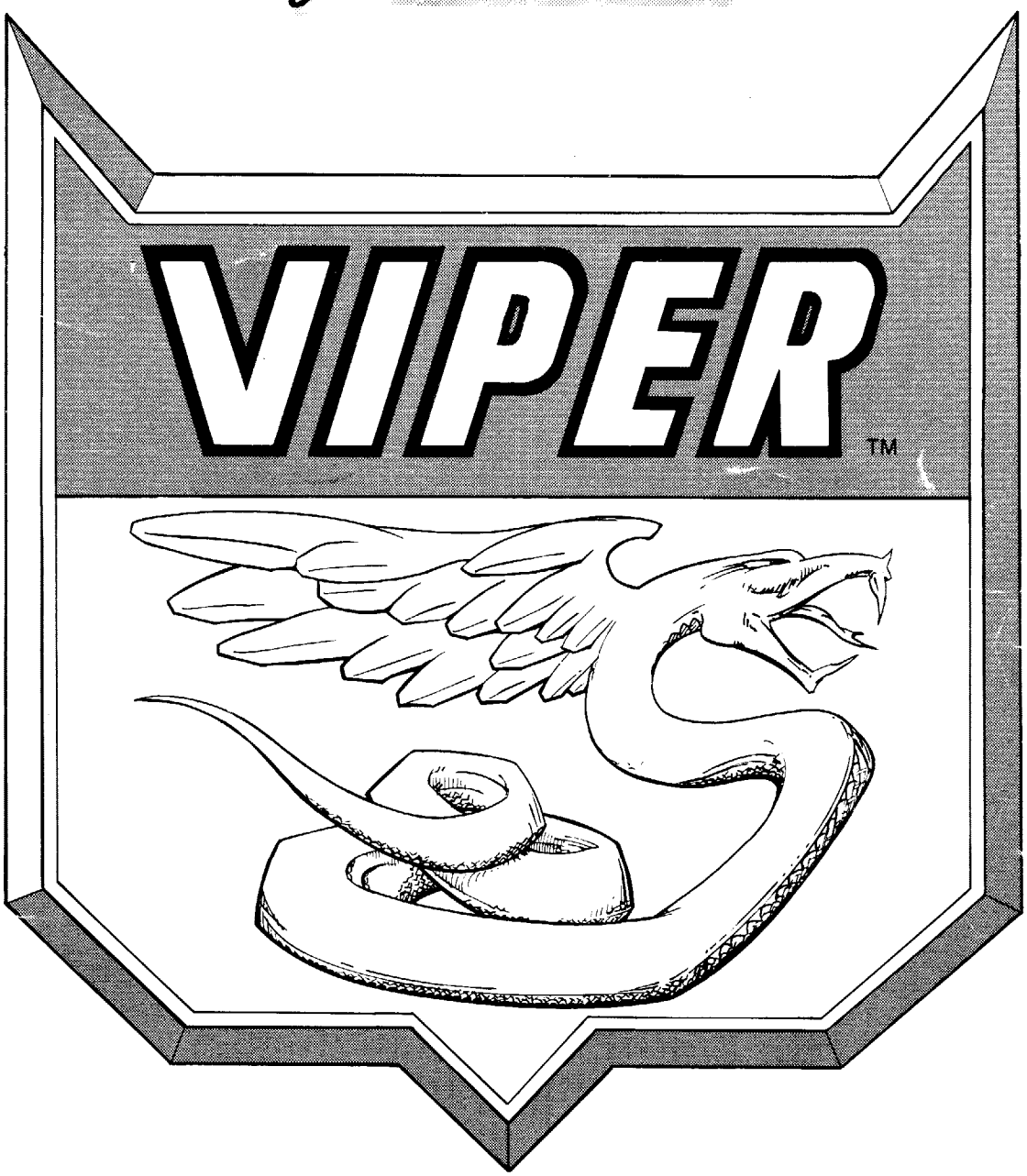

SERVICE & INSTALLATION MANUAL

FCC WARNING

This equipment generates, uses, and can radiate radio frequency energy and if not installed in accordance with the instructions manual, may cause interference to radio communications. It has been tested and found to comply with the limits for a class "A" computing device pursuant to subpart "J" of part 15 of the FCC rules, which are designed to provide reasonable protection against such interference when operated in a commercial environment. Operation of this equipment in a residential area is likely to cause interference, in which case the user, at his own expense, will be required to correct the interference.

NON-LELAND REPLACEMENT PARTS NOTICE

The Leland Corporation recommends the use of only Leland Corp. parts when replacing any malfunctioning component or assembly in your video amusement machine. For safety and reliability, the Leland Corp. does not recommend or authorize any substitute parts or modifications of Leland Corp. equipment. Such alterations may adversely affect game play or cause serious injury, and *will* void your warranty. Unauthorized parts, modifications and non-Leland Corp. game conversion parts may also void FCC compliance.

OPTIMIZE YOUR PROFITS

Our research shows that a two minute quarter both satsifies the player and keeps the quarters flowing. This game is equipped with a very sophisticated diagnostics program. Refer to your Diagnostics Manual to set your game for maximum appeal and profit.

MACHINE INFORMATION: PURCHASE DATE:_____/_____/_____

DISTRIBUTOR: _____

GAME NAME: _____

SERIAL NUMBERS_____ PROGRAM: _____

MAIN BOARD:_____ I/O BOARD: _____

EXPANSION BOARD:_____ CABINET: _____

VIPER
SERVICE AND INSTALLATION MANUAL
TABLE OF CONTENTS

ITEM	PAGE NUMBER
FCC Warning	INSIDE FRONT COVER
Non-Leland Replacement Parts Notice	INSIDE FRONT COVER
Optimize Your Profits	INSIDE FRONT COVER
Machine Information	INSIDE FRONT COVER
Care and Feeding	2
Warranty Information	3
Viper Kit Installation Procedure	4
Action System PCB Conversion Diagram	6
To: The Tech	7
Troubleshooting Flow Chart	8
Troubleshootist's Section	
1. A Note About Power	9
a. DC Power	9
b. AC Power	9
2. Our Service Department	9
3. General Shooting	
a. Garbage	10
b. No Sound	10
c. No Control Or Function Switches	10
4. Monitor Shooting	
a. No Picture	10
b. Bad or No Sync	10
5. Buffers	10
About Mechanical Coin Counters	11
Bookkeeping and Diagnostics	
1. Main Menu	12
2. Bookkeeping	13
3. Diagnostics Menu	14
a. Buttons and Controls Test	15
b. Processor Memory Test	16
c. Video Alignment Test	17
d. Video Memory Test	18
e. Audio Subsystems Test	18
f. Background Screens	19
4. Game Set-Up	19
5. Hall of Fame	20
6. Game Duration Statistics	20
Diagrams and Schematics	
1. AC DC Power Connections	21
2. Action Cabinet Wiring Diagram	INSIDE REAR COVER
3. Action Cabinet / With Seat	22
4. Control Panel and Power Supply Assemblies	23
5. Vertical Mounting and Motion Assembly	24
6. Horizontal Mounting and Motion Assembly	25
7. Switching Power Supply	26
8. Rom Expansion Board Diagrams	27
9. Multi-Function Board Diagrams	29
10. Main Logic Board Diagrams	42
11. Monitor Schematic	CENTERSPREAD

THE CARE AND FEEDING OF A VIPER
CONGRATULATIONS

With the purchase of a new VIPER game or mod you've become a member of TEAM LELAND. This membership enables you to enter a world of dependable products, quick and efficient customer service, and worry-free operation, seldom experienced in this world of "throw away" and "planned obsolescence".

A little cleaning and a few checks after each collection will keep your new game a steady earner for a long time to come.

FIRST: THE SET-UP

(If you have a mod for Danger Zone, go to the Kit Installation Section)

After unboxing the game and before plugging it in, check the cabinet for dings, scratches, or gouges and notify both the delivery agent and your distributor of anything you find that does not meet with your approval.

Unlock the cashbox and check the game for the following items:

1. Power Cord
2. Back Door Keys
3. Action Seat Mounting Screws

Got it? Good.

Check inside the back of the game for loose ICs on the board, loose connectors, or anything else that just doesn't seem right.

NEXT: THE POWER

All set? Well then plug that puppy in (grounded outlet only please!), turn it on (the interlock switch is inside the back door), and check for smoke. When the picture comes up, go to the bookkeeping and diagnostics section of this manual and go through every function. Check for proper settings, clean and adjust the monitor (VERY IMPORTANT!), and adjust the sound.

FINALLY: THE PLAY

Now PLAY THE GAME!!!!

Play it a few times. When you are sure that it works and is set to your satisfaction, it's time to make some bucks.

EACH COLLECTION: THE UPKEEP

Check the Bookkeeping and Game Duration Statistics to see how well your Game Set-Up options are working. Do some tinkering if you don't like what you see.

Make sure the game is clean and working properly. (HINT: Put a couple of coins through each coin mech to check for proper operation and play a game.)

GOOD LUCK - GIVE US A CALL - WE'D LIKE TO HEAR WHAT YOU HAVE TO SAY!!

THE LELAND CORPORATION WARRANTY

The Leland Corporation warrants that whenever the video display (monitor) and/or the power supply and/or the printed circuit boards and/or all parts contained therein are furnished with its product, that such part or parts will be free from defects in materials and workmanship for a period of sixty (60) days from date of shipment. The Leland Corporation's warranty of above parts is subject to the normal use and service of its product. No other products or parts thereof are warranted. If the products described in this manual fail to conform to this warranty, the Leland Corporation's sole liability shall be, as mutually agreed, to replace or repair such products which are returned to The Leland Corp. during stated warranty period, provided:

a. The Leland Corp. is notified in writing upon discovery by buyer that said products are defective.
b. The defective product or part is returned *pre-paid* to The Leland Corp. plant with a Leland Corp. *R*eturned *M*erchandise *A*uthorization (RMA) number clearly visible on the outside of the package.
c. An Operator Service Card is on file at The Leland Corp. plant or is included in the package for all returned printed circuit boards.
d. The Leland Corporations' examination of returned products determines to our satisfaction that the alleged defects existed and were not caused by accident, misuse, neglect, alteration, improper repair, installation, or testing.

The Leland Corp. is not responsible for bent pins on ICs not installed by our employees. In no event shall The Leland Corp. be liable for loss of profits, loss of use, incidental or consequential damages.

EXCEPT FOR THIS WARRANTY, THE LELAND CORP. DISCLAIMS ALL OTHER WARRANTIES, EXPRESSED OR IMPLIED, INCLUDING THE IMPLIED WARRANTIES OF MERCHANTABILITY AND FITNESS FOR A PARTICULAR PURPOSE, AND ALL OTHER OBLIGATIONS OR LIABILITIES ON THE LELAND CORPORATION'S BEHALF, AND IT NEITHER ASSUMES NOR AUTHORIZES ANY OTHER PERSON TO ASSUME FOR THE LELAND CORP. ANY OTHER LIABILITIES IN CONNECTION WITH THE SALE OF PRODUCTS MANUFACTURED BY THE LELAND CORP.

VIPER KIT INSTALLATION PROCEDURE

Calm Yourself. This could be one of the easiest conversions you've ever done. Just take this thing one step at a time.

FIRST: Disassembly.
Remove the following items from your old Danger Zone cabinet.

1. Printed Circuit Assembly
2. Complete Coin Door Assembly
3. 1 & 2 Player Buttons
   (NOTE: Loosen but *DO NOT REMOVE* the two Joystick Assemblies.)
4. All Danger Zone Graphics (A little Lacquer Thinner will save a lot of elbow grease.)

SECOND: The Board. (See Action Cabinet PCB Conversion Diagram)
Grab the old Printed Circuit Assembly and the new Viper electronic parts and set them on a clean and preferably static-free work area (desk, work bench, etc.).

1. Remove the old Danger Zone top board.
2. Using a small slot screwdriver or an IC remover, carefully remove the following IC's from the Main PCB:
   U1
   U3 through U9
   U67 through U70
   U85
   U89 through U95
   U120
3. Insert the following new IC's into their respective locations in the Main PCB:
   U3
   U67 through U70
   U85 (20 pin IC stenciled 0217)
   U89 through U95
   U120 (8 pin IC stenciled 271)
4. Insert the audio jumper socket (28 pin socket with wires soldered in positions 5 & 6) into socket at position U87 on the Main PCB.
5. Insert ribbon connectors into positions U1 & U99 on the Main PCB.

NOTE: In all of the above insertion operations, DOUBLE CHECK each device for proper orientation and pin placement!

6. Using the supplied hardware, mount the new Multi-Function PCB and ROM Ext. PCB in the positions shown.

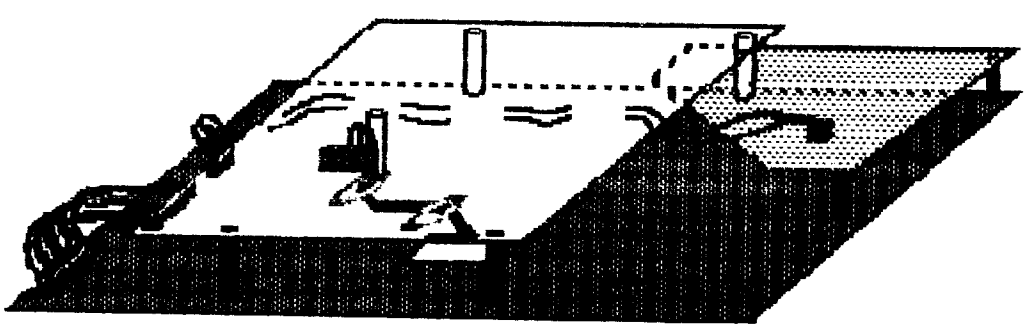

VIPER PCB MOUNTING DIAGRAM

7. Insert Z890 (removed from U1 on the Main PCB) into the socket at positon U1 on the ROM Ext. PCB.
8. Attach audio jumper from Main PCB to the designated connector on the Multi-Function PCB.
9. Attach power jumper from the Multi-Function PCB to the ROM Ext. PCB.
10. Connect Main PCB power jumper and both ribbon connectors.

THIRD: The Cabinet. (See Action Cabinet / With Seat Illustration)
After removing the old graphics, install the new Viper graphics and remount the Coin Door Assy. Install the "Dst Tray" and mount the Action System Seat.

HINT: When applying the control panel graphics do not remove the joysticks. Simply pre-cut the joystick holes in the new graphic and cut a line from these holes to the nearest edge of the graphic. Then peel the backing from the top portion of the graphic, align the joystick holes and adhere the graphic. Now peel and stick the rest of the graphic.

STOP HERE --- GO OVER EVERYTHING YOU'VE DONE THUS FAR.

All OK? Fine, you're almost done.

Vacuum all the dust and stuff out of the cabinet.
Clean the monitor.
Install the new PCB set.
Tighten up the control panel.
Plug 'er in and power-up.

GOOD PICTURE?
If not, adjust it now and as long as you are going to be in diagnostics to adjust the picture, check out the other functions. Do the controls work? Are the Bookkeeping and Game Set-Up sections to your liking?

Last but not least - PLAY THE GAME!

We at The Leland Corp. would like to thank you for your support and would like to hear any questions or comments that you might have. Our goal is to produce the very best amusement products in the world and we invite your input.

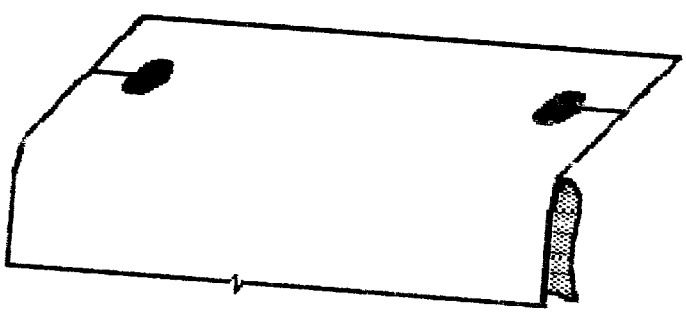

LELAND CORP. ACTION SYSTEM PCB CONVERSION DIAGRAM

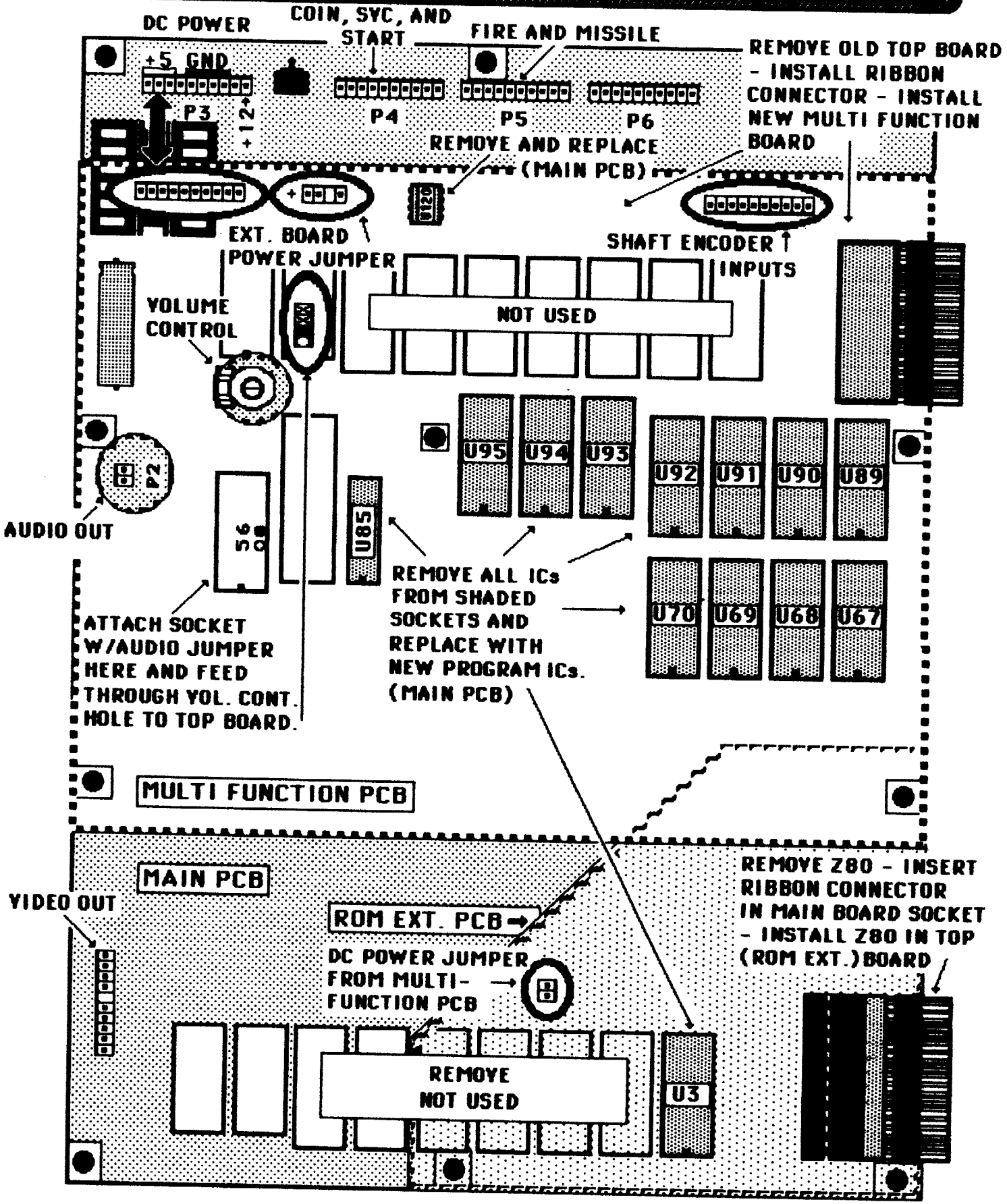

TO: THE TECH

FROM: THE GUY THAT WROTE THIS MANUAL

First of all, that little card that fell out when you opened this manual is your operator service card and we would appreciate it if you would take a couple of minutes to fill it out and send it to us with your comments. It is also a good idea to record the serial number information in the space provided at the front of this manual for future reference.

Next, this manual is not written for the "bench" technician except for the fact that we do include board layouts and schematic diagrams. As you are well aware, most of the problems incurred in the field are *not* board related. If you have double checked all the wiring, the power supply, the monitor, and where possible, "swapped" boards and have narrowed a problem down to the board, give us a call and our crack customer service department will get you going.

Because of solid state electronic circuitry, this game should require very little maintenance and only occasional adjustments. The majority of the problems encountered by field service technicians are of a type easily remedied, provided said technicians have at least a working knowledge of coin-operated amusement devices, the proper tools, and last but not least, a good attitude and a neat appearance.

FIRST: Approach the proprietor or attendant with a friendly greeting - "Good morning! And how are you on this fine and cheery morning?"
SECOND: List your credentials and purpose - "I'm _____ from _____ and I understand that one of our/your amusement machines is not functioning properly."
THIRD: Find out as much as possible about the problem before you approach the game - "I know that you are a busy man (or young lady) but if you would please explain exactly what the machine is doing or not doing that prompted your concern, I would be very grateful."

REMEMBER, YOU ARE A PROFESSIONAL!

Now that you've made a favorable impression and obtained a few facts, we can get down to brass tacks. (Which reminds me, be sure to check for foreign objects on the board.)
When examining an ailing machine, you may want to use the following flow chart as a foundation on which to build your troubleshooting approach.

TROUBLESHOOTING FLOW CHART

DON'T TOUCH THAT SWITCH !!!

Before you reach for the power switch take a good look at the game. Open it up and check for loose wires, bad connections, or burned spots. Look for spilled drinks and signs of vandalism. These quick checks will save you a lot of time.

After you've eliminated the obvious, start digging.

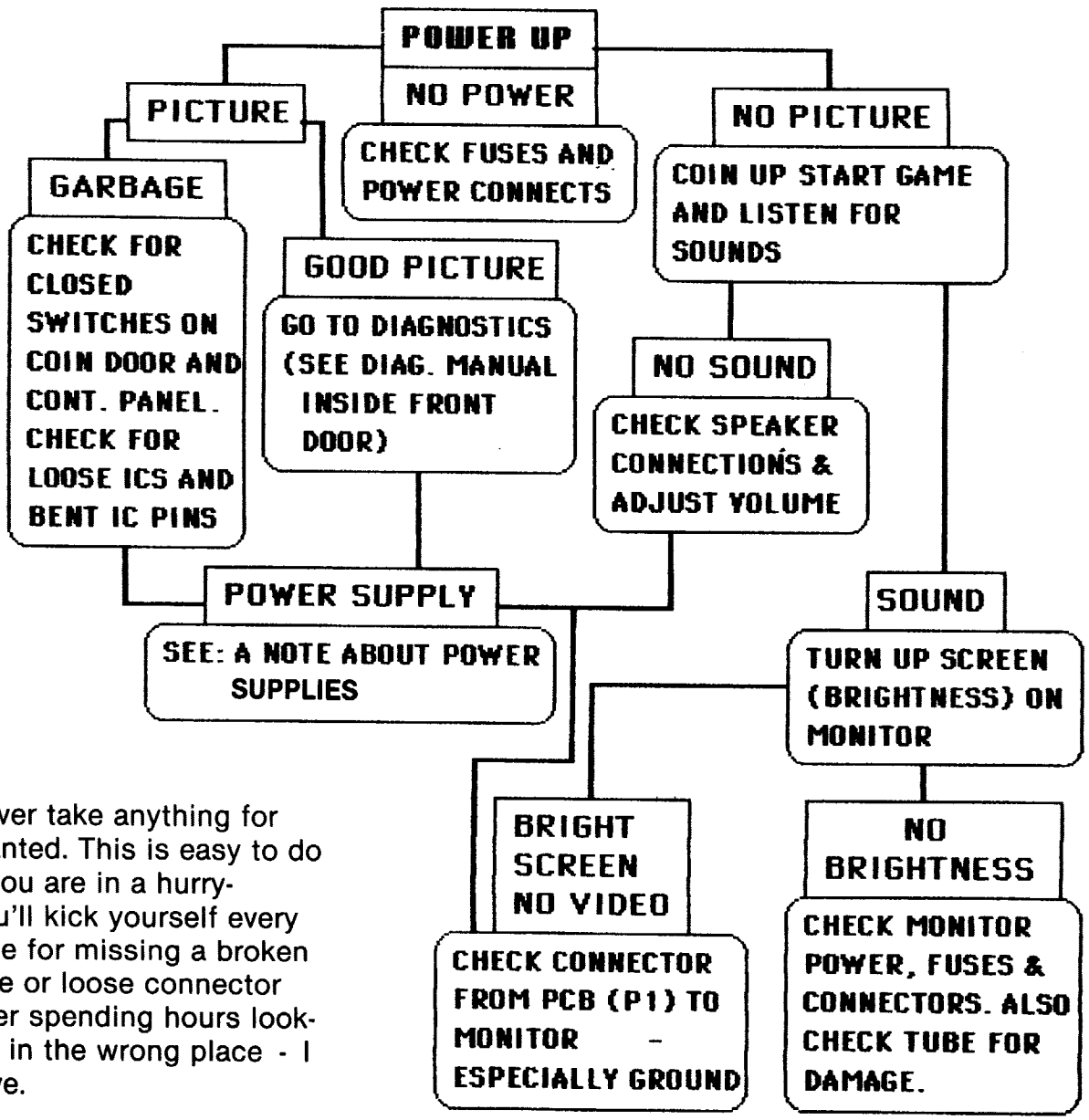

Never take anything for granted. This is easy to do if you are in a hurry- You'll kick yourself every time for missing a broken wire or loose connector after spending hours looking in the wrong place - I have.

THE TROUBLESHOOTIST'S SECTION

A NOTE ABOUT POWER

DC POWER

The computer board in this machine operates most efficiently when the power supply is providing a steady +5.1VDC (±0.05VDC). When checking DC power always put your leads across the power inputs on the main board and be sure that the +5 volt supply is between +5.05VDC and +5.15VDC. Also be sure that there is less than .005 volts AC riding on the +5 volt line. If you do find AC on the DC line, suspect the filter capacitor or the rectifier on the power supply. Low voltage or AC on the DC lines is the main cause of the following problems:

*"Garbage" on the screen.
*Computer "Freeze".
*Coin or Coin Meter malfunction.
*A variety of seemingly unrelated problems.

AC POWER

Connect this game only to a grounded three-wire outlet which provides between 108 and 132 volts AC. If you have only a two-wire outlet we recommend that you hire a licensed electrician to install a grounded outlet. The possibility exists that players may receive an electrical shock if this system is not properly grounded.

OUR SERVICE DEPARTMENT

For parts, service, and technical information first contact your authorized Leland Corporation distributor. For additional technical aid feel free to contact The Leland Corp. Customer Service Department at *(619) 562-7000* Monday through Friday from 8:00 AM to 5:00 PM Pacific Standard Time. To provide you with the quickest possible response to your questions, please have the following information ready when you call:

1. Your game name and serial number.

2. Any reference materials and a list of observations.

GENERAL SHOOTING

GARBAGE
Check:
Power supply voltages.
Closed switches on control panel or coin door.
Loose connections or loose chips on board.

NO SOUND
Check:
Loose connections.
Low + 12 volt supply.
Bad speaker or pot.
(See BUFFERS)

NO CONTROL OR FUNCTION SWITCHES (Including coin switches)
Check:
Loose connections or broken wires. (Be sure to check ground connections and wires.)
Closed switch.
Input Buffer. (Follow edge connector trace to the first chip on the board.) - (See BUFFERS)

MONITOR SHOOTING

NO PICTURE
Check:
Power connection.
Blown monitor fuse.
Video connection. (Check for continuity.)
Turn up screen control and check for brightness.
Broken tube or neck board.

BAD OR NO SYNC
Check:
Sync and ground connections.
Sync polarity.
If your monitor will not handle negative sync you may have to install the following inverter circuit.
(See BUFFERS)

BUFFERS

An I/O buffer is the component that connects the actual computer to the outside world and, as such, is the part most likely to fail. Check the following list when attempting to isolate possible problems. First and second choices are given. (M = Main Board, I/O = Multi Function Board.)

NOTE: ANY UNAUTHORIZED *BOARD REPAIR OR ATTEMPTED REPAIR WILL VOID YOUR WARRANTY.*

PROBLEM AREA	*COMPONENT*	*PCB LOCATION*
COLORS OR SYNC	1st 7405 (or 74S05) 2nd 74LS374	M - U24 M - U37
PLAYER CONTROLS NAD/OR COIN INPUTS (See sheet 4 of main pcb schematic.)	1st 150 ohm resistor pack 2nd 74LS257	M - RP3 through RP8 M - U117, U118,& U119
AUDIO (Bad channel- 0 through 5)	1st 7524 2nd 7533	IO -U35(CH5) THROUGH U40 (CHO) I/O - U31

ABOUT MECHANICAL COIN COUNTERS

We have *not* installed a mechanical coin counter on this game for two reasons:

1. The bookkeeping program on VIPER™ is very accurate and includes not only number of coins dropped and dollars earned but also the number of tests and coins in a given period. (See BOOKKEEPING in the DIAGNOSTICS MANUAL.)
2. These mechanical counters produce an inductive "kick" that *will* damage components on the circuit board. Checkerboard video is the most common. To see if this is in fact your problem — take a look at the "NMI not" signal on the master Z80 (pin 17). If a low output is observed, try replacing U114 (74LSO8) and/or U119 (74LS157).

NOTE: *If you must install a coin counter, please use the following diagram. (Diodes may be IN4001 to IN4004).*

HOOK BOTH COIN SWITCHES TO EITHER P4 PIN 5 OR P4 PIN 8.

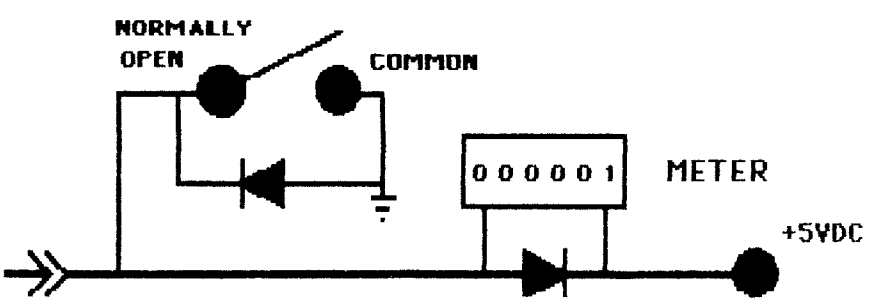

BOOKKEEPING AND DIAGNOSTICS

To enter the Bookkeeping and Diagnostics program:

*Press and hold the 1 Player Start Button.
*Press the Test Button (located inside the front door).
*Release both buttons.

MAIN MENU

Upon entering the program a Main Menu will appear. Follow the instructions on this menu to select and enter the desired function. Notice that the program serial number is also displayed in the bottom left corner of this screen.

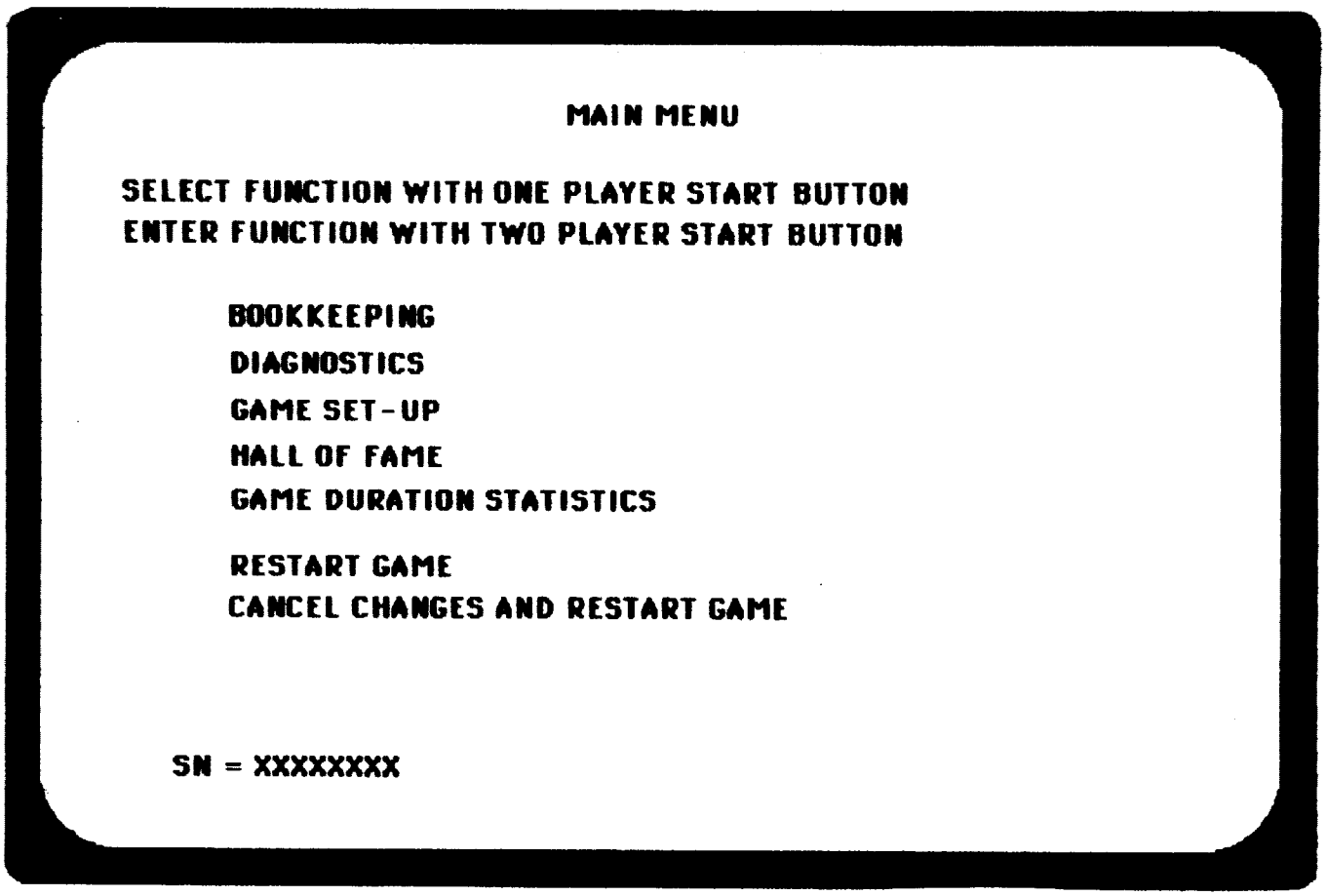

BOOKKEEPING

The Bookkeeping function is your game accountant. It records the lifetime earnings of your game and allows you, through the use of resettable "PERIOD" totals to keep track of weekly, monthly, or location earnings.

NOTE: The "SET COINS/TOKENS PER DOLLAR" category must be set to the location standard to maintain accurate accounting data. (i.e. If the arcade is giving 6 tokens per dollar, the COINS/TOKENS category should be set at "6 COINS PER DOLLAR COIN MECH 1" and 2.)

THIS FUNCTION *DOES NOT* AFFECT THE NUMBER OF COINS PER CREDIT! (See the "GAME SET-UP" section for this information.

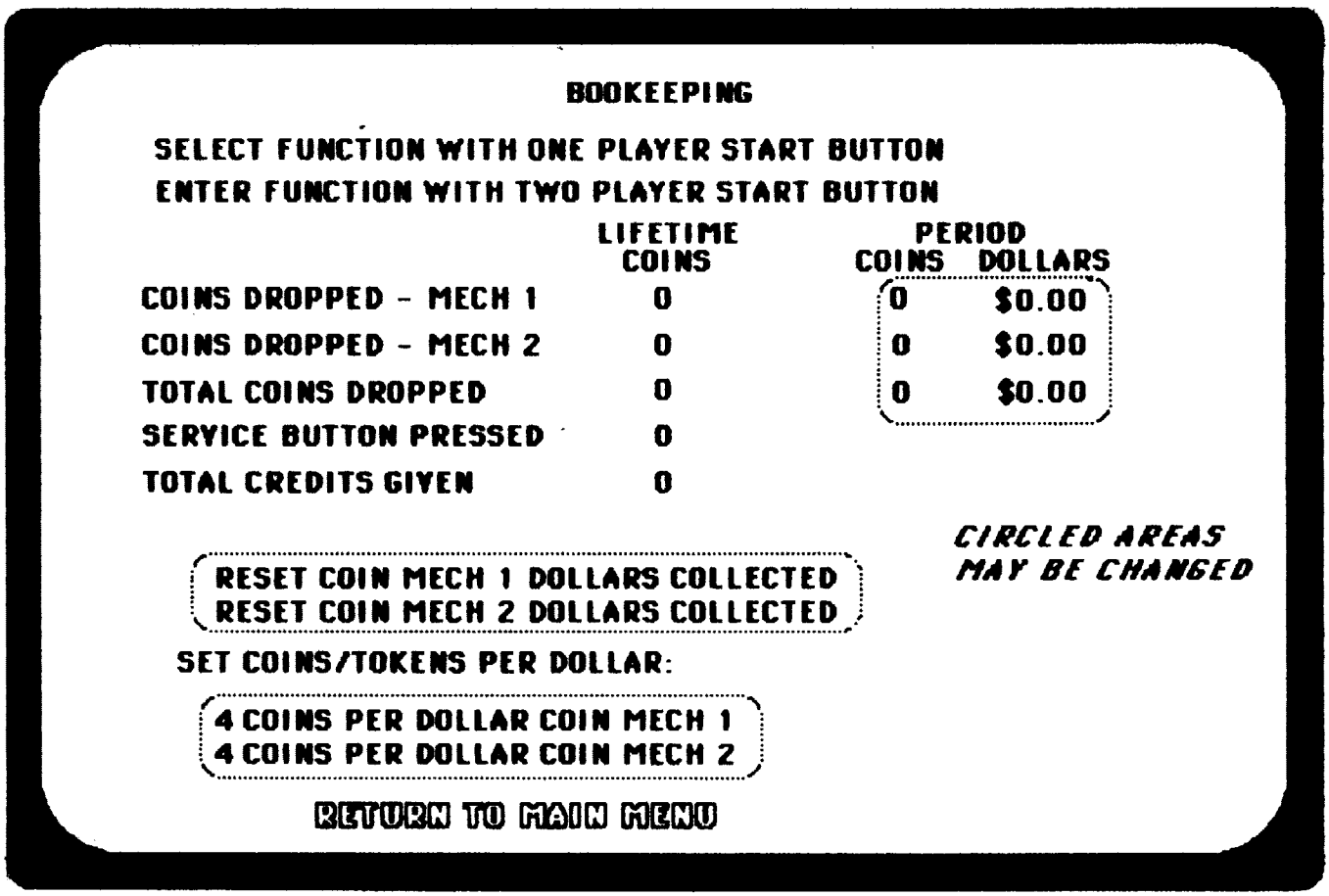

DIAGNOSTICS MENU

Invoking the Diagnostics function will open a very complete and easy-to-use set of tests designed to take the grumbling and hair-pulling out of adjusting, troubleshooting, and servicing your machine.

You will notice that the diagnostics section has a sub-menu of its own, which is intended to help isolate problem areas.

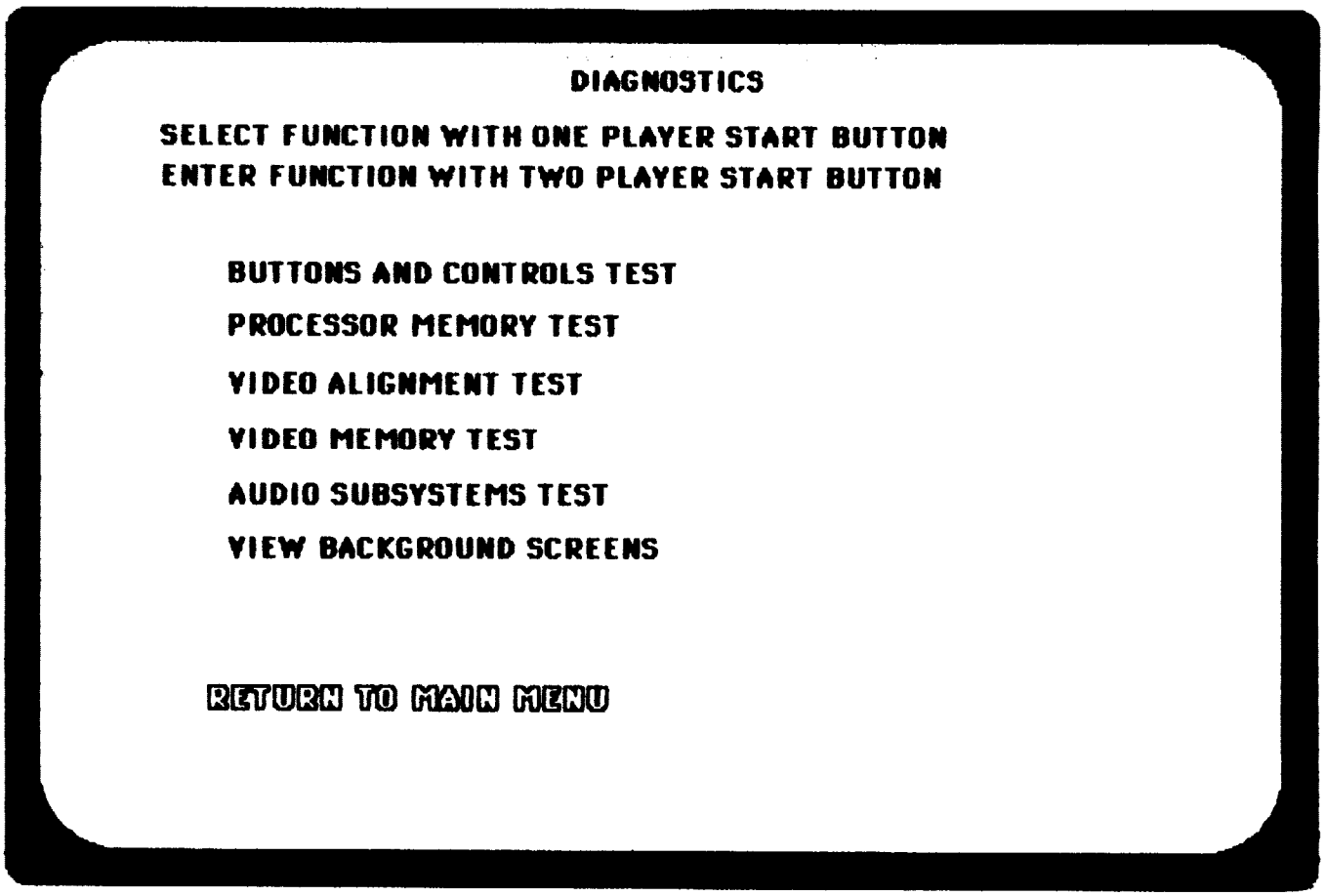

BUTTONS AND CONTROLS TEST

This test provides a quick examination of the state of all buttons and controls as well as an easy range-setting format for the horizontal and vertical position sensors.
There are two types of position sensors.
In the first of these devices, horizontal and vertical indexes or flags rotate through optical sensors to locate the directional middle of the horizontal and vertical movement. Suspect improper positioning of these flags or failure of the associated driver board when the horizontal or vertical scrolling indicators are not centered on the test screen.
The second device, the encoder shaft, senses the amount of horizontal or vertical movement. These encoder shafts must be manually centered and the optimum readings are shown on the test screen. To set either encoder, loosen the mounting bracket enough to allow the small gear to move freely, adjust to the proper reading, and reposition the encoder assembly. Be sure to allow the small and large gears to interact smoothly with each other. DO NOT force them together too tightly.

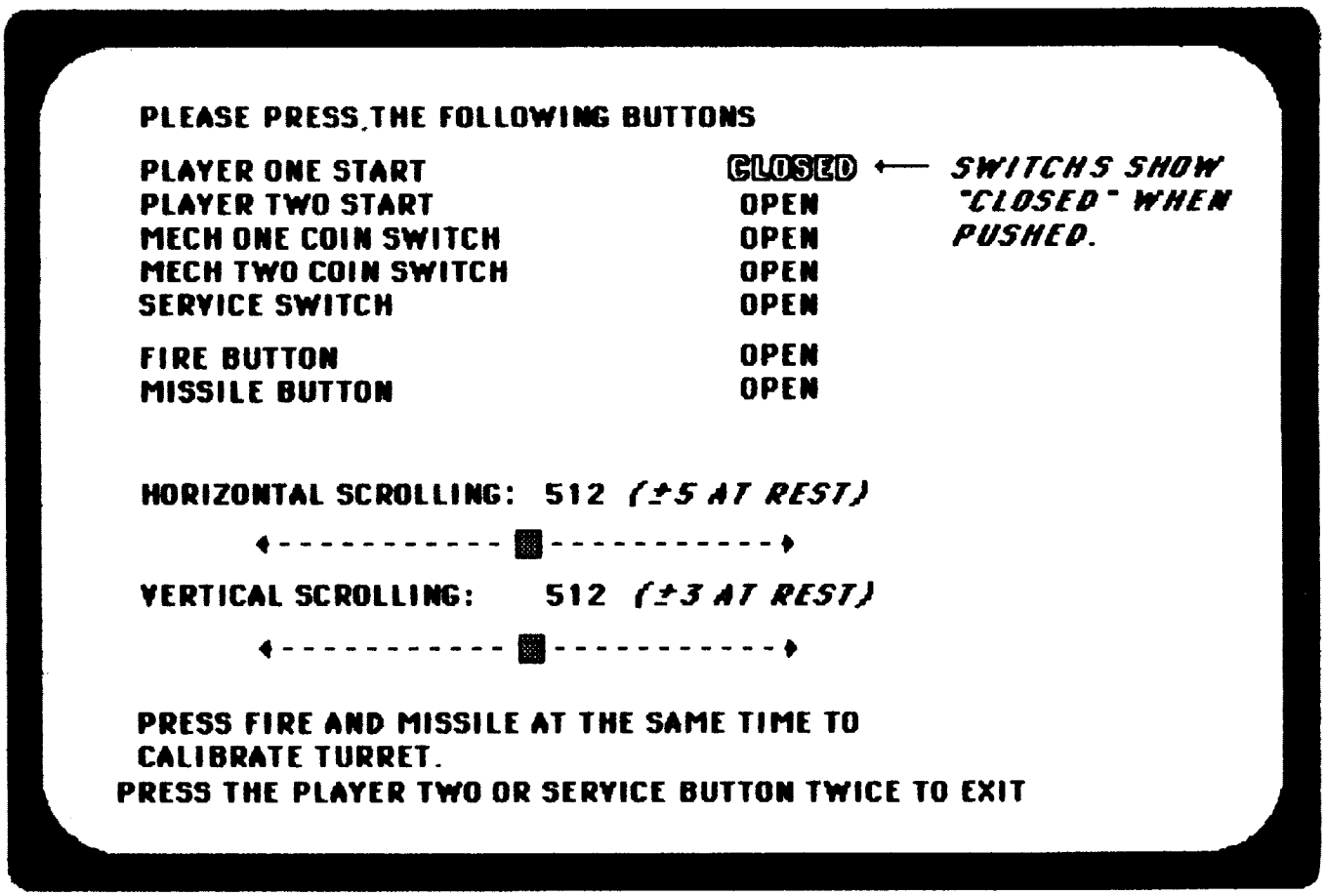

PROCESSOR MEMORY TEST

The *E*rasable *P*rogrammable *R*ead *O*nly *M*emory (EPROM) and *R*andom *A*ccess *M*emory (RAM) chips are storage areas for the actual game guidelines and are accessed by the Microprocessor section. The percentage of field failures in these areas is very low but when problems do arise they can be a bear to track down. This next test samples the action of the processor section and notes any incongruities.
WARNING: Read your warranty before attempting any printed circuit board repairs.

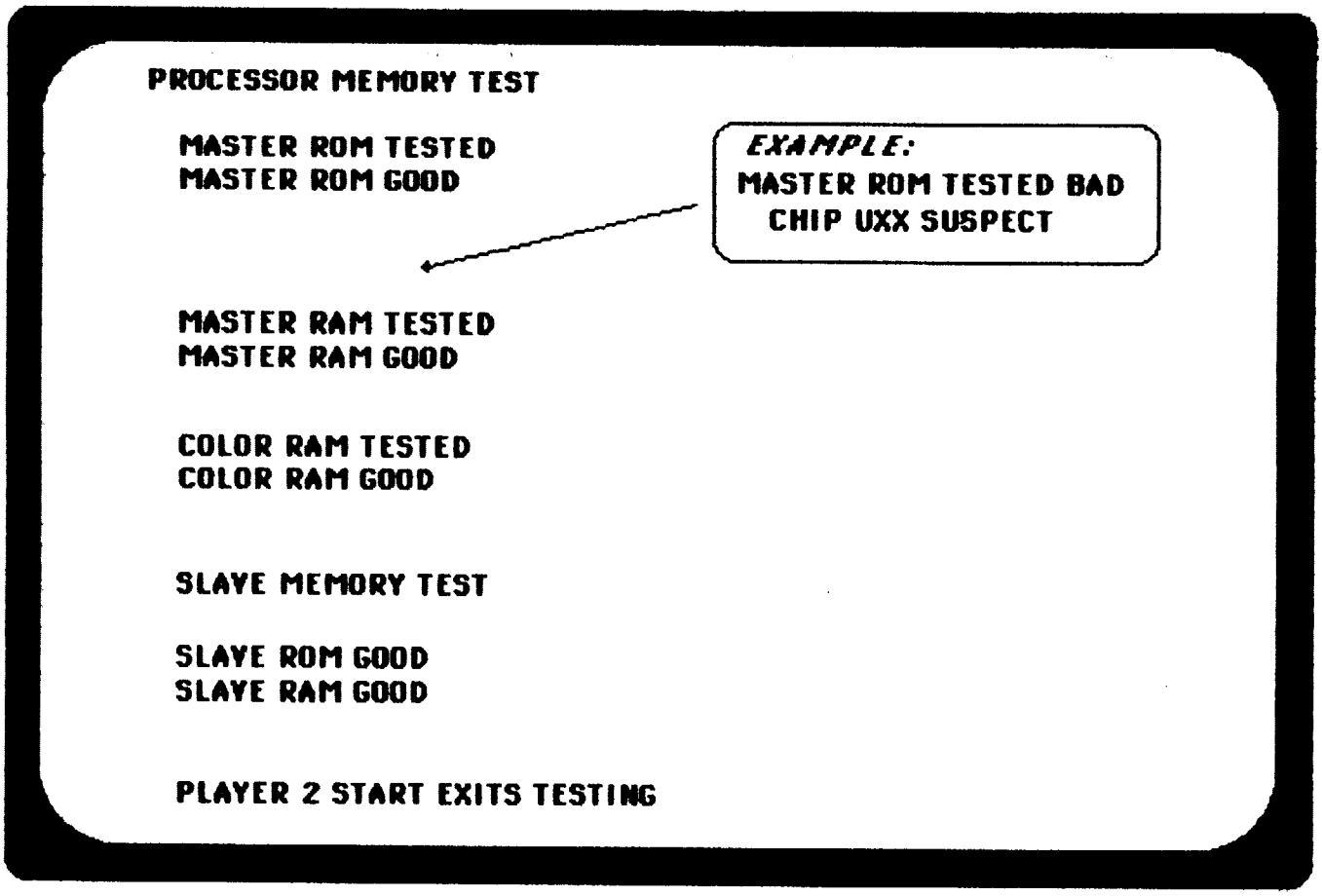

VIDEO ALIGNMENT TEST

The picture on the screen is the most important and the most neglected part of the game. It is a proven fact that a dirty, misaligned, or unfocused screen will cause a player to walk away even if the game is his or her favorite piece.

A little elbow grease and a couple of minutes taken to go through these adjustment screens will make a big difference in the cashbox. Use all three screens to adjust your picture and then go the "Background Screens" section to make sure the game looks *rich*.

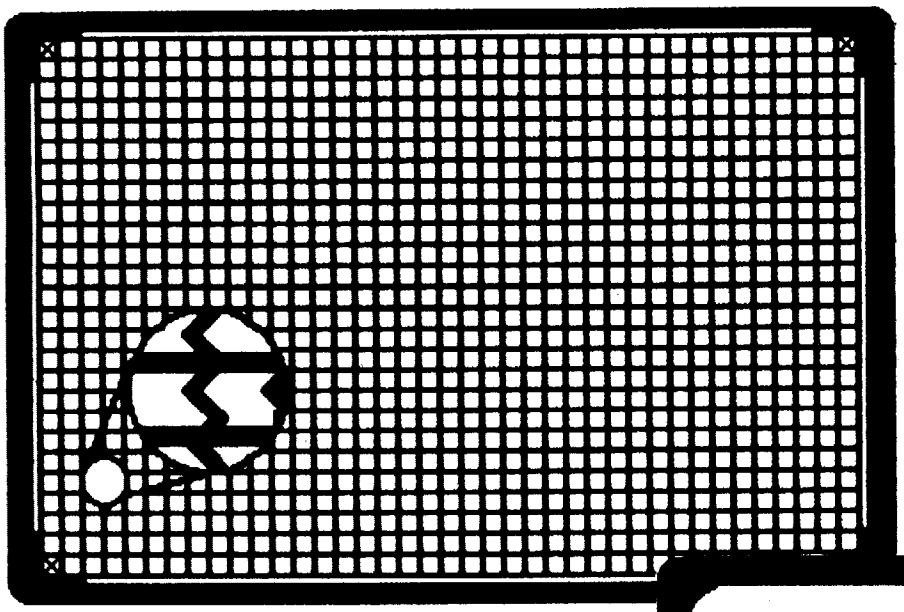

THE CROSS-HATCH SCREEN
Used to adjust focus, size, contrast, convergence, and alignment. Notice the x's in the corners. Wavy horizontal lines (see inset) denote bad contrast. The background should be black and the lines should be white.

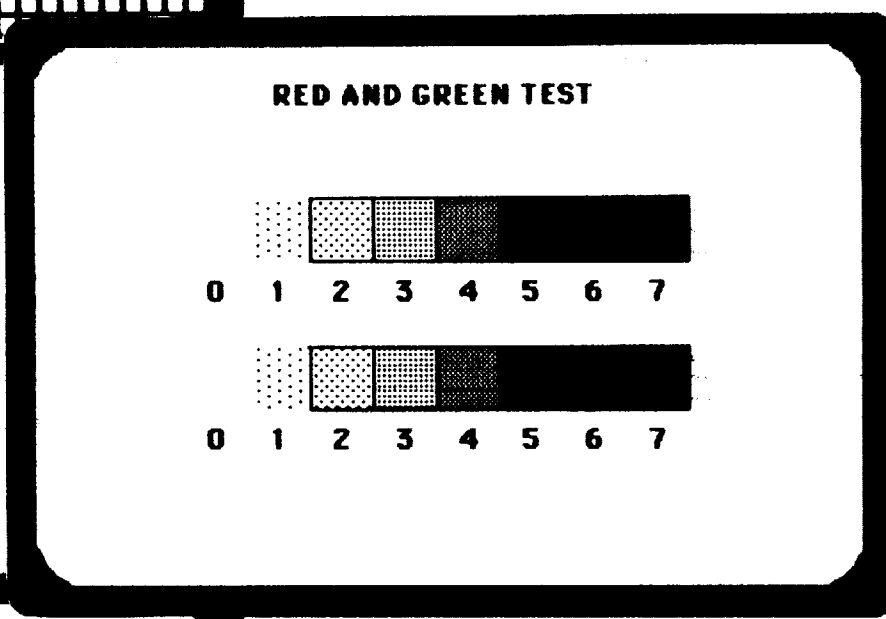

RED AND GREEN SCREEN
Adjust screen control so that the green color bar shows faintly on the one level and then use the red cutoff control to adjust the red to the same intensity.

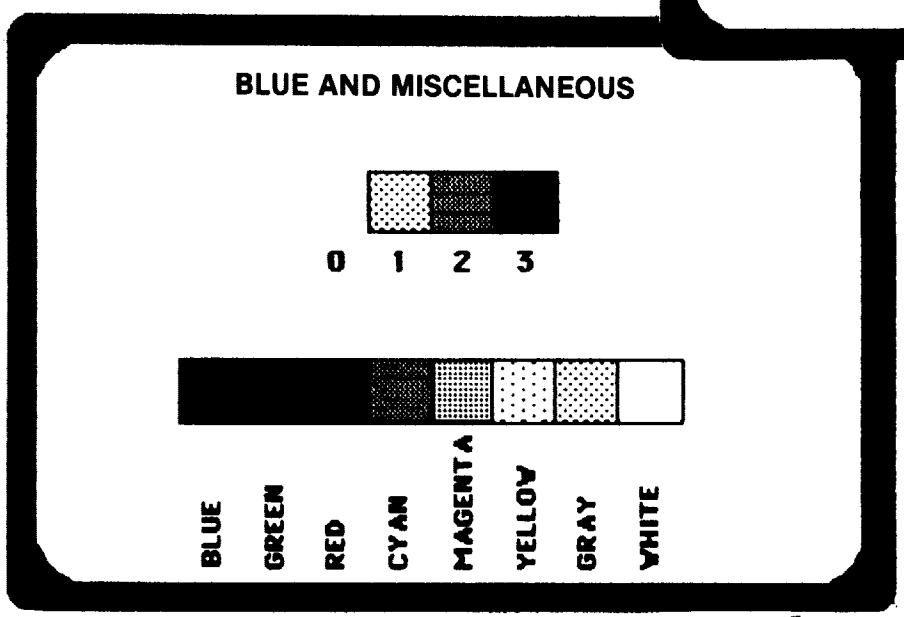

BLUE AND MISC. SCREEN
Use the blue cutoff control to make the gray color bar look gray. Adjust the red and green drive controls slightly if necessary to make the white color bar white.

VIDEO MEMORY TEST

A video memory test is an asset in any troubleshootist's game plan and "praise be" we've included one in our game. This test is invaluable in isolating those "lines on the screen" or "pieces of stuff in the picture" problems.

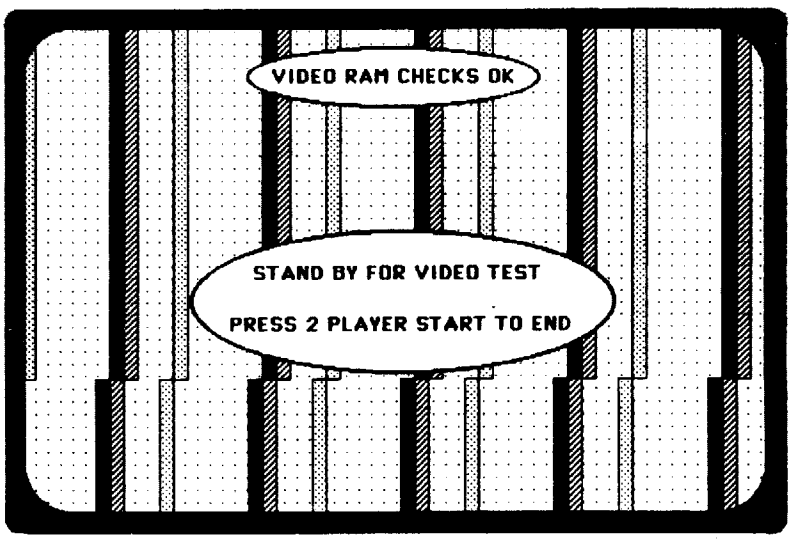

AUDIO SUBSYSTEMS TEST

The sounds are the second most important feature of any game and are essential to the "feel" of the game. The volume or level of sound is, for the most part, dictated by the owner or attendant of a location and is thus a "given", but the quality of the sound is a function of the program. This test will help in your quest to find those odd sounds or remedy the lack of certain sounds.

Some Sound Advice: Those annoying ATTRACT MODE SOUNDS are supposed to draw attention - let them!

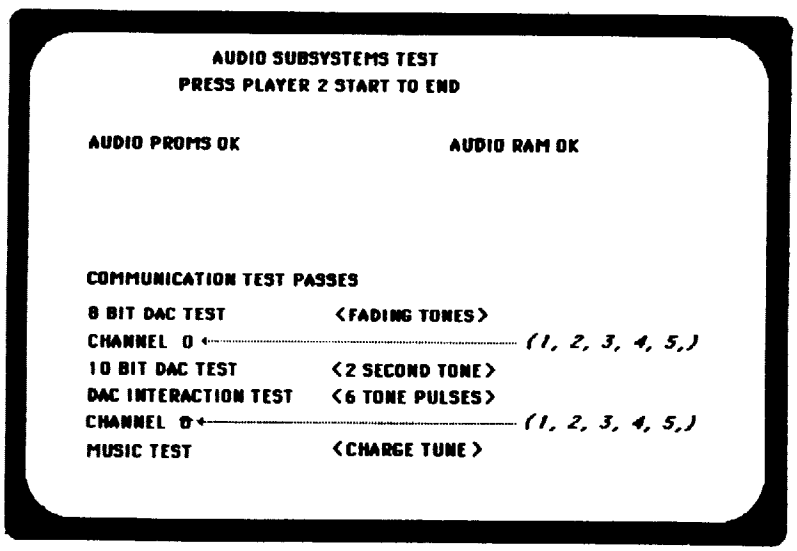

BACKGROUND SCREENS

The background screens are shown while the EPROMS, which contain the information for these screens, are displayed at the top of the screen. This test is not only helpful when looking for those "glitches" one sometimes comes across in the background of the picture, but may also be viewed as a visual test of the color and picture clarity after the Video Alignment Test has been completed.

And now, back to the Main Menu!

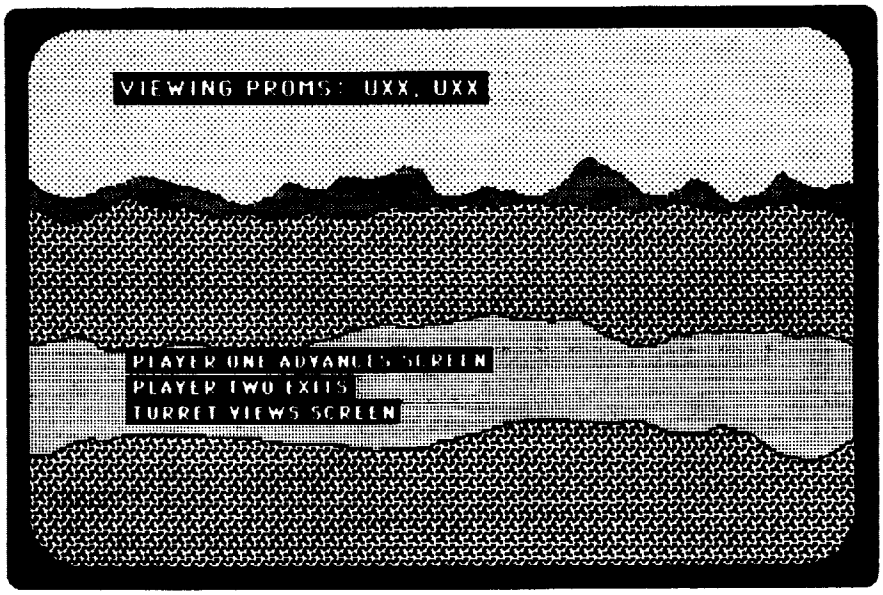

GAME SET-UP

The game set-up section is vital to the condition of your cashbox. When used in conjunction with the "Bookkeeping" and "Game Duration" areas of this diagnostics package, this function will keep your game in the thick of it for many collections. The coins-per-credit setting ranges from 1 coin - 1 credit to 20 coins - 20 credits and all denominations in between. We recommend that the attract mode and continue play features remain "ON". The difficulty levels may be set from 1 (easiest) to 8 (most difficult) and the number of lives may be from 1 to 5 per credit.

I'm sure that you will find that it pays to keep on top of the records and do a little tinkering to keep your game fine-tuned for profit.

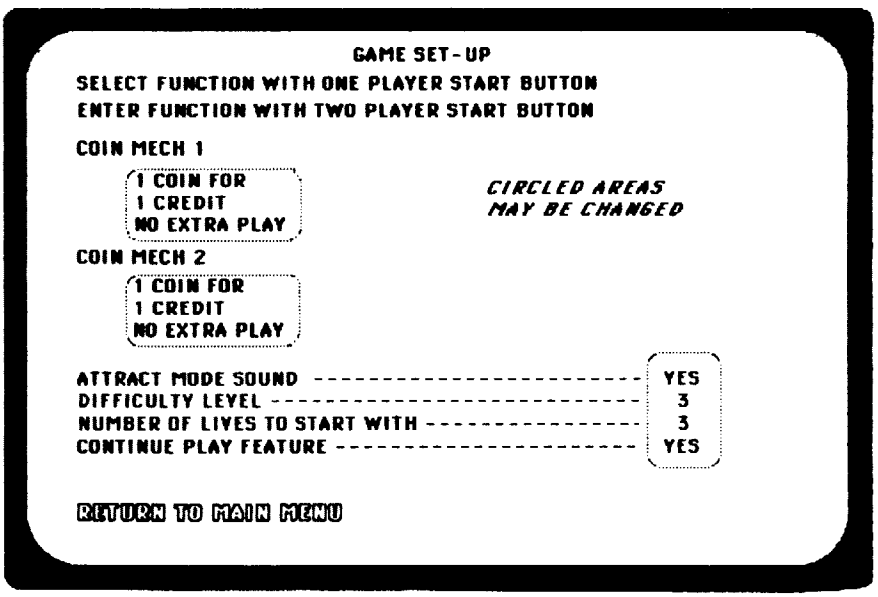

HALL OF FAME

Every once in a while it's a good idea to let someone else get to the top. This feature also helps when running tournaments.

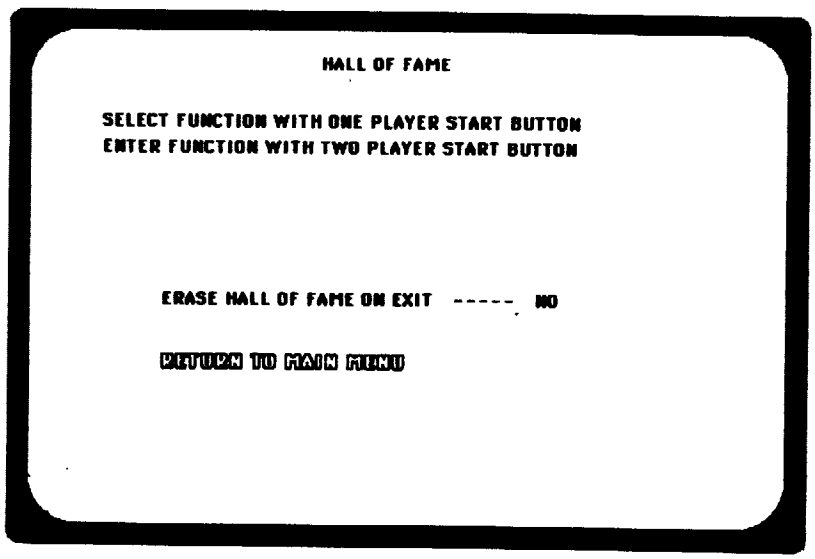

GAME DURATION STATISTICS

This section is your REPORT CARD. It lets you know how well you've done at setting your game for maximum earning power.

Since this is a "lives-per-credit" game, your game keeps track of the average length of games played for you. Use this tally along with your "Game Set-Up" function and try to keep each game between 2 and 2-½ minutes.

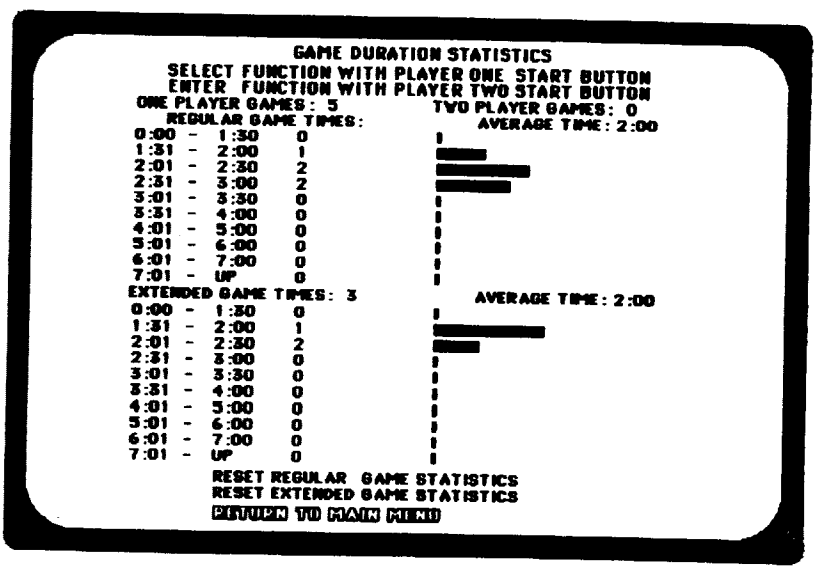

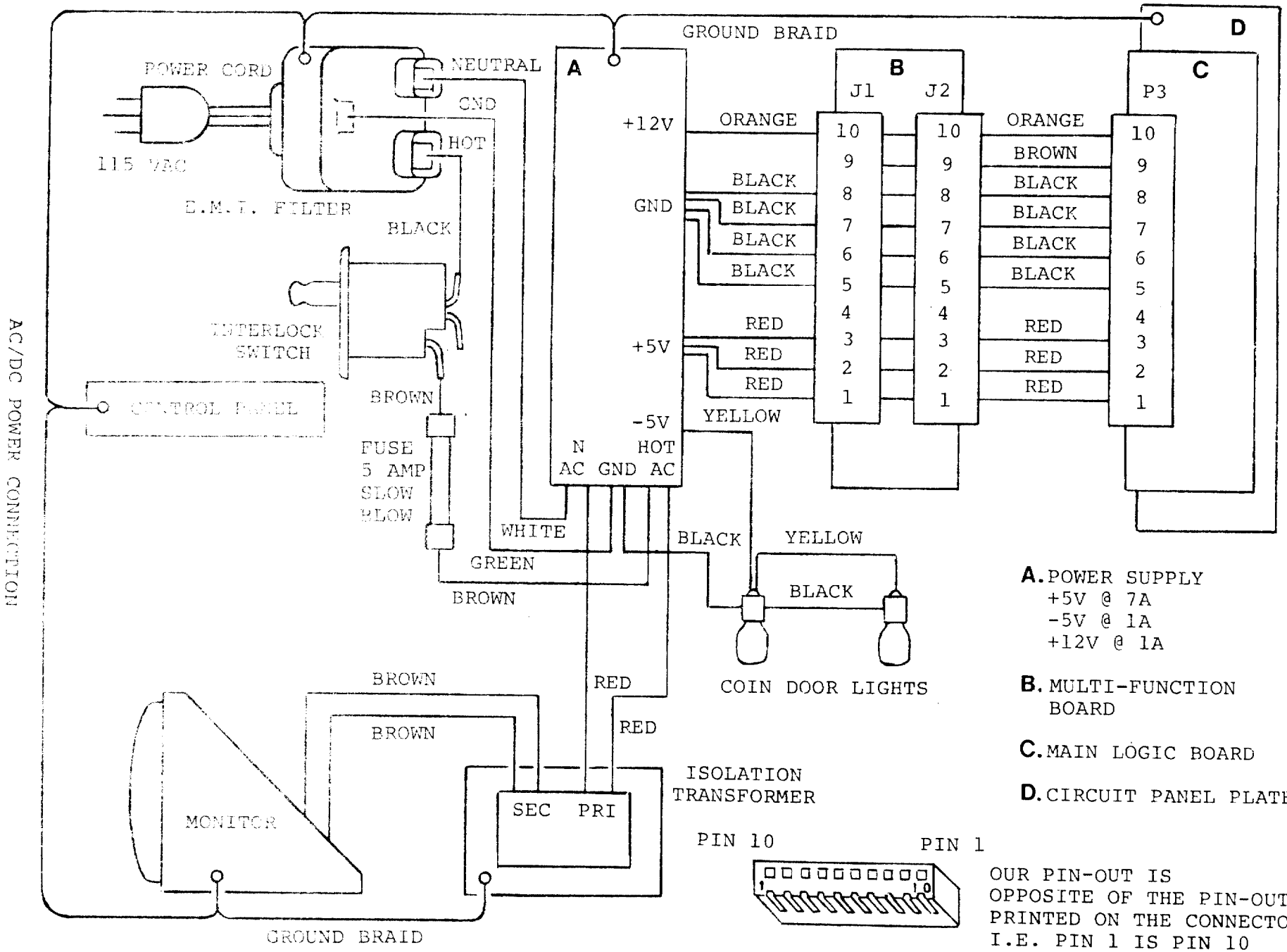

A. POWER SUPPLY
+5V @ 7A
-5V @ 1A
+12V @ 1A

B. MULTI-FUNCTION BOARD

C. MAIN LOGIC BOARD

D. CIRCUIT PANEL PLATE

OUR PIN-OUT IS OPPOSITE OF THE PIN-OUT PRINTED ON THE CONNECTOR I.E. PIN 1 IS PIN 10 FOR A 10 PIN CONNECTOR

LELAND CORP. ACTION CABINET / WITH SEAT

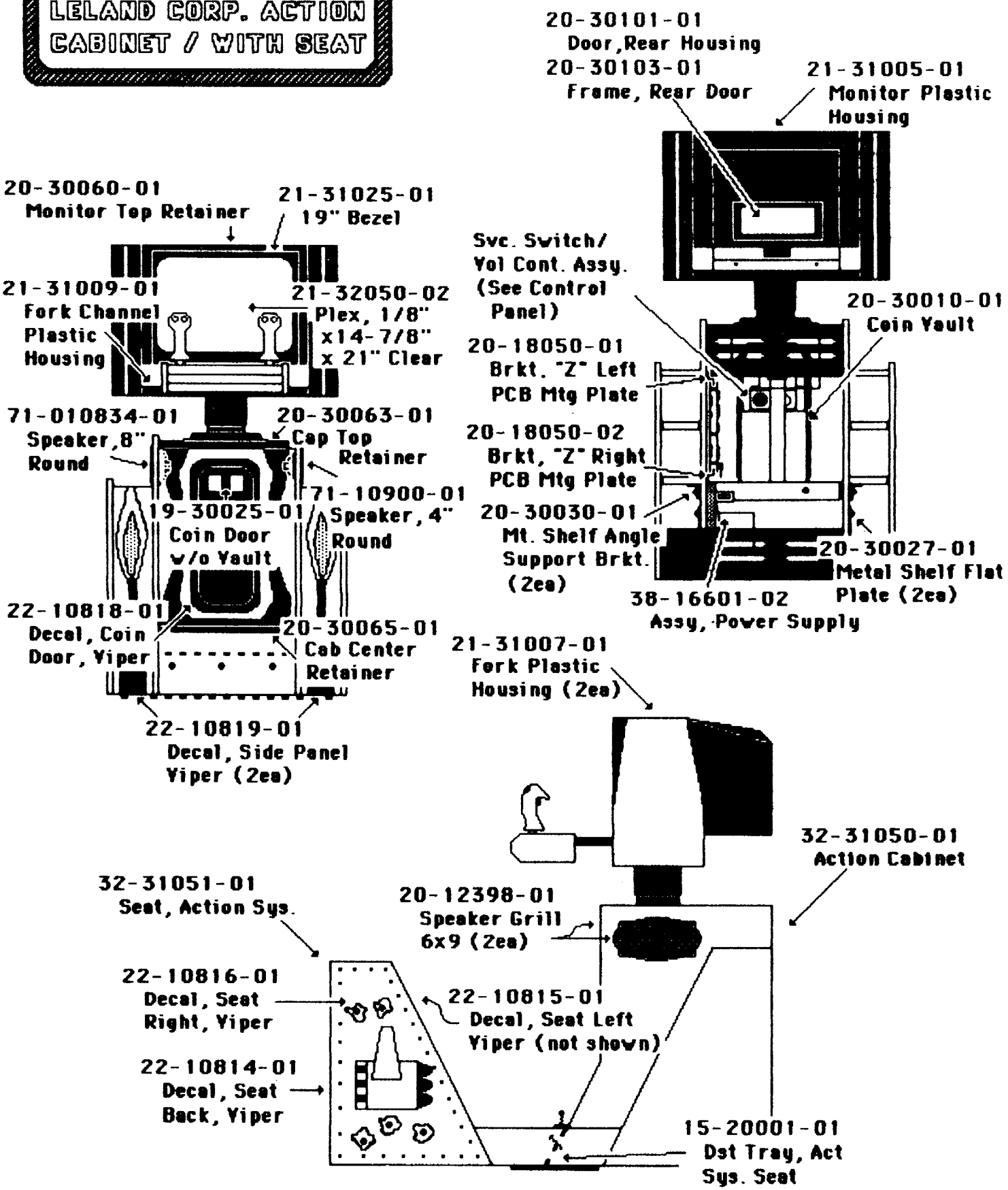

LELAND CORP. ACTION CABINET CONTROL PANEL AND POWER SUPPLY ASSEMBLIES

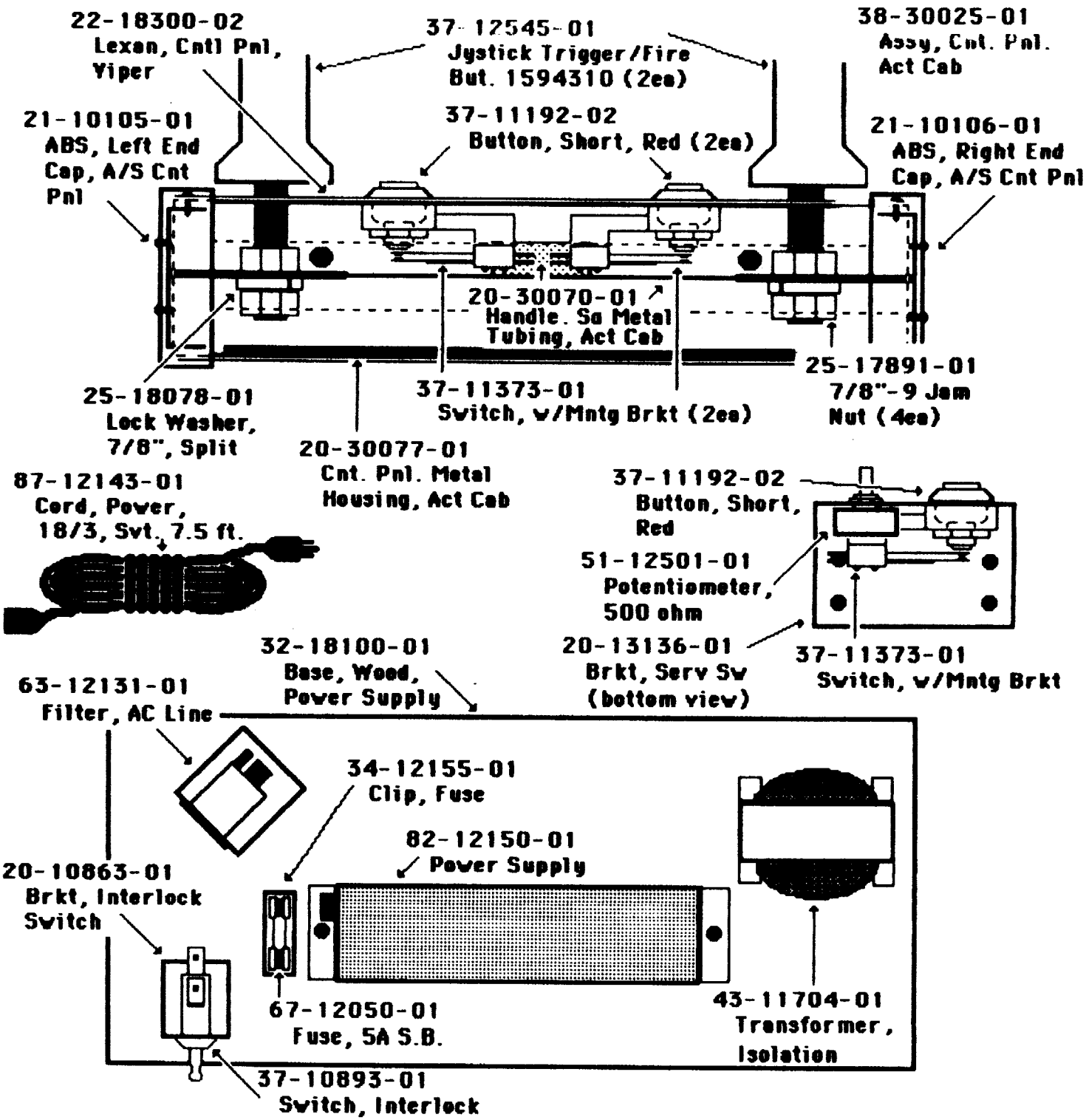

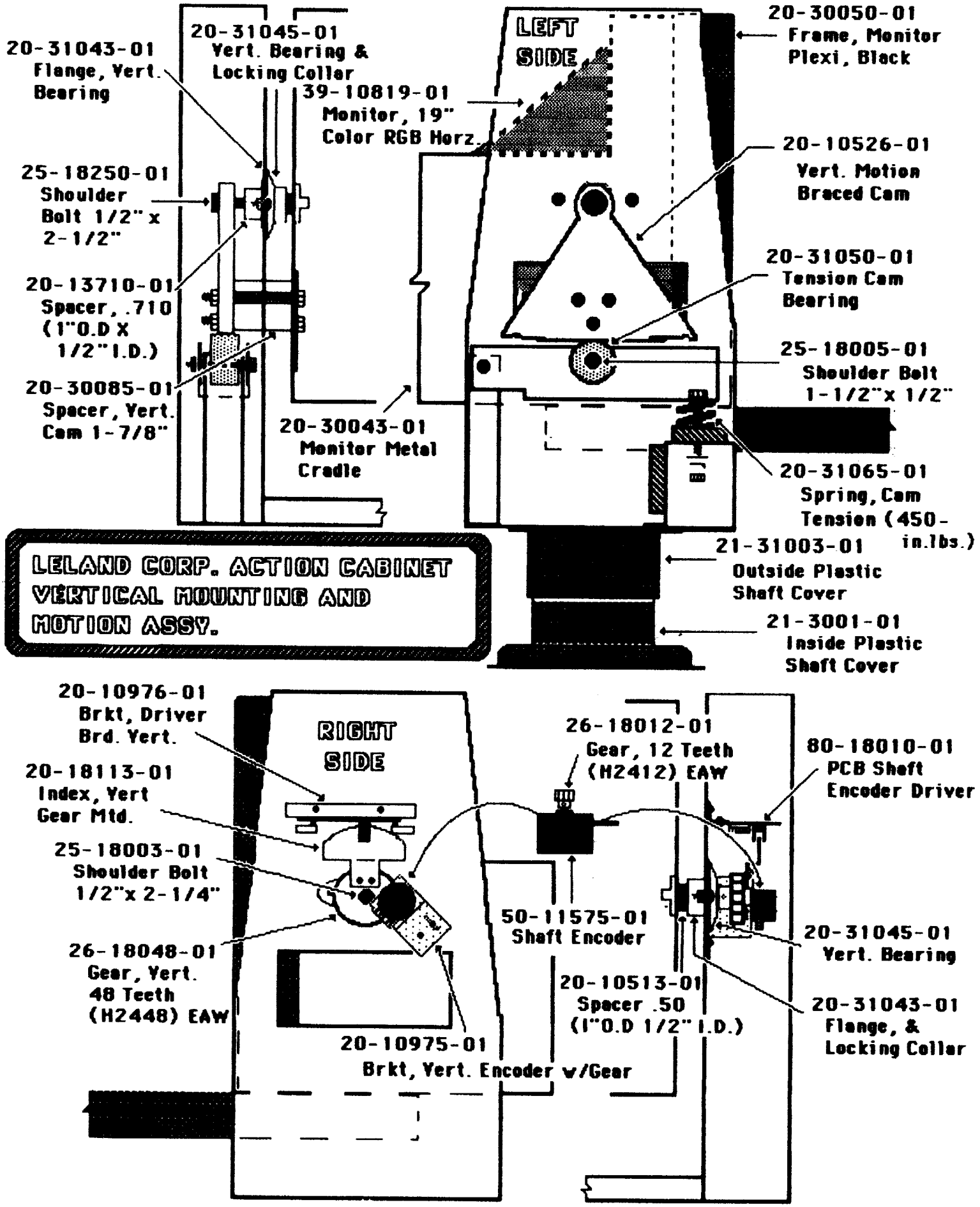
LEFT SIDE
20-31043-01 Flange, Vert. Bearing
20-31045-01 Vert. Bearing & Locking Collar
39-10819-01 Monitor, 19" Color RGB Horz.
20-30050-01 Frame, Monitor Plexi, Black
25-18250-01 Shoulder Bolt 1/2" x 2-1/2"
20-10526-01 Vert. Motion Braced Cam
20-13710-01 Spacer, .710 (1"O.D X 1/2"I.D.)
20-31050-01 Tension Cam Bearing
20-30085-01 Spacer, Vert. Cam 1-7/8"
25-18005-01 Shoulder Bolt 1-1/2"x 1/2"
20-30043-01 Monitor Metal Cradle
20-31065-01 Spring, Cam Tension (450- in.lbs.)
LELAND CORP. ACTION CABINET VERTICAL MOUNTING AND MOTION ASSY.
21-31003-01 Outside Plastic Shaft Cover
21-3001-01 Inside Plastic Shaft Cover
20-10976-01 Brkt, Driver Brd. Vert.
RIGHT SIDE
26-18012-01 Gear, 12 Teeth (H2412) EAW
80-18010-01 PCB Shaft Encoder Driver
20-18113-01 Index, Vert Gear Mtd.
25-18003-01 Shoulder Bolt 1/2"x 2-1/4"
50-11575-01 Shaft Encoder
20-31045-01 Vert. Bearing
26-18048-01 Gear, Vert. 48 Teeth (H2448) EAW
20-10513-01 Spacer .50 (1"O.D 1/2" I.D.)
20-31043-01 Flange, & Locking Collar
20-10975-01 Brkt, Vert. Encoder w/Gear

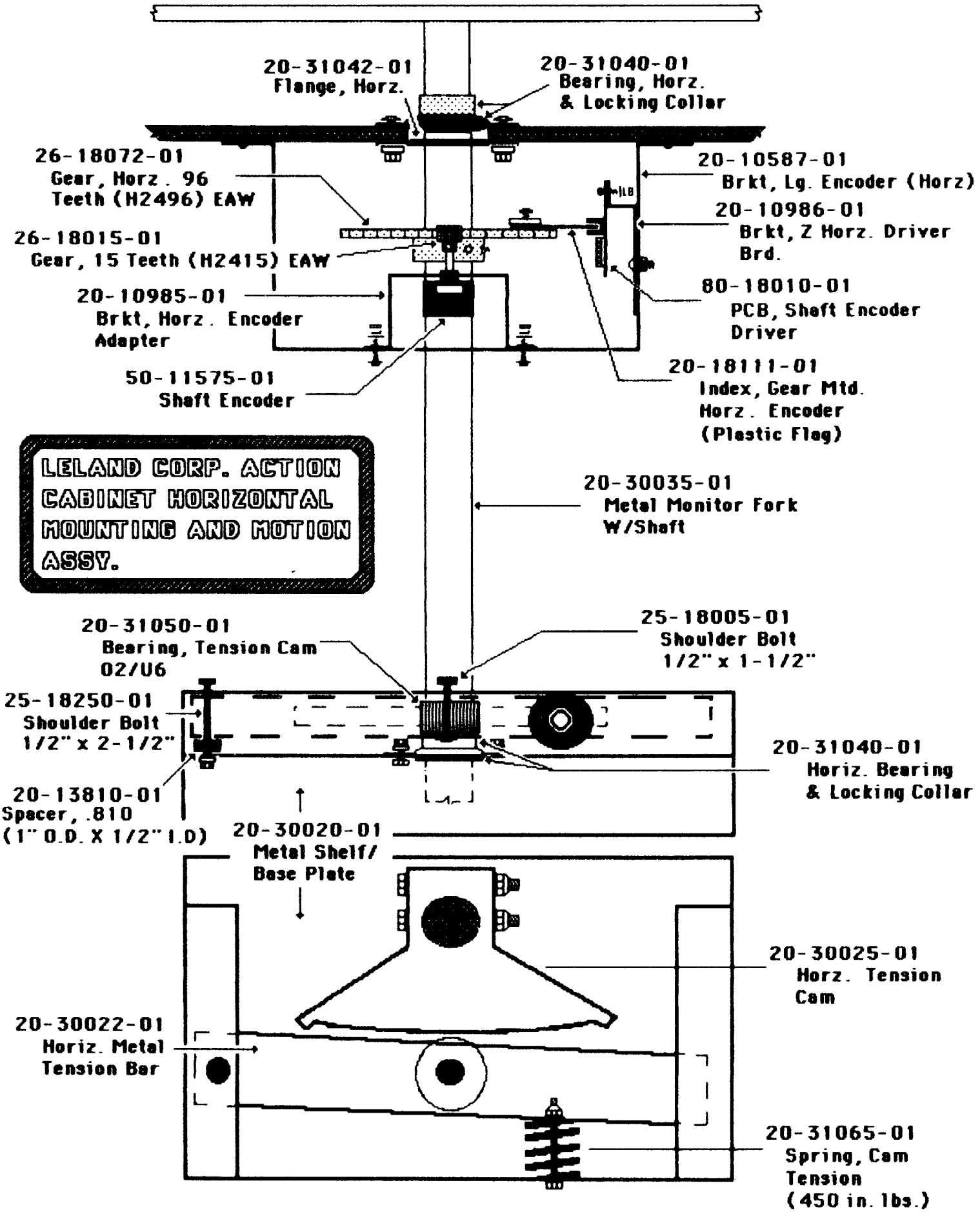
20-31042-01
Flange, Horz.
20-31040-01
Bearing, Horz.
& Locking Collar
26-18072-01
Gear, Horz. 96
Teeth (H2496) EAW
20-10587-01
Brkt, Lg. Encoder (Horz)
20-10986-01
Brkt, Z Horz. Driver
Brd.
26-18015-01
Gear, 15 Teeth (H2415) EAW
20-10985-01
Brkt, Horz. Encoder
Adapter
80-18010-01
PCB, Shaft Encoder
Driver
50-11575-01
Shaft Encoder
20-18111-01
Index, Gear Mtd.
Horz. Encoder
(Plastic Flag)
LELAND CORP. ACTION
CABINET HORIZONTAL
MOUNTING AND MOTION
ASSY.
20-30035-01
Metal Monitor Fork
W/Shaft
20-31050-01
Bearing, Tension Cam
02/U6
25-18005-01
Shoulder Bolt
1/2" x 1-1/2"
25-18250-01
Shoulder Bolt
1/2" x 2-1/2"
20-31040-01
Horiz. Bearing
& Locking Collar
20-13810-01
Spacer, .810
(1" O.D. X 1/2" I.D)
20-30020-01
Metal Shelf/
Base Plate
20-30025-01
Horz. Tension
Cam
20-30022-01
Horiz. Metal
Tension Bar
20-31065-01
Spring, Cam
Tension
(450 in. lbs.)

SWITCHING POWER SUPPLY

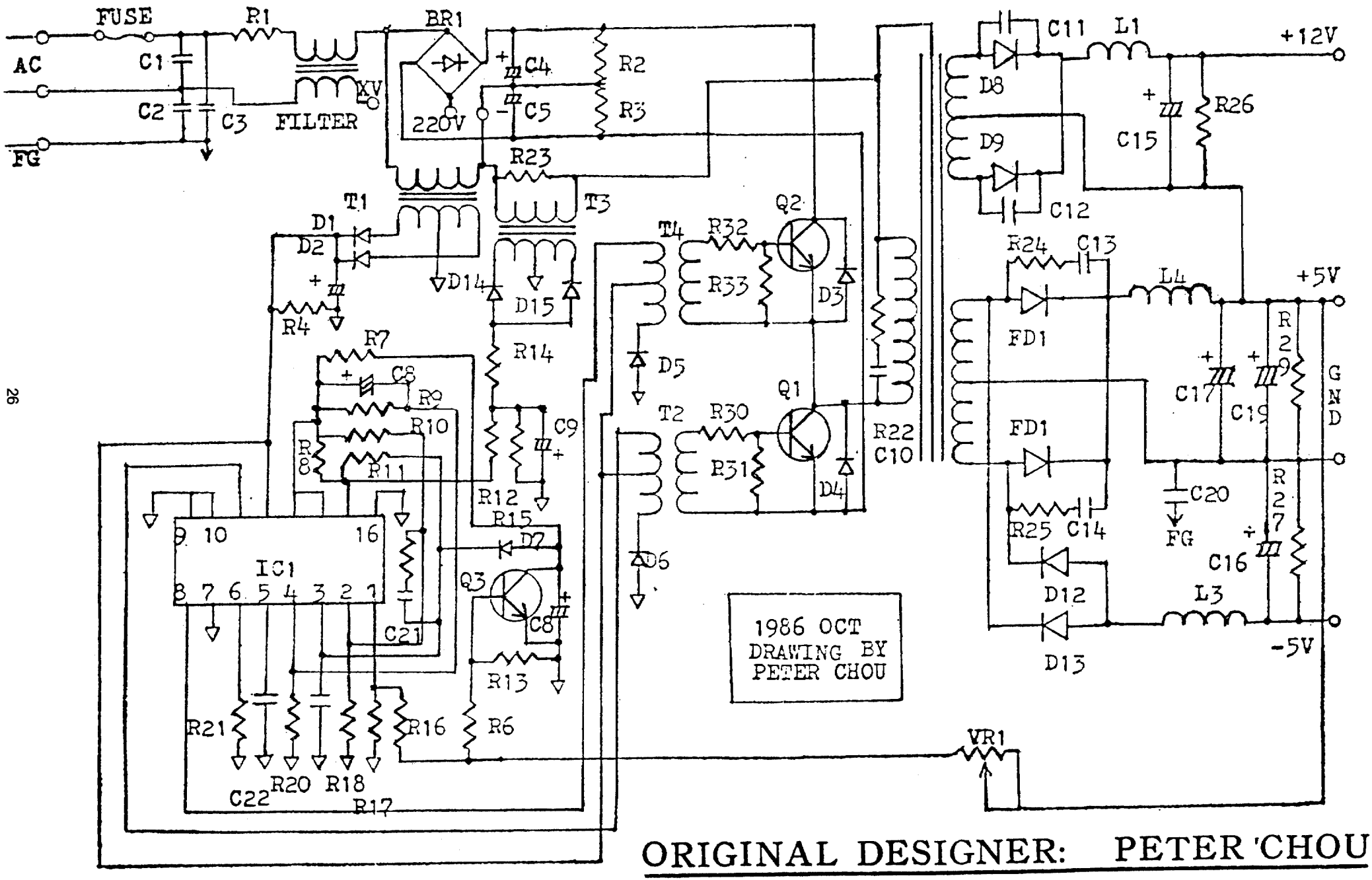

ORIGINAL DESIGNER: PETER CHOU

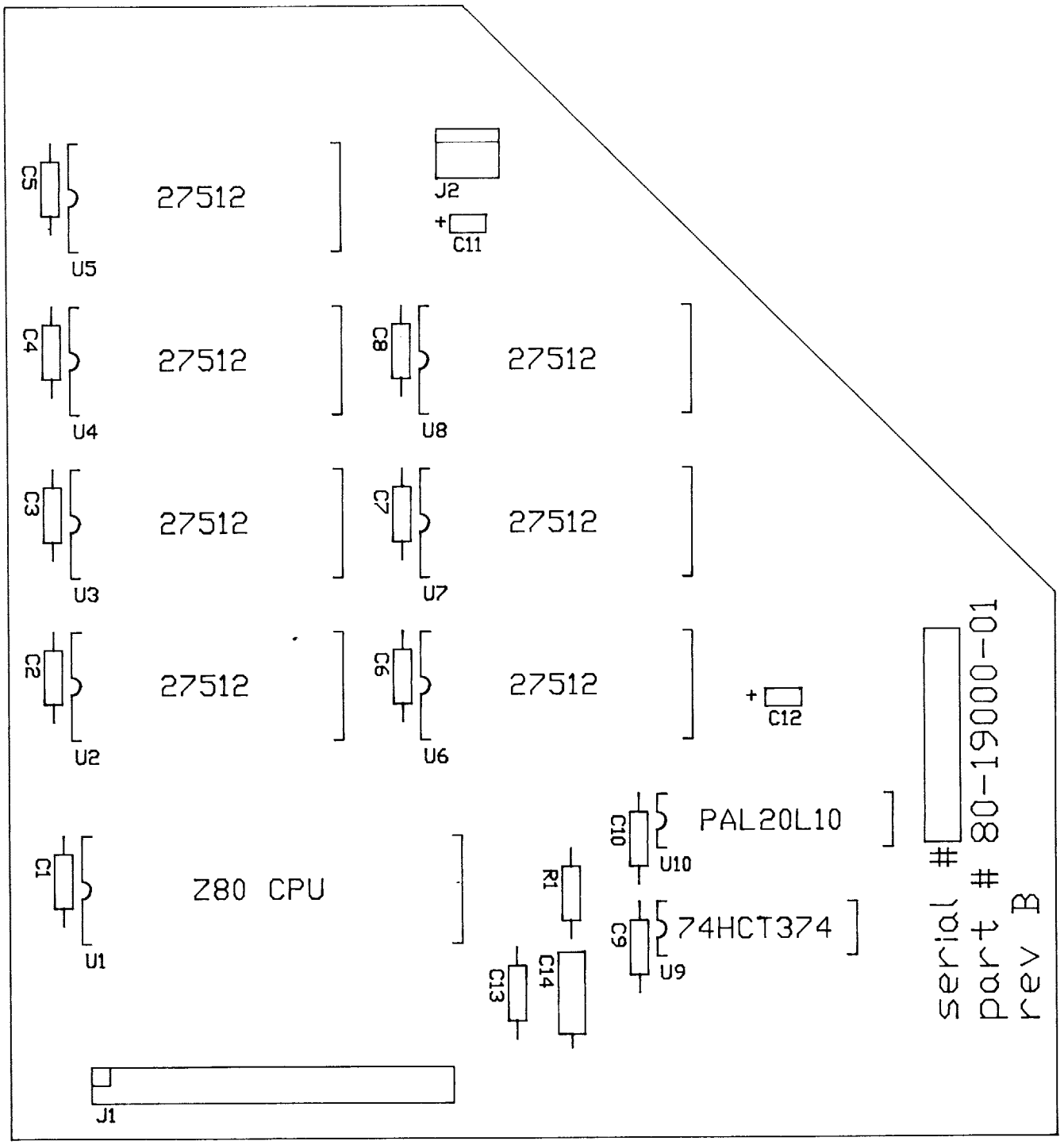

ROM EXPANSION BOARD

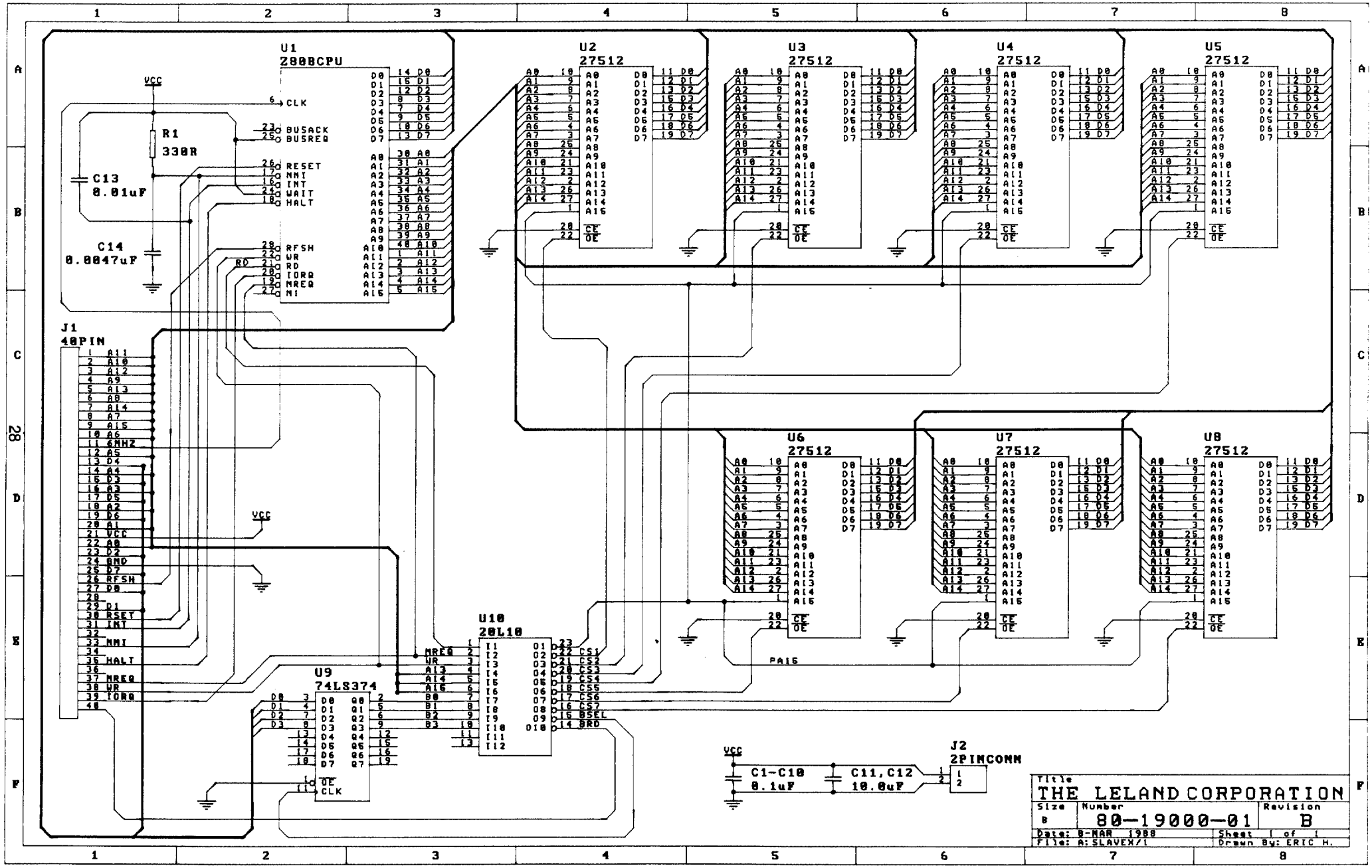
U1
Z80BCPU
U2
27512
U3
27512
U4
27512
U5
27512
U6
27512
U7
27512
U8
27512
U9
74LS374
U10
20L10
J1
40PIN
J2
2PINCONN
R1
330R
C13
0.01uF
C14
0.0047uF
C1-C10
0.1uF
C11,C12
10.0uF
VCC
CLK
BUSACK
BUSREQ
RESET
NMI
INT
WAIT
HALT
RFSH
WR
RD
IORQ
MREQ
M1
6MHZ
PA15
CS1
CS2
CS3
CS4
CS5
CS6
CS7
BSEL
BRD
THE LELAND CORPORATION
Size
B
Number
80-19000-01
Revision
B
Date: 8-MAR 1988
Sheet 1 of 1
File: A:SLAVEX/1
Drawn By: ERIC H.

REVISIONS				
ZONE	LTR	DESCRIPTION	DATE	APPROVED

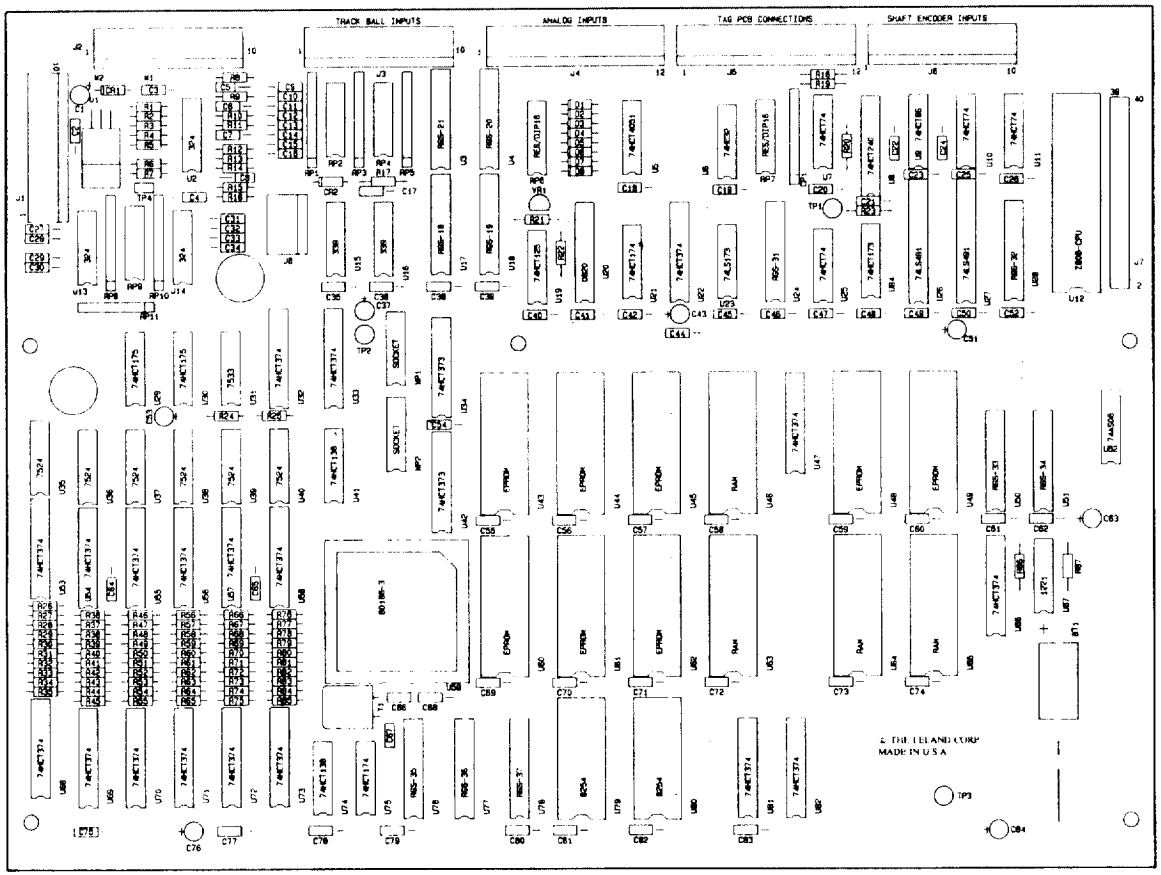

QTY REQD	CODE IDENT	PART OR IDENTIFYING NO	NOMENCLATURE OR DESCRIPTION
PARTS LIST			

UNLESS OTHERWISE SPECIFIED DIMENSIONS ARE IN INCHES
TOLERANCES ARE
FRACTIONS ± DECIMALS XX ± .XXX ± ANGLES ±

MATERIAL

FINISH

NEXT ASSY | USED ON

APPLICATION

DO NOT SCALE DRAWING

CONTRACT NO

APPROVALS	DATE
DRAWN Tech CAD	10-8-87
CHECKED	

THE LELAND CORP.

MULTI FUNCTION BOARD

SIZE	CODE IDENT NO	DRAWING NO	REV
D		81-18000-01	B

SCALE: FULL | SHEET 1 OF 1

K7000 COLOR MONITOR SCHEMATIC DIAGRAM

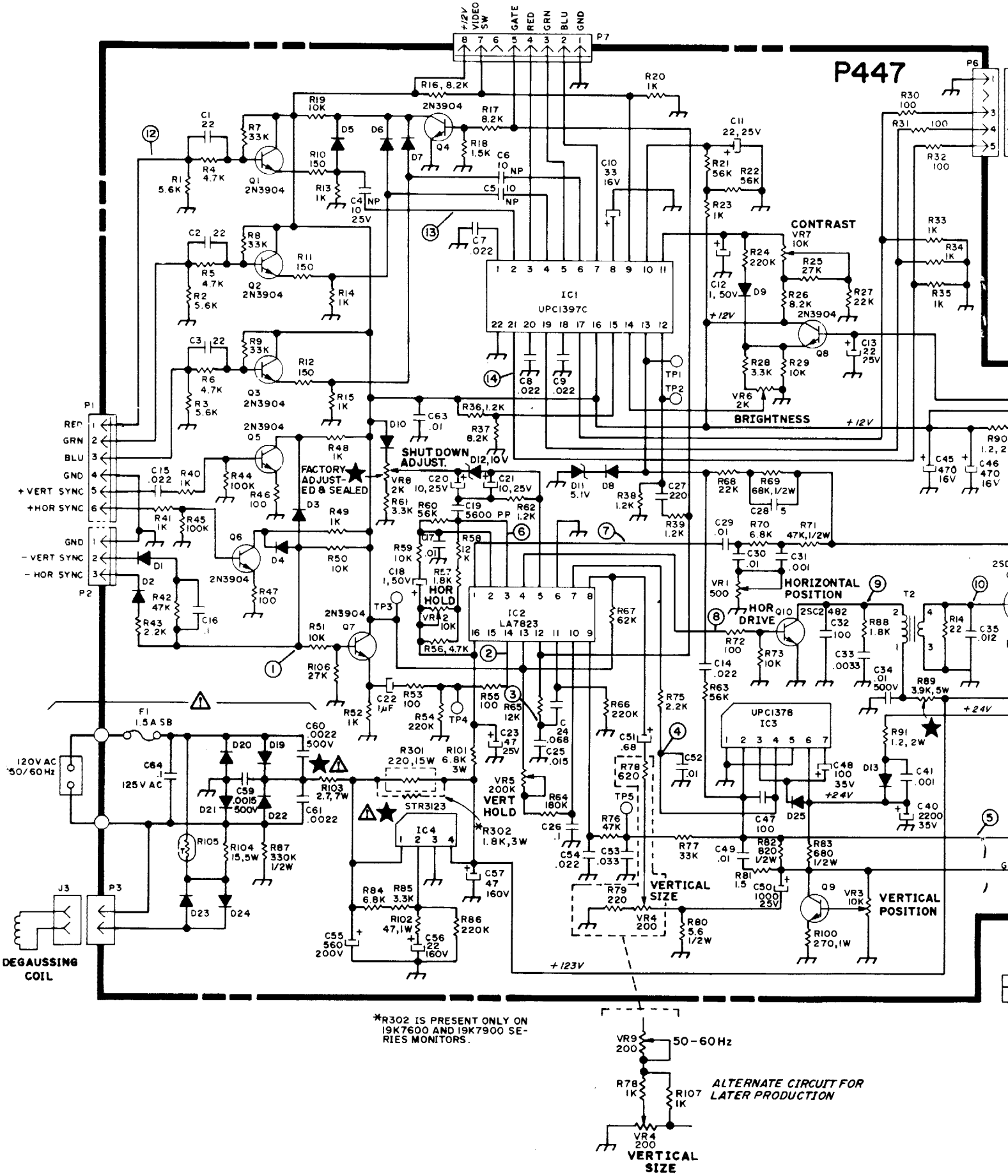

*R302 IS PRESENT ONLY ON 19K7600 AND 19K7900 SERIES MONITORS.

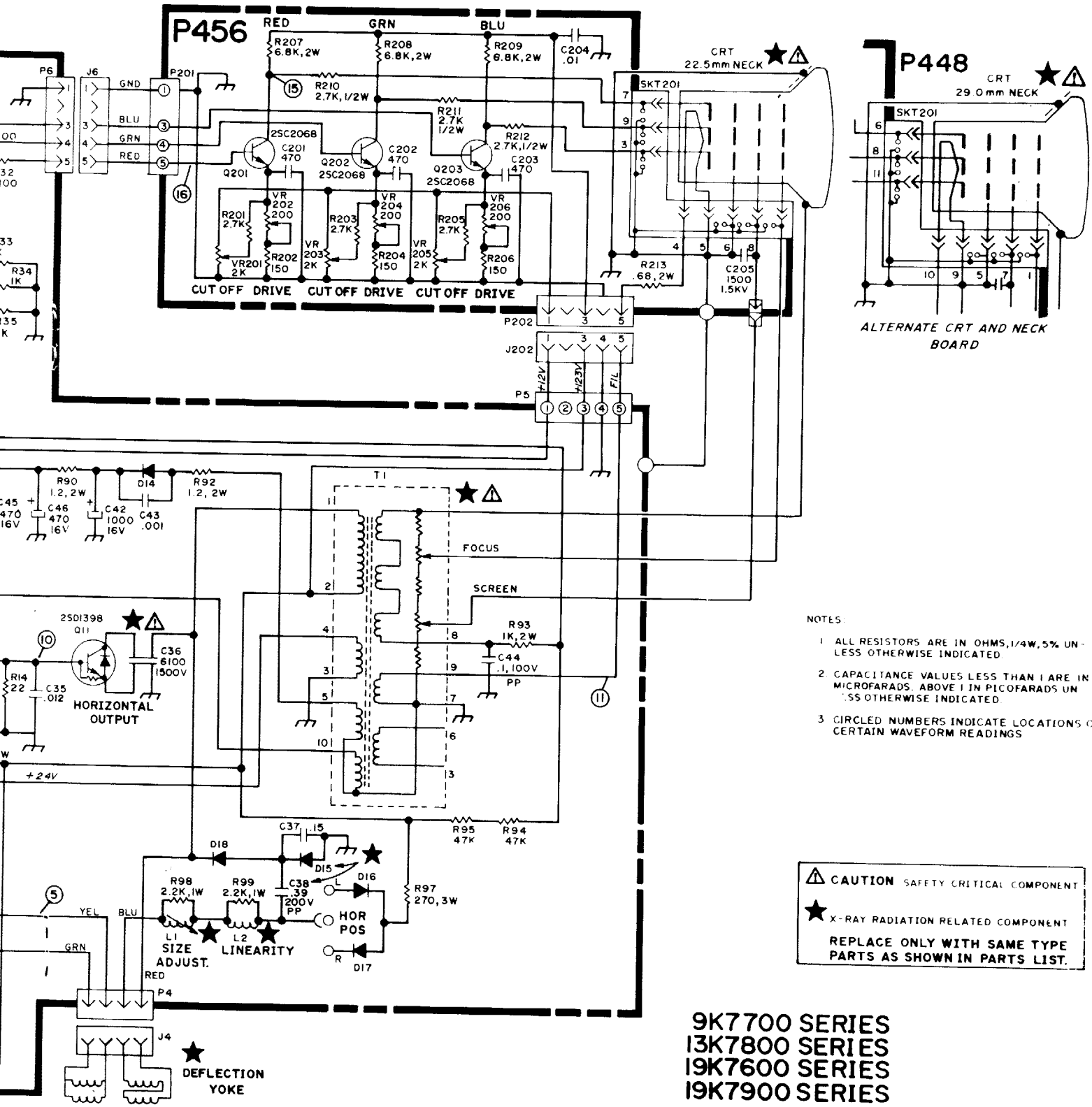

NOTES:

1. ALL RESISTORS ARE IN OHMS, 1/4W, 5% UNLESS OTHERWISE INDICATED.
2. CAPACITANCE VALUES LESS THAN 1 ARE IN MICROFARADS. ABOVE 1 IN PICOFARADS UNLESS OTHERWISE INDICATED.
3. CIRCLED NUMBERS INDICATE LOCATIONS OF CERTAIN WAVEFORM READINGS.

⚠ CAUTION SAFETY CRITICAL COMPONENT

★ X-RAY RADIATION RELATED COMPONENT

REPLACE ONLY WITH SAME TYPE PARTS AS SHOWN IN PARTS LIST.

9K7700 SERIES
13K7800 SERIES
19K7600 SERIES
19K7900 SERIES

NOTE:
REFER TO OTHER SCHEMATIC DIAGRAMS FOR CERTAIN UNIQUE MODELS.

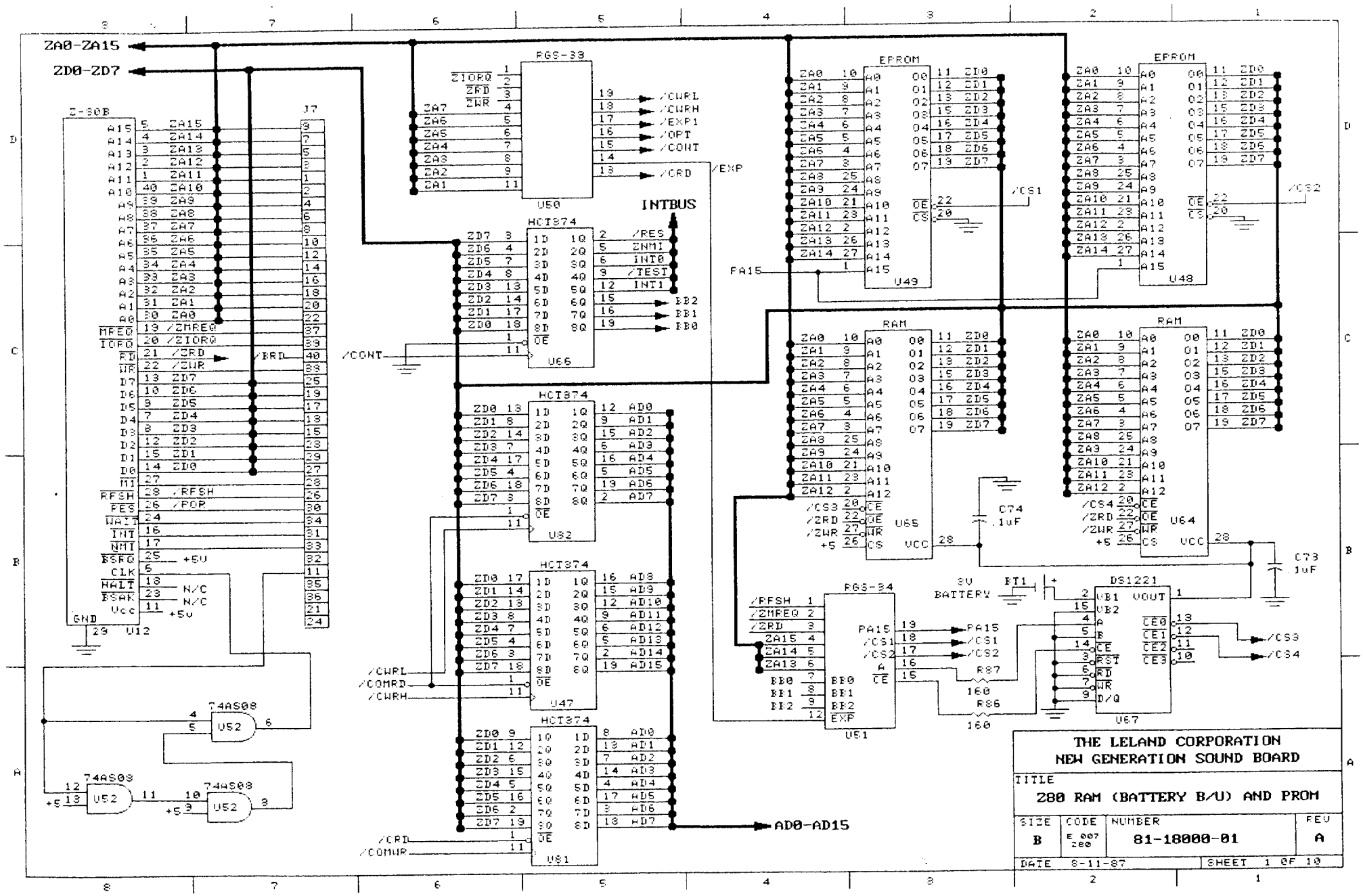
ZA0-ZA15
ZD0-ZD7
Z-80B
U12
J7
RGS-33
U50
HCT374
U66
HCT374
U82
HCT374
U47
HCT374
U81
EPROM
U49
EPROM
U48
RAM
U65
RAM
U64
RGS-34
U51
DS1221
U67
74AS08
U52
INTBUS
AD0-AD15
3V BATTERY
BT1
C74 .1uF
C73 .1uF
THE LELAND CORPORATION
NEW GENERATION SOUND BOARD
TITLE
Z80 RAM (BATTERY B/U) AND PROM
SIZE B
CODE E 007 Z80
NUMBER 81-18000-01
REV A
DATE 8-11-87
SHEET 1 OF 10

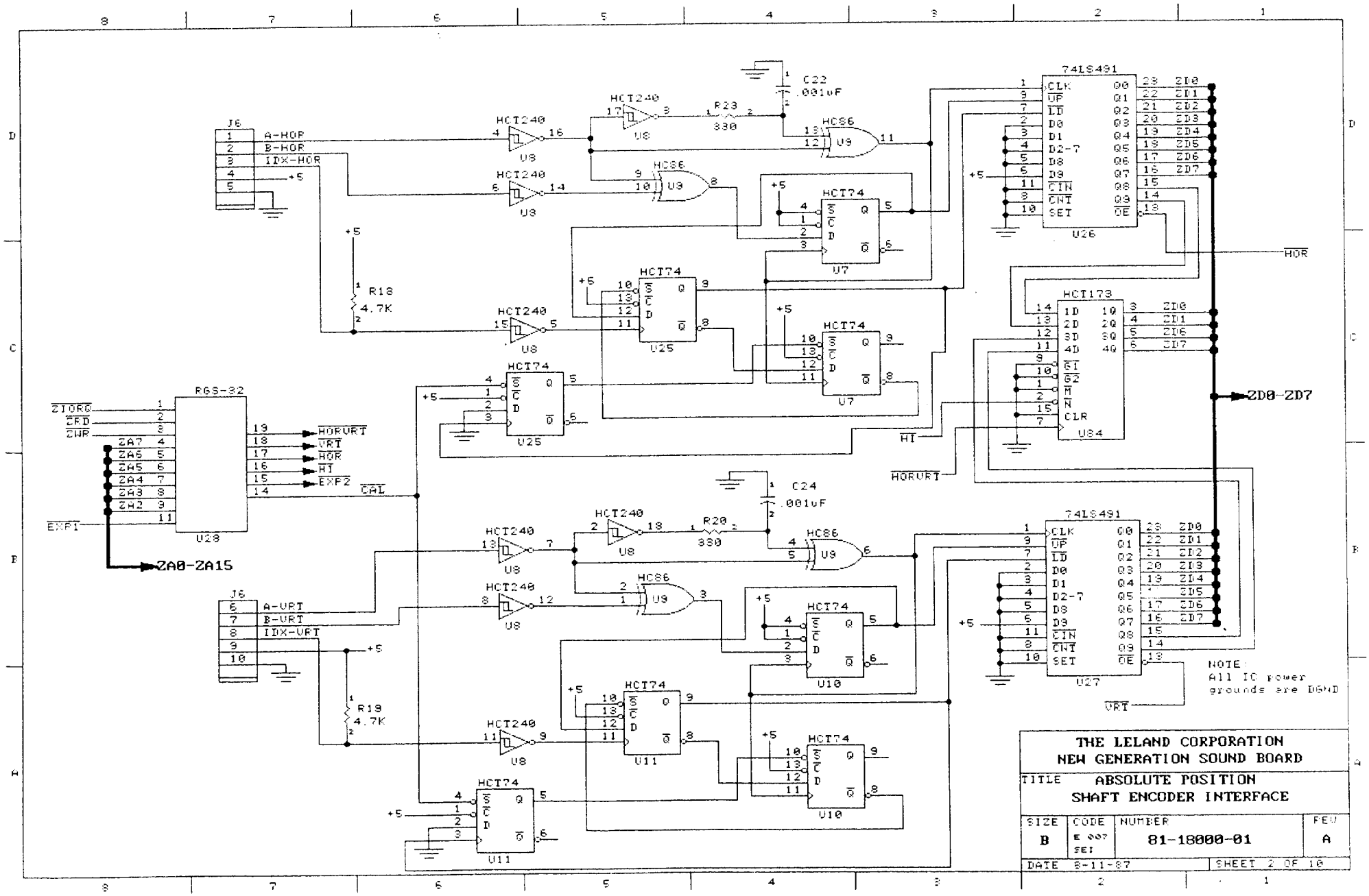
THE LELAND CORPORATION
NEW GENERATION SOUND BOARD
TITLE ABSOLUTE POSITION
SHAFT ENCODER INTERFACE
SIZE B
CODE E 007 SEI
NUMBER 81-18000-01
REV A
DATE 8-11-87
SHEET 2 OF 10
NOTE:
All IC power grounds are DGND
74LS491
HCT173
HCT240
HCT74
HC86
RGS-32
ZD0-ZD7
ZA0-ZA15
HORVRT
VRT
HOR
HI
EXP2
CAL
EXP1
ZIORQ
ZRD
ZWR
A-HOR
B-HOR
IDX-HOR
A-VRT
B-VRT
IDX-VRT
R18 4.7K
R19 4.7K
R20 330
R23 330
C22 .001uF
C24 .001uF
U26
U27
U28
U25
U7
U8
U9
U10
U11
U84
J6

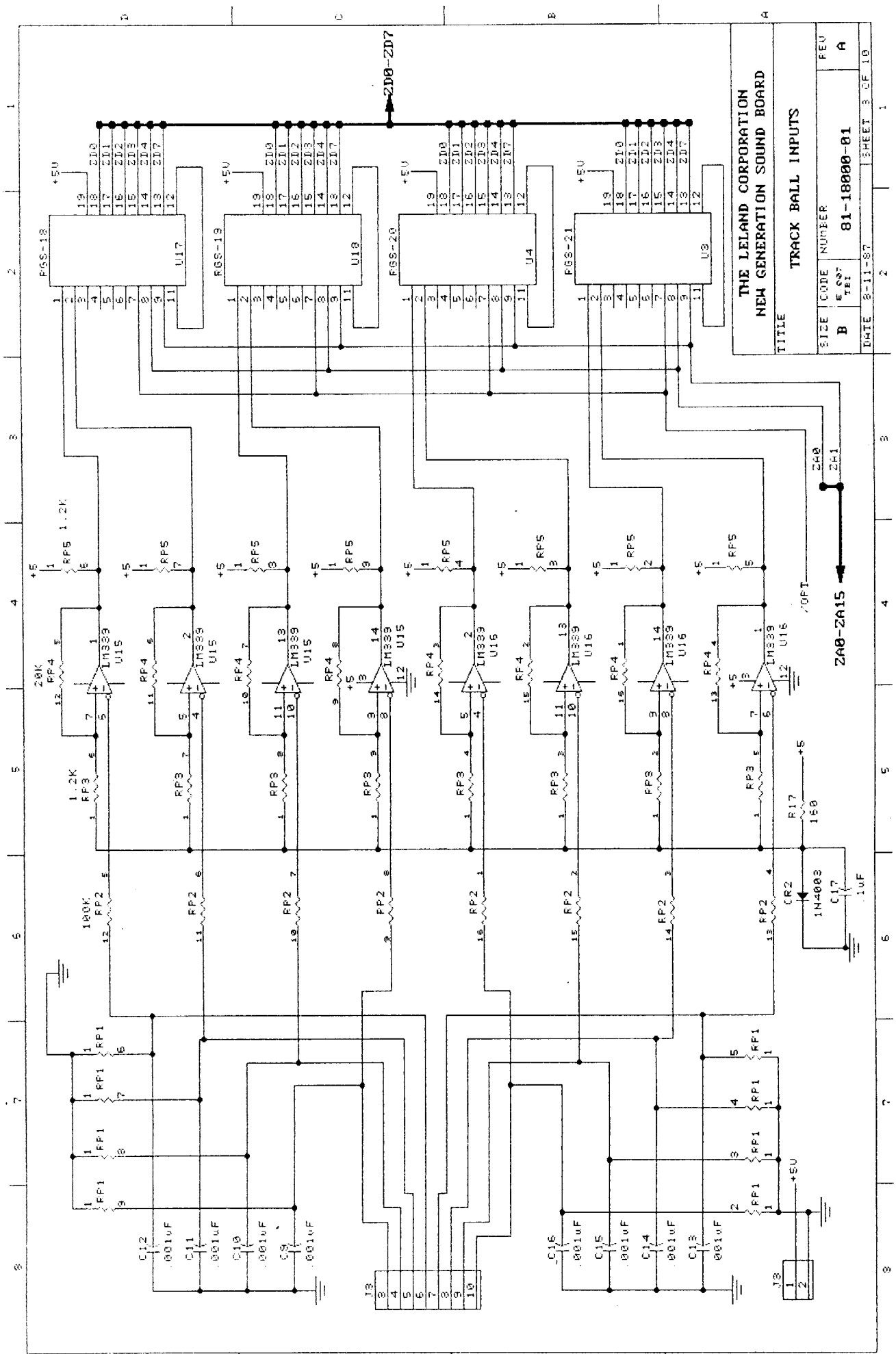
THE LELAND CORPORATION
NEW GENERATION SOUND BOARD
TITLE
TRACK BALL INPUTS
SIZE
B
CODE
NUMBER
81-18000-01
REV
A
DATE
8-11-87
SHEET 3 OF 10
ZD0-ZD7
ZA0-ZA15
ZH0
ZH1
/OPT
U17
U18
U4
U3
U15
U16
LM339
RP1
RP2
RP3
RP4
RP5
C9
C10
C11
C12
C13
C14
C15
C16
C17
CR2
IN4003
R17
J3
J8

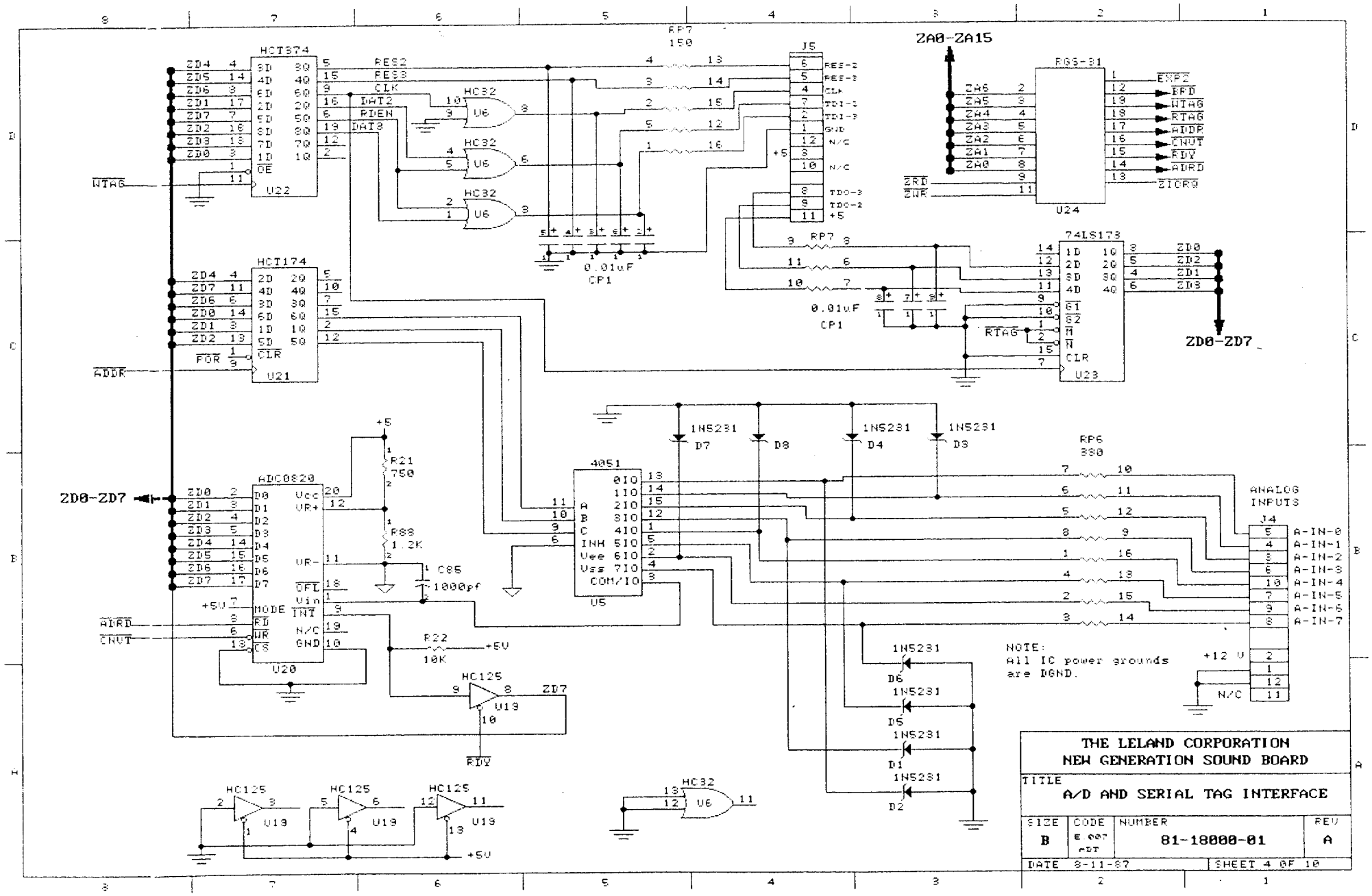
THE LELAND CORPORATION
NEW GENERATION SOUND BOARD
TITLE
A/D AND SERIAL TAG INTERFACE
SIZE
B
CODE
E 007
NUMBER
81-18000-01
REV
A
DATE 8-11-87
SHEET 4 OF 10
NOTE:
All IC power grounds are DGND.
ZA0-ZA15
ZD0-ZD7
ANALOG INPUTS
J4
J5
HCT374
HCT174
ADC0820
4051
74LS173
RGS-31
U22
U21
U20
U5
U23
U24
U6
U19
HC32
HC125
1N5231
RP7 150
RP6 330
R21 750
R88 1.2K
C85 1000pf
R22 10K
0.01uF CP1
+5V
+12 V
N/C
WTAG
ADDR
ADRD
CNVT
RDY
RTAG
ZRD
ZWR
EXP2
BRD
WTAG
RTAG
ADDR
CNVT
RDY
ADRD
ZIORQ
A-IN-0
A-IN-1
A-IN-2
A-IN-3
A-IN-4
A-IN-5
A-IN-6
A-IN-7

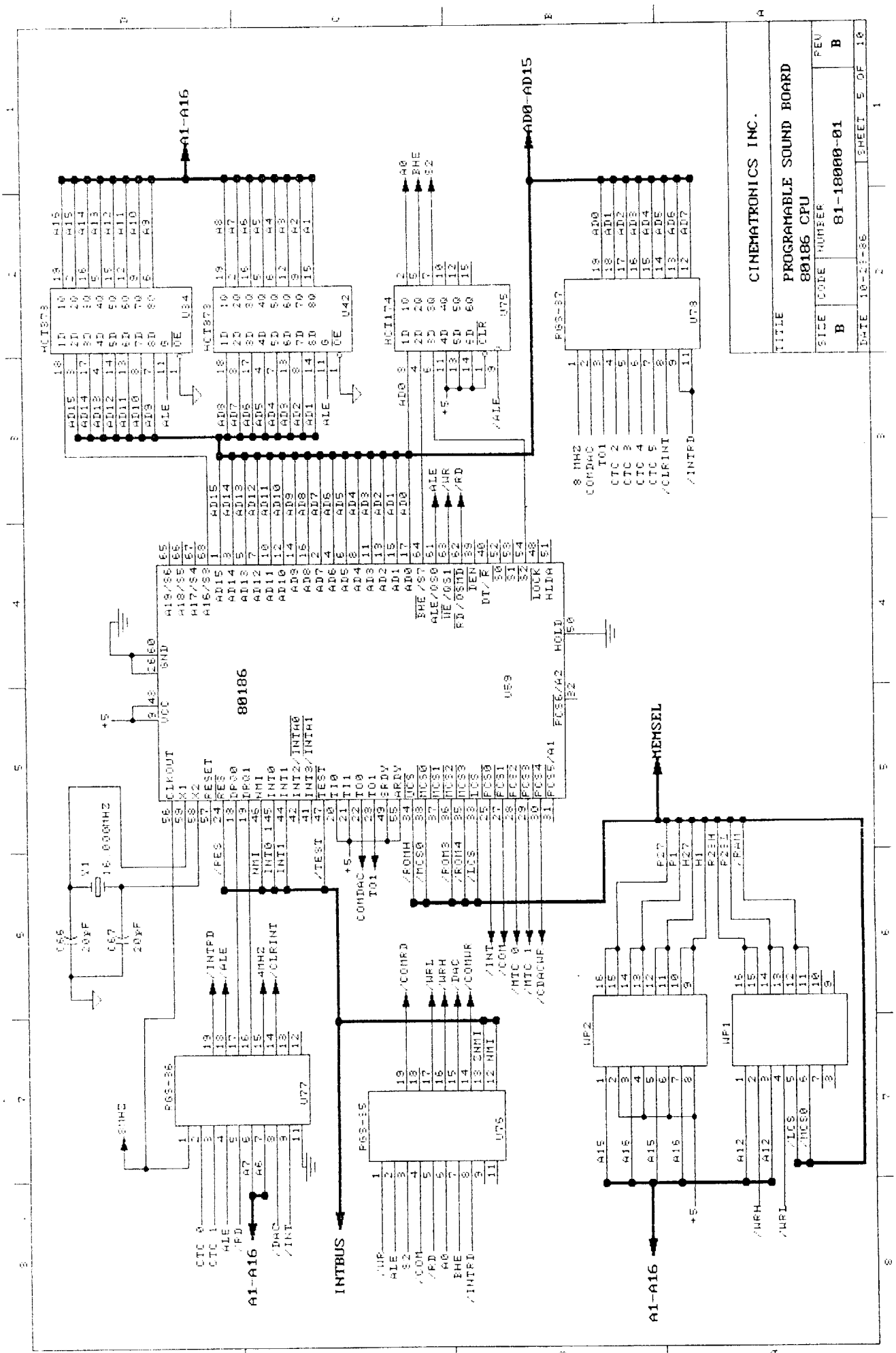
CINEMATRONICS INC.
TITLE
PROGRAMABLE SOUND BOARD
80186 CPU
SIZE
B
CODE
NUMBER
81-18000-01
REV
B
DATE
10-23-86
SHEET 5 OF 10
80186
A1-A16
AD0-AD15
INTBUS
MEMSEL
16.000MHZ

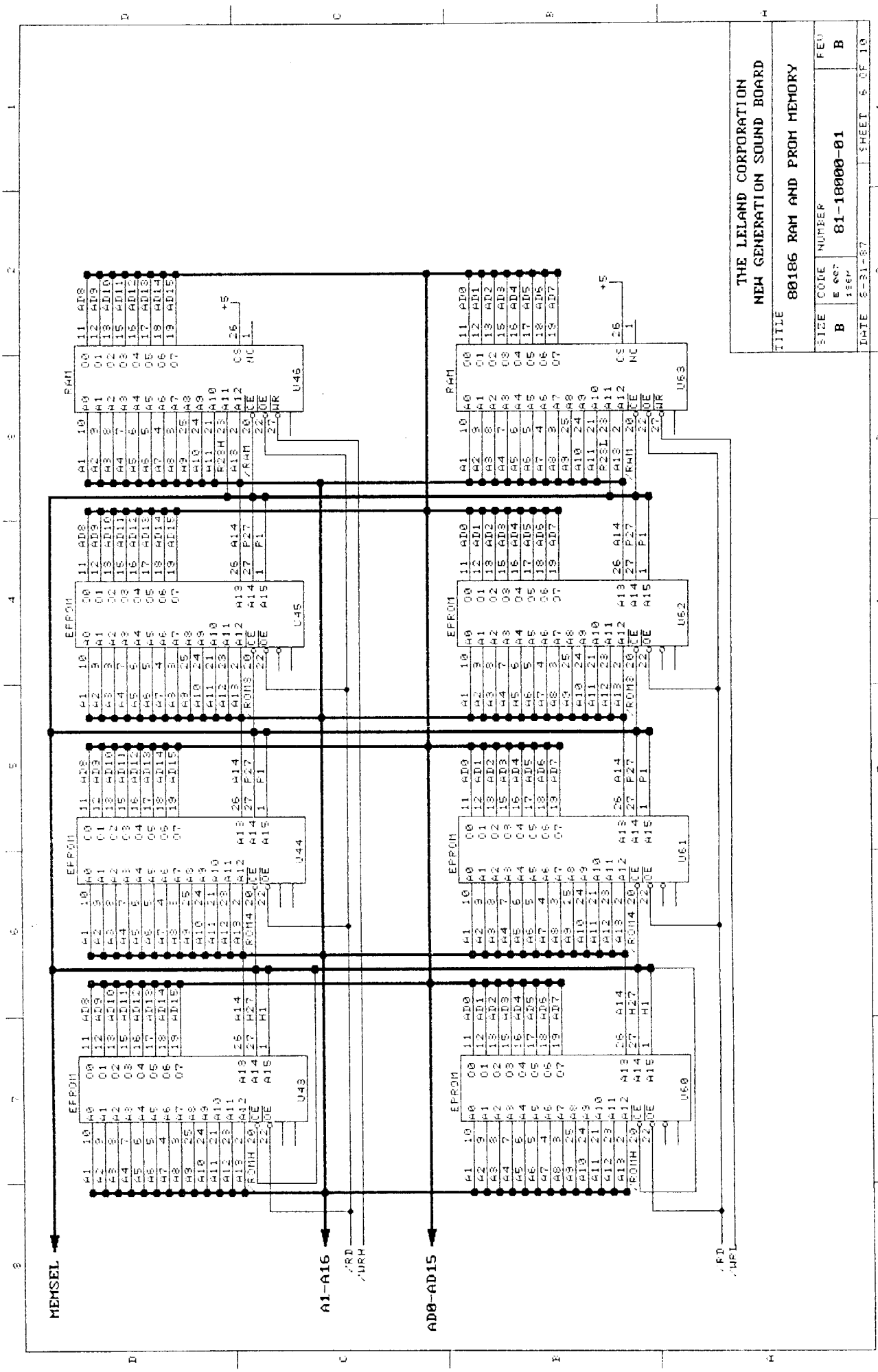
THE LELAND CORPORATION
NEW GENERATION SOUND BOARD
TITLE
80186 RAM AND PROM MEMORY
SIZE
B
CODE
NUMBER
81-18000-01
REV
B
DATE 8-31-87
SHEET 6 OF 10
MEMSEL
A1-A16
/RD
/UWR
AD0-AD15
/RD
/UWR
RAM
EPROM
U45
U46
U62
U63
U44
U48
U61
U60
+5
/RAM
/ROMH
/ROML

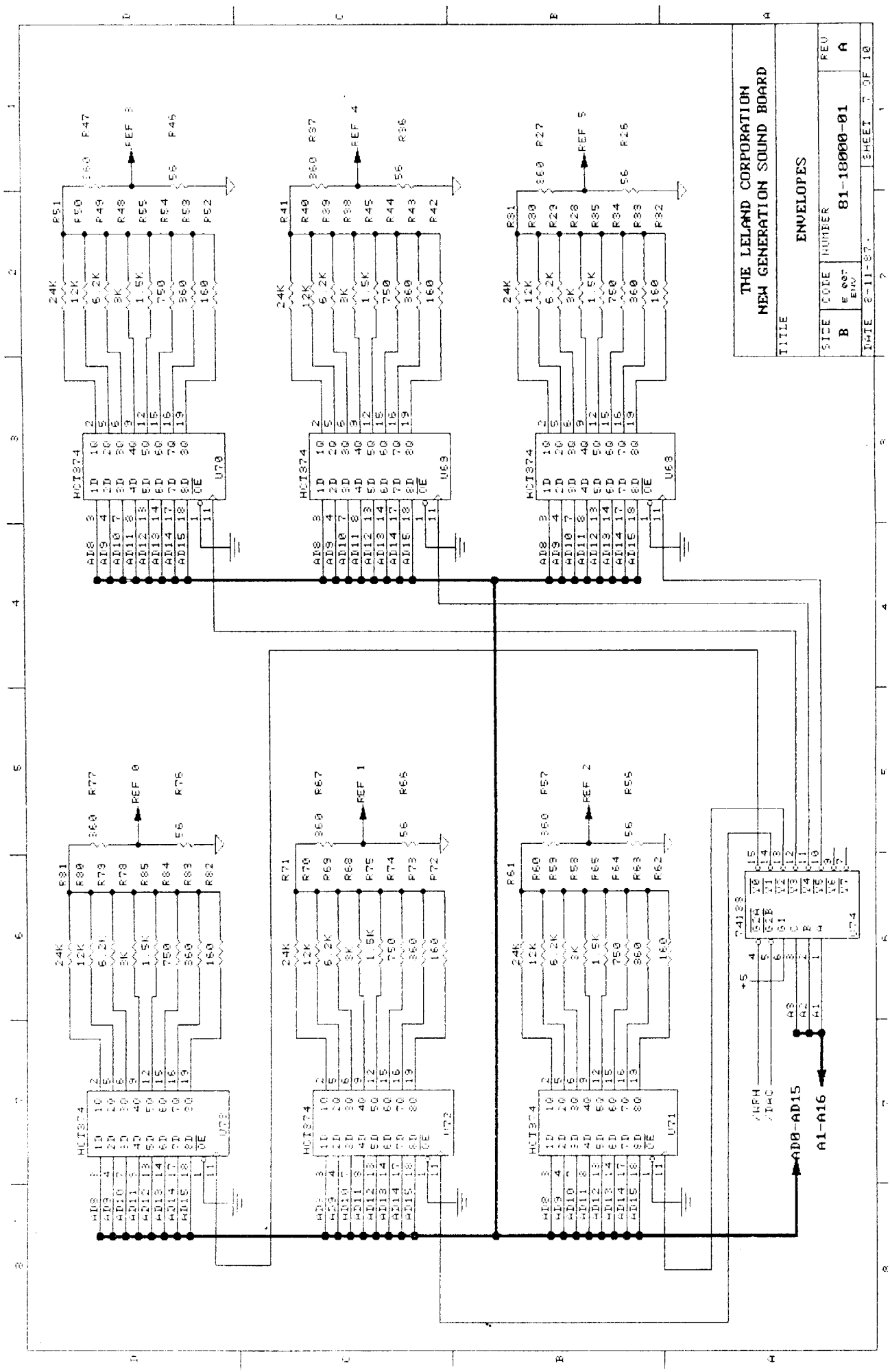
THE LELAND CORPORATION
NEW GENERATION SOUND BOARD
TITLE
ENVELOPES
SIZE
B
CODE
NUMBER
81-18000-01
REV
A
SHEET 7 OF 10
AD0-AD15
A1-A16

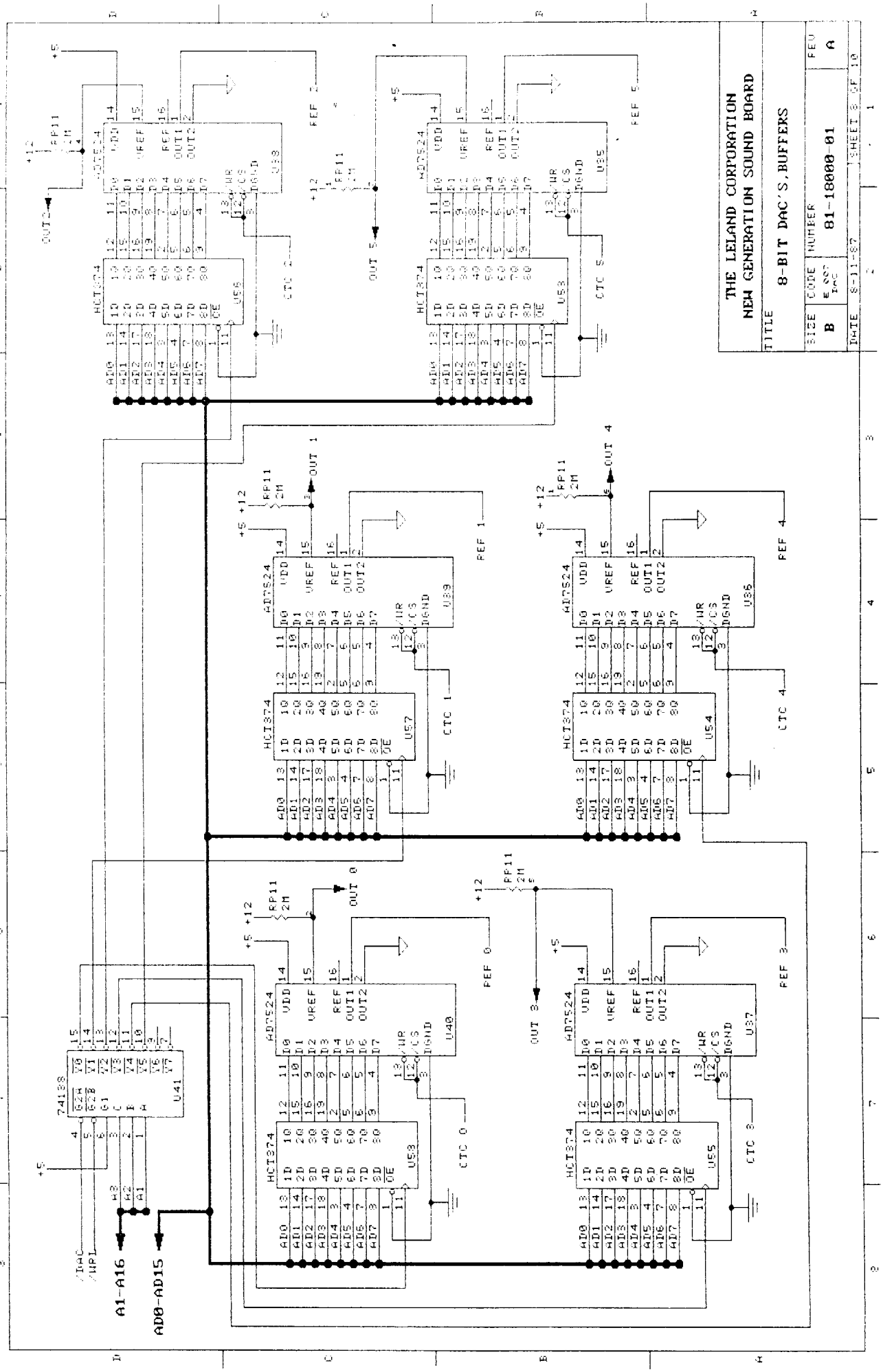
THE LELAND CORPORATION
NEW GENERATION SOUND BOARD
TITLE
8-BIT DAC'S,BUFFERS
SIZE
B
CODE
NUMBER
81-18000-01
REV
A
DATE
8-11-87
SHEET 8 OF 10
A1-A16
AD0-AD15

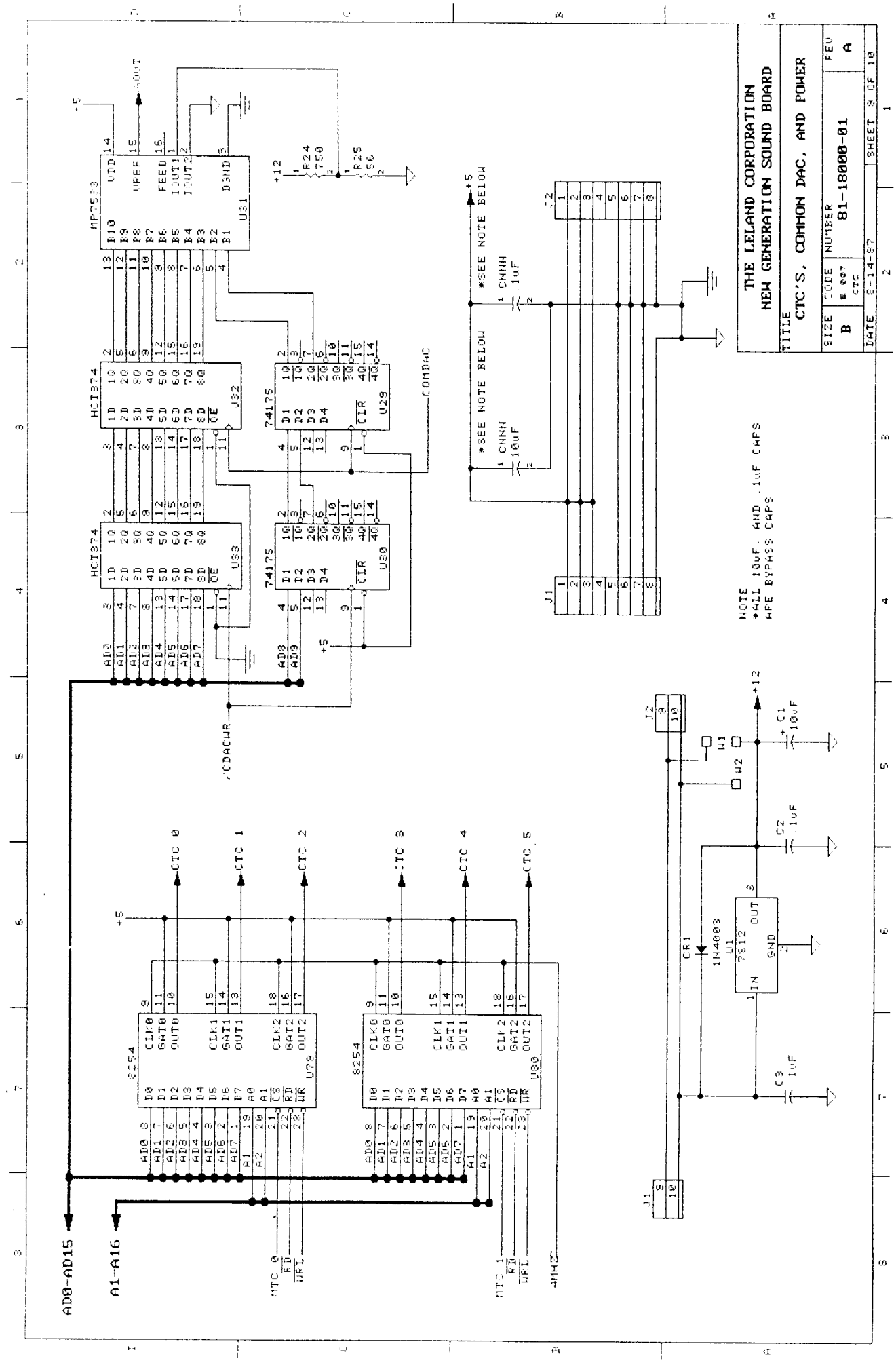
THE LELAND CORPORATION
NEW GENERATION SOUND BOARD
TITLE
CTC'S, COMMON DAC, AND POWER
SIZE B
CODE E 007 CTC
NUMBER 81-18000-01
REV A
DATE 8-14-87
SHEET 3 OF 10
NOTE
*ALL 10uF, AND .1uF CAPS ARE BYPASS CAPS
*SEE NOTE BELOW
1 CHNH 1uF
1 CHNH 10uF
MP7533
HCT374
74175
8254
7812
1N4003
AD0-AD15
A1-A16
/CDACWR
COMDAC
CTC 0
CTC 1
CTC 2
CTC 3
CTC 4
CTC 5
4MHZ

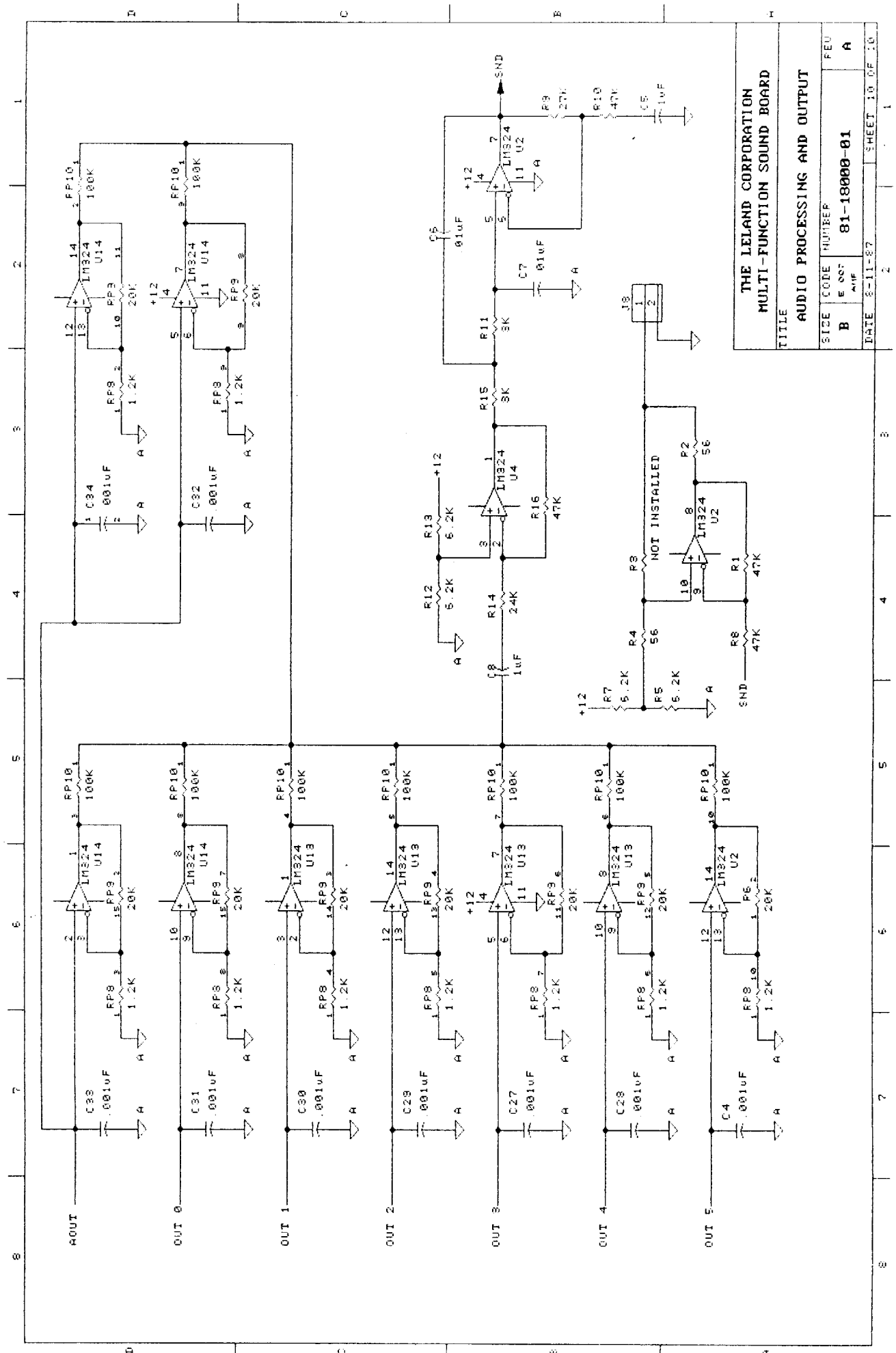
THE LELAND CORPORATION
MULTI-FUNCTION SOUND BOARD
TITLE
AUDIO PROCESSING AND OUTPUT
SIZE B
CODE
NUMBER 81-18000-01
REV A
DATE 8-11-87
SHEET 10 OF 10
NOT INSTALLED
AOUT
OUT 0
OUT 1
OUT 2
OUT 3
OUT 4
OUT 5
+12
SND

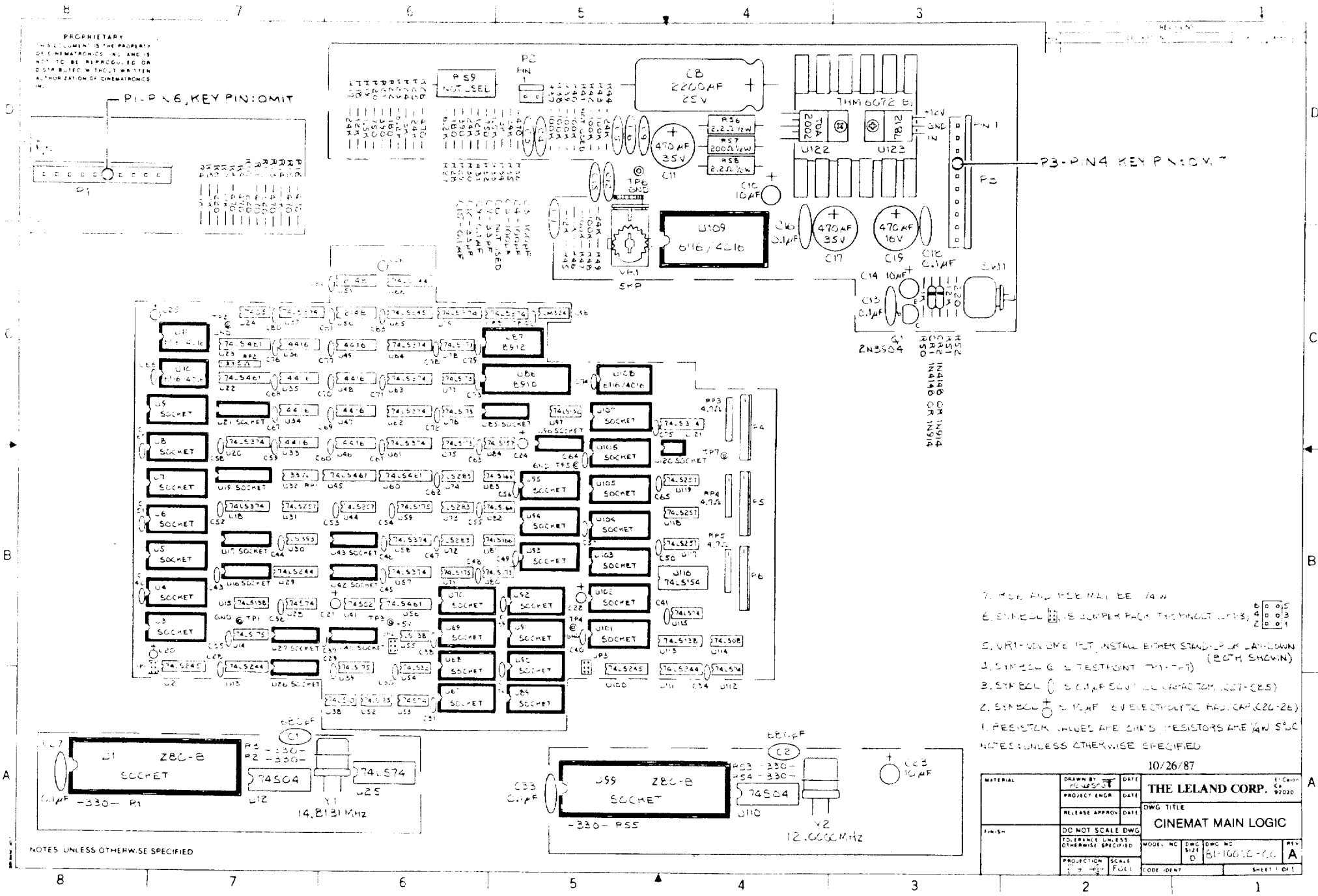
PROPRIETARY
P1-PIN 6, KEY PIN: OMIT
P3-PIN 4 KEY PIN: OMIT
C8 2200µF 25V
THM 6072 B1
U122
U123
U109 6116/4016
VR1 5KP
Q1 2N3904
U1 Z80-B SOCKET
U99 Z80-B SOCKET
Y1 14.8131 MHz
Y2 12.0000 MHz
NOTES: UNLESS OTHERWISE SPECIFIED
10/26/87
THE LELAND CORP.
DWG TITLE
CINEMAT MAIN LOGIC
DO NOT SCALE DWG
REV A

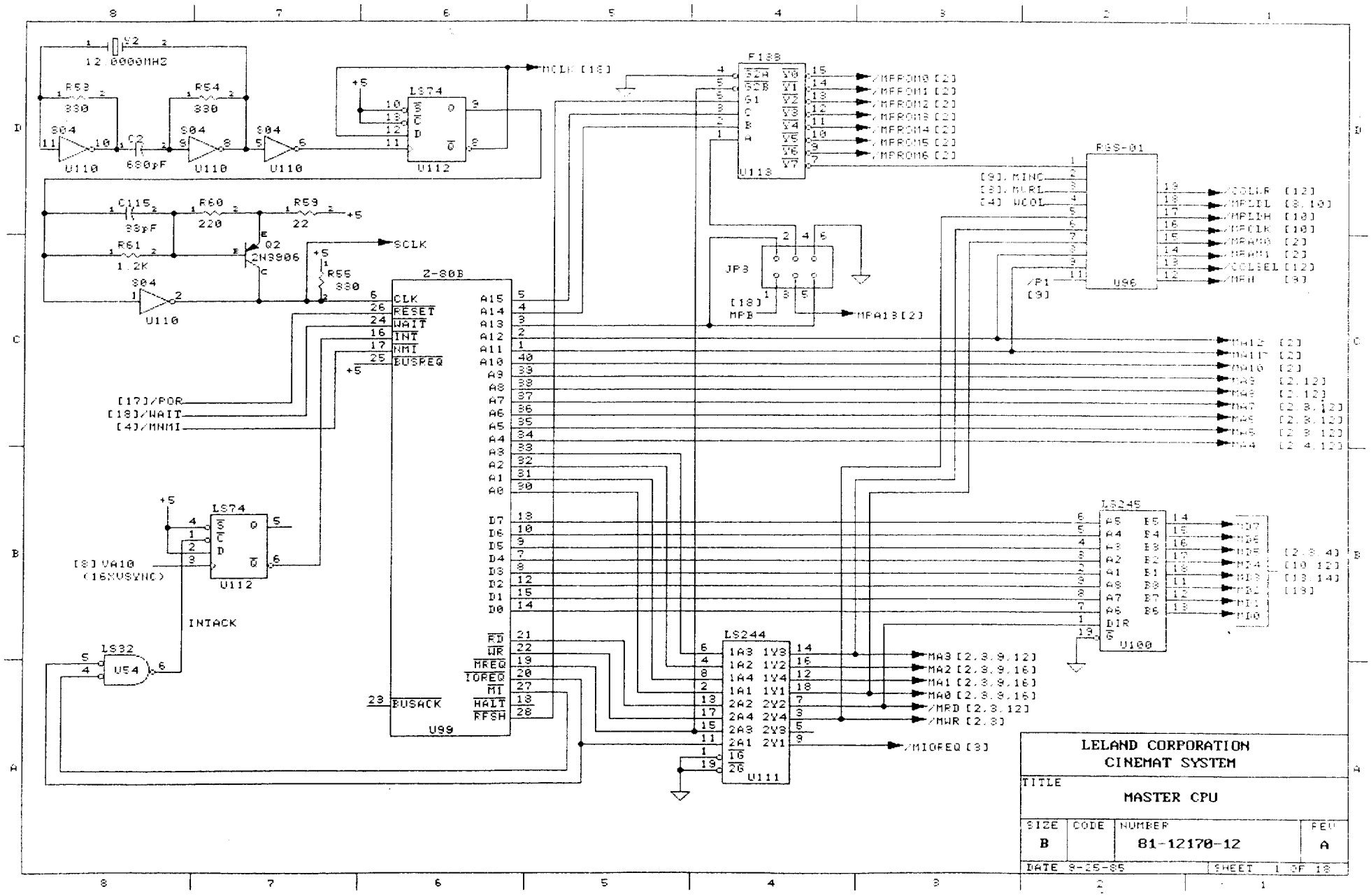
LELAND CORPORATION
CINEMAT SYSTEM
TITLE
MASTER CPU
SIZE
B
CODE
NUMBER
81-12170-12
REV
A
DATE 9-25-85
SHEET 1 OF 18
Z-80B
U99
LS74
U112
LS32
U54
LS244
U111
LS245
U100
RGS-01
U96
F138
U113
JP3
Q2
2N3906
12.0000MHZ
MCLK [18]
SCLK
[17]/POR
[18]/WAIT
[4]/MNMI
[8] VA10
(16XVSYNC)
INTACK
MPA13 [2]
MA3 [2,3,9,12]
MA2 [2,3,9,16]
MA1 [2,3,9,16]
MA0 [2,3,9,16]
/MRD [2,3,12]
/MWR [2,3]
/MIOREQ [3]
/MPROM0 [2]
/MPROM1 [2]
/MPROM2 [2]
/MPROM3 [2]
/MPROM4 [2]
/MPROM5 [2]
/MPROM6 [2]
/COLWR [12]
/MPLDL [8,10]
/MPLDH [10]
/MPCLK [10]
/MPAM0 [2]
/MPAM1 [2]
/COLSEL [12]
/MPH [9]
/P1 [9]
MA12 [2]
MA11 [2]
MA10 [2]
MA9 [2,12]
MA8 [2,12]
MA7 [2,3,12]
MA6 [2,3,12]
MA5 [2,3,12]
MA4 [2,4,12]
MD7
MD6
MD5
MD4
MD3
MD2
MD1
MD0
[2,3,4]
[10,12]
[13,14]
[13]

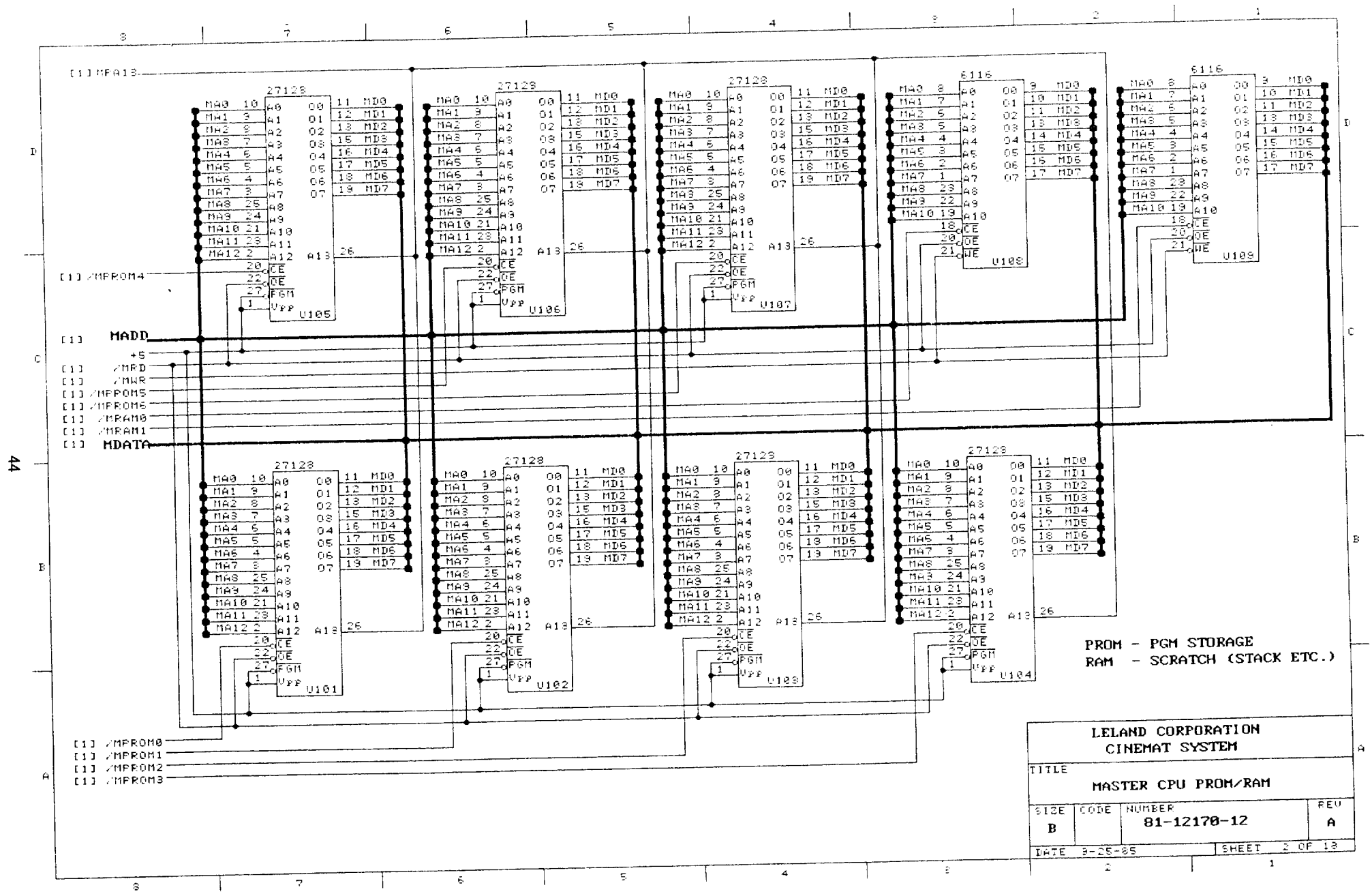
[1] MPA13
[1] /MPROM4
[1] MADD
+5
[1] /MRD
[1] /MWR
[1] /MPROM5
[1] /MPROM6
[1] /MRAM0
[1] /MRAM1
[1] MDATA
[1] /MPROM0
[1] /MPROM1
[1] /MPROM2
[1] /MPROM3
27128
6116
U105
U106
U107
U108
U109
U101
U102
U103
U104
PROM - PGM STORAGE
RAM - SCRATCH (STACK ETC.)
LELAND CORPORATION
CINEMAT SYSTEM
TITLE
MASTER CPU PROM/RAM
SIZE B
CODE
NUMBER 81-12170-12
REV A
DATE 3-25-85
SHEET 2 OF 13

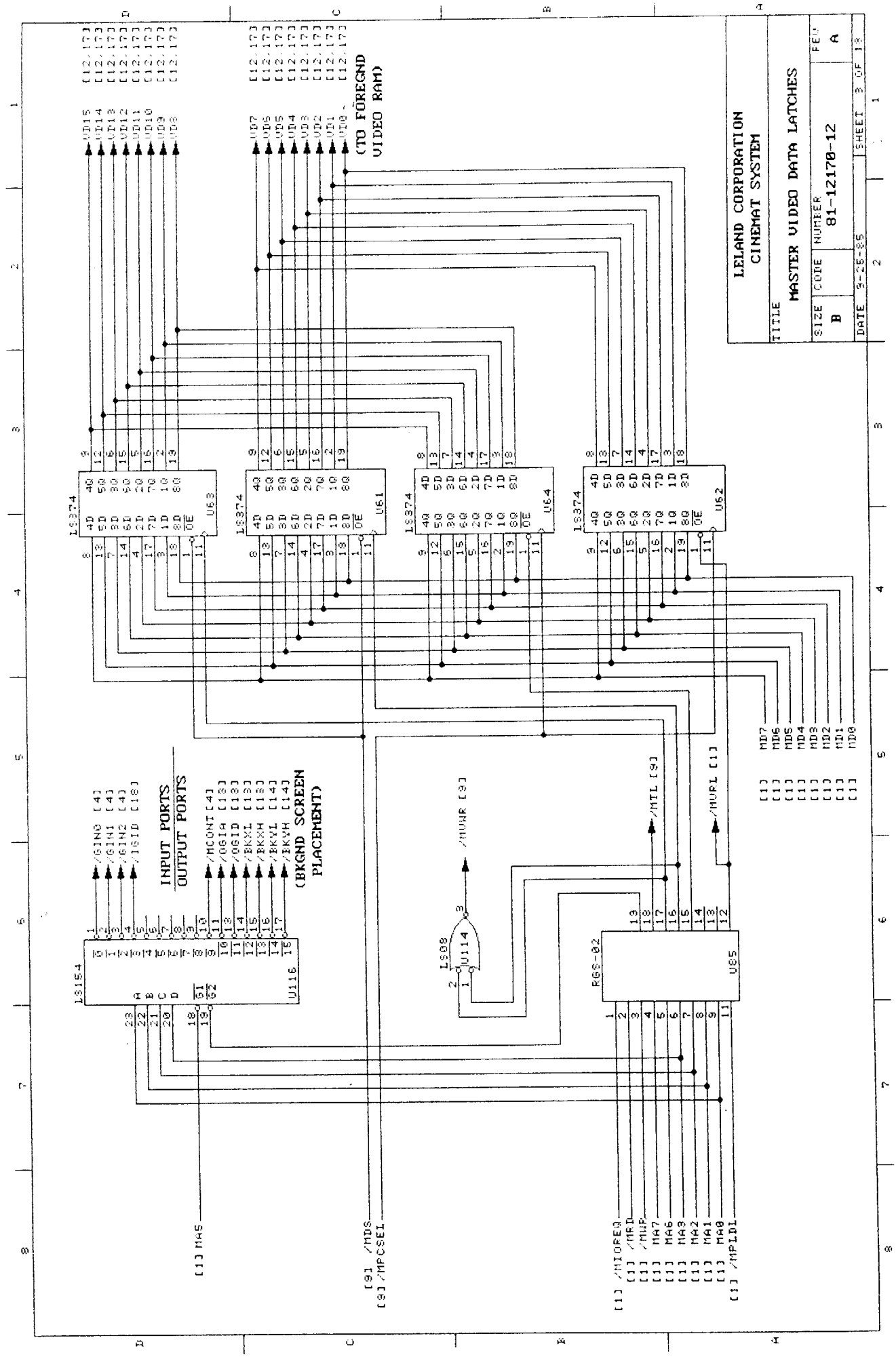
LELAND CORPORATION
CINEMAT SYSTEM
TITLE
MASTER VIDEO DATA LATCHES
SIZE B
CODE
NUMBER 81-12170-12
REV A
DATE 3-25-85
SHEET 3 OF 18
(TO FOREGND VIDEO RAM)
INPUT PORTS
OUTPUT PORTS
(BKGND SCREEN PLACEMENT)
74S374
74S154
74S08
RGS-02

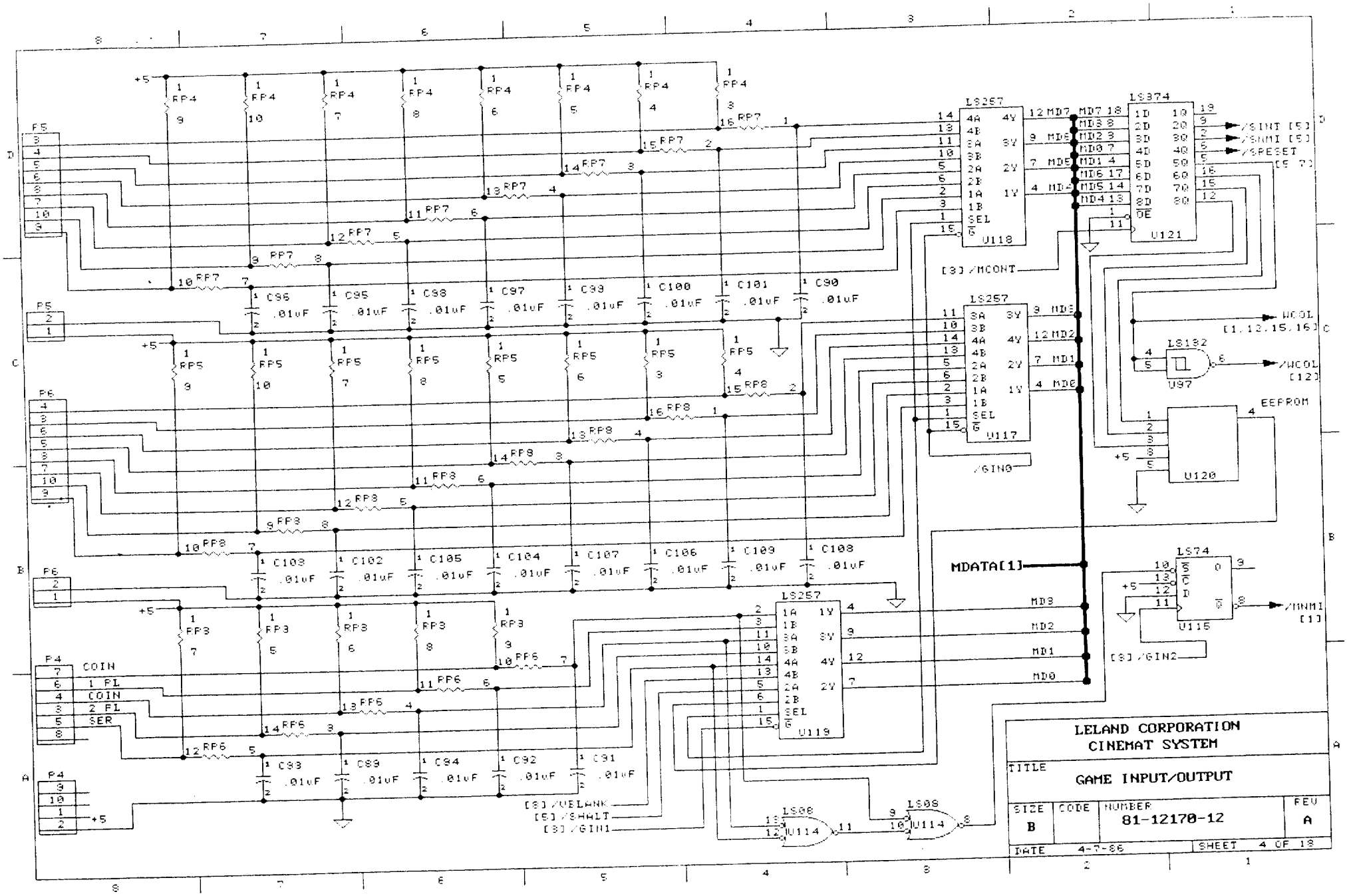
LELAND CORPORATION
CINEMAT SYSTEM
TITLE
GAME INPUT/OUTPUT
SIZE
B
CODE
NUMBER
81-12170-12
REV
A
DATE
4-7-86
SHEET
4 OF 18
MDATA[1]
LS257
U118
U117
U119
LS374
U121
LS132
U97
LS74
U115
LS08
U114
EEPROM
U120
/SINT [5]
/SNMI [5]
/SRESET
[5 7]
WCOL
[1,12,15,16]
/WCOL
[12]
/MNMI
[1]
[3] /MCONT
/GIN0
[3] /GIN2
[3] /VBLANK
[5] /SHALT
[3] /GIN1
COIN
1 PL
COIN
2 PL
SER
RP4
RP5
RP6
RP7
RP8
C96
C95
C98
C97
C99
C100
C101
C90
C103
C102
C105
C104
C107
C106
C109
C108
C93
C89
C94
C92
C91
.01uF

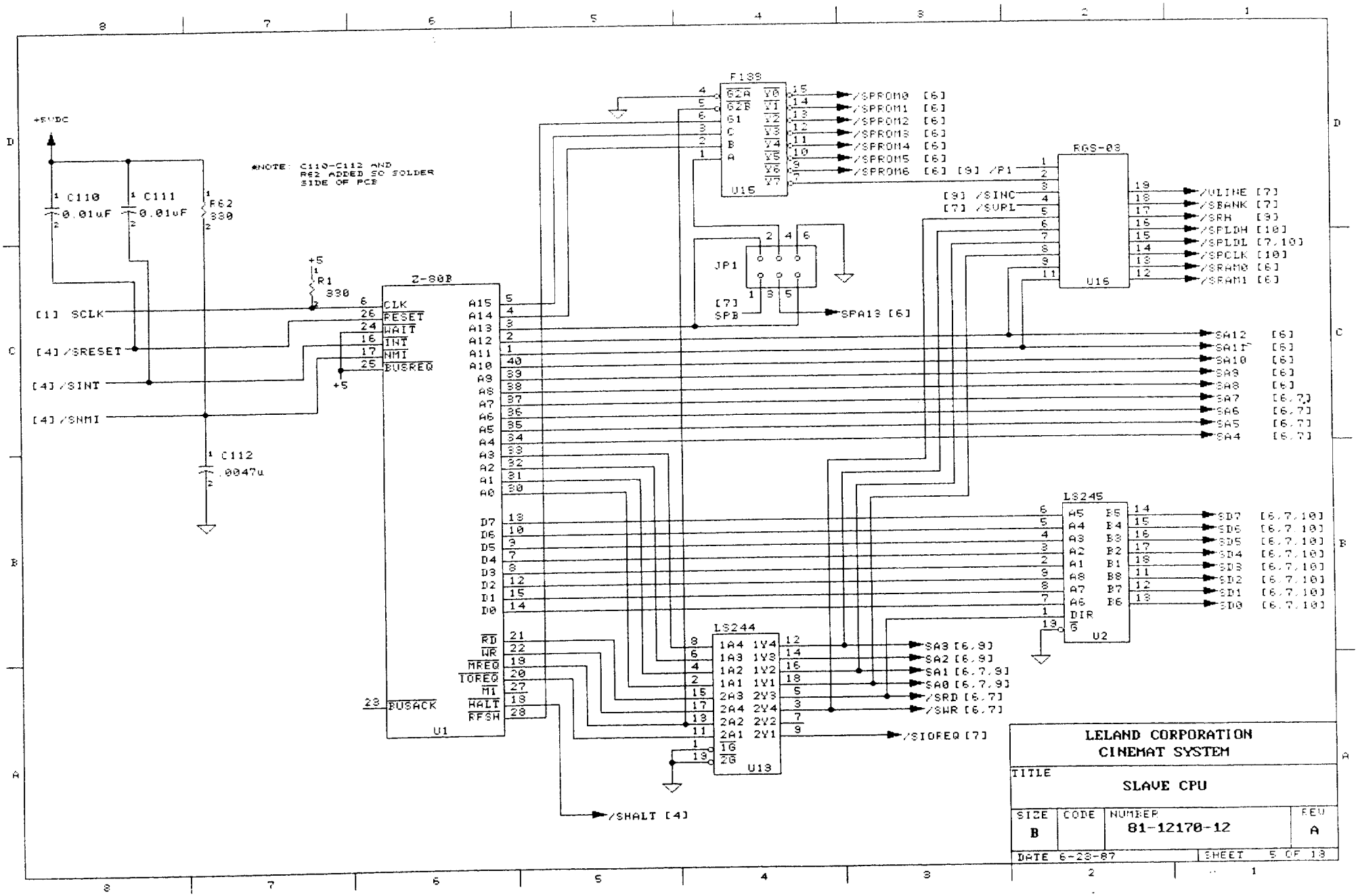

+5VDC
C110 0.01uF
C111 0.01uF
R62 330
*NOTE: C110-C112 AND R62 ADDED SO SOLDER SIDE OF PCB
R1 330
C112 .0047u
[1] SCLK
[4] /SRESET
[4] /SINT
[4] /SNMI
Z-80B
U1
CLK
RESET
WAIT
INT
NMI
BUSREQ
BUSACK
RD
WR
MREQ
IOREQ
M1
HALT
RFSH
F139
U15
/SPROM0 [6]
/SPROM1 [6]
/SPROM2 [6]
/SPROM3 [6]
/SPROM4 [6]
/SPROM5 [6]
/SPROM6 [6]
[9] /P1
[9] /SINC
[7] /SVRL
JP1
[7] SPB
SPA13 [6]
RGS-03
U16
/VLINE [7]
/SBANK [7]
/SRH [9]
/SPLDH [10]
/SPLDL [7,10]
/SPCLK [10]
/SRAM0 [6]
/SRAM1 [6]
SA12 [6]
SA11 [6]
SA10 [6]
SA9 [6]
SA8 [6]
SA7 [6,7]
SA6 [6,7]
SA5 [6,7]
SA4 [6,7]
LS245
U2
SD7 [6,7,10]
SD6 [6,7,10]
SD5 [6,7,10]
SD4 [6,7,10]
SD3 [6,7,10]
SD2 [6,7,10]
SD1 [6,7,10]
SD0 [6,7,10]
LS244
U13
SA3 [6,9]
SA2 [6,9]
SA1 [6,7,9]
SA0 [6,7,9]
/SRD [6,7]
/SWR [6,7]
/SIOREQ [7]
/SHALT [4]
LELAND CORPORATION
CINEMAT SYSTEM
TITLE
SLAVE CPU
SIZE B
CODE
NUMBER 81-12170-12
REV A
DATE 6-23-87
SHEET 5 OF 18

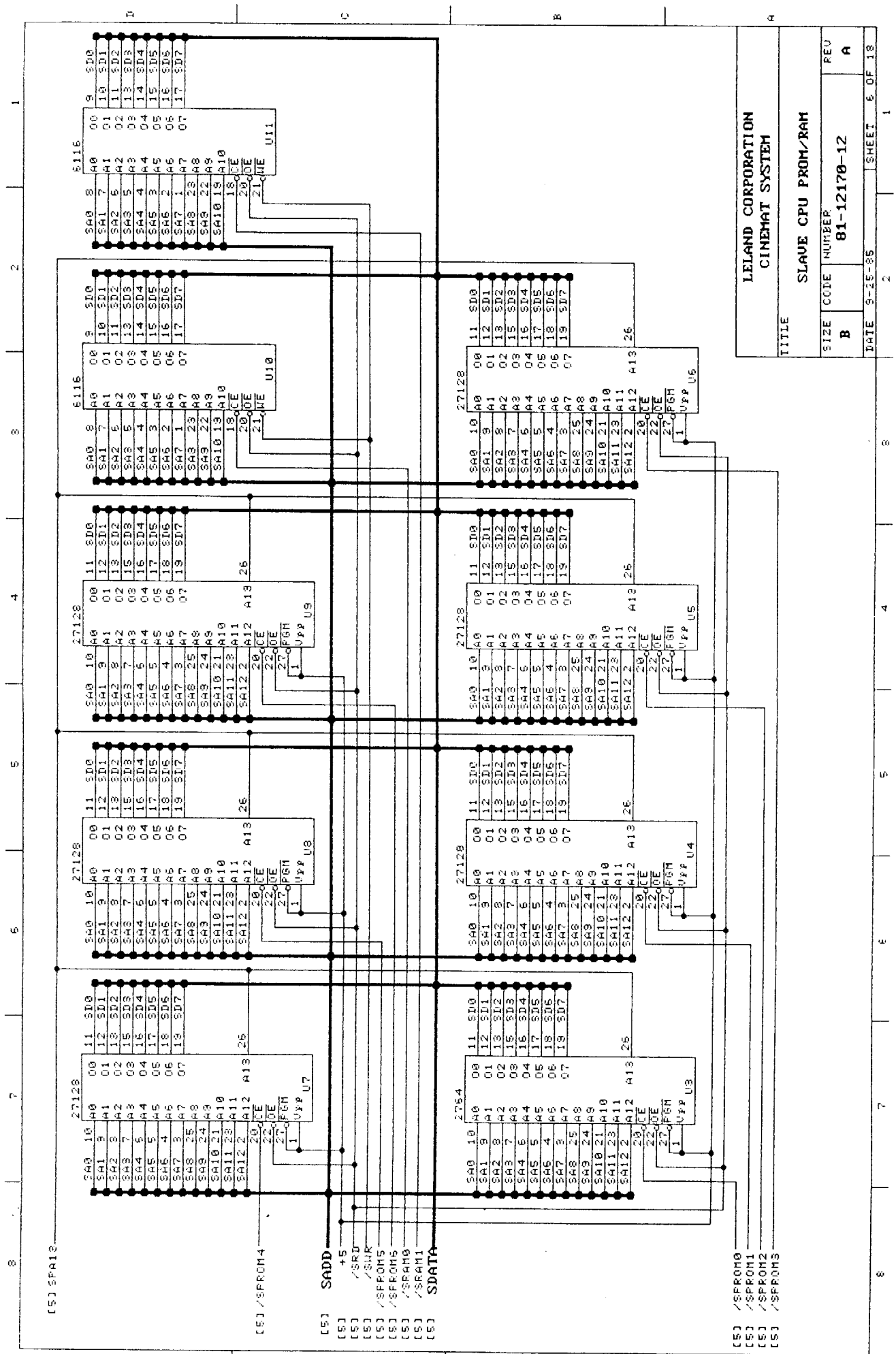
LELAND CORPORATION
CINEMAT SYSTEM
TITLE
SLAVE CPU PROM/RAM
SIZE B
CODE
NUMBER 81-12170-12
REV A
DATE 9-25-85
SHEET 6 OF 18
SADD
SDATA
+5
/SRD
/SWR
/SPROM5
/SPROM6
/SRAM0
/SRAM1
/SPROM0
/SPROM1
/SPROM2
/SPROM3
/SPROM4
SPA12

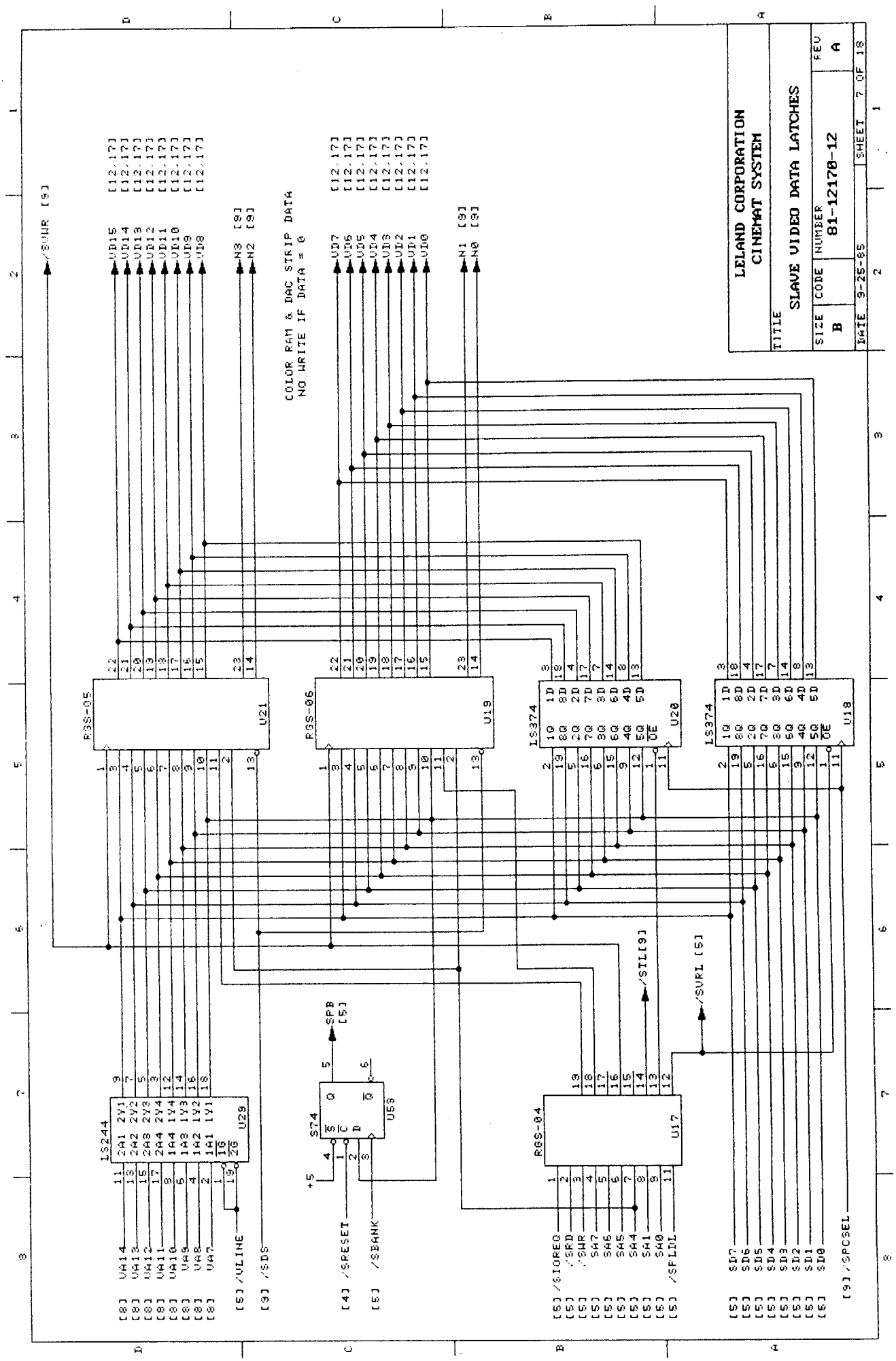
LELAND CORPORATION
CINEMAT SYSTEM
TITLE
SLAVE VIDEO DATA LATCHES
SIZE B
CODE
NUMBER 81-12170-12
REV A
DATE 9-25-85
SHEET 7 OF 18
COLOR RAM & DAC STRIP DATA
NO WRITE IF DATA = 0
/SUWR [9]
VD15 VD14 VD13 VD12 VD11 VD10 VD9 VD8
VD7 VD6 VD5 VD4 VD3 VD2 VD1 VD0
N3 N2 N1 N0
RGS-05
RGS-06
LS374
LS244
S74
RGS-04
U21
U19
U20
U18
U29
U53
U17
/ULINE
/SDS
/SRESET
/SBANK
/SIORED
/SRD
/SWR
/SFLDL
/STL[9]
/SVRL [5]
/SPCSEL
SD7 SD6 SD5 SD4 SD3 SD2 SD1 SD0

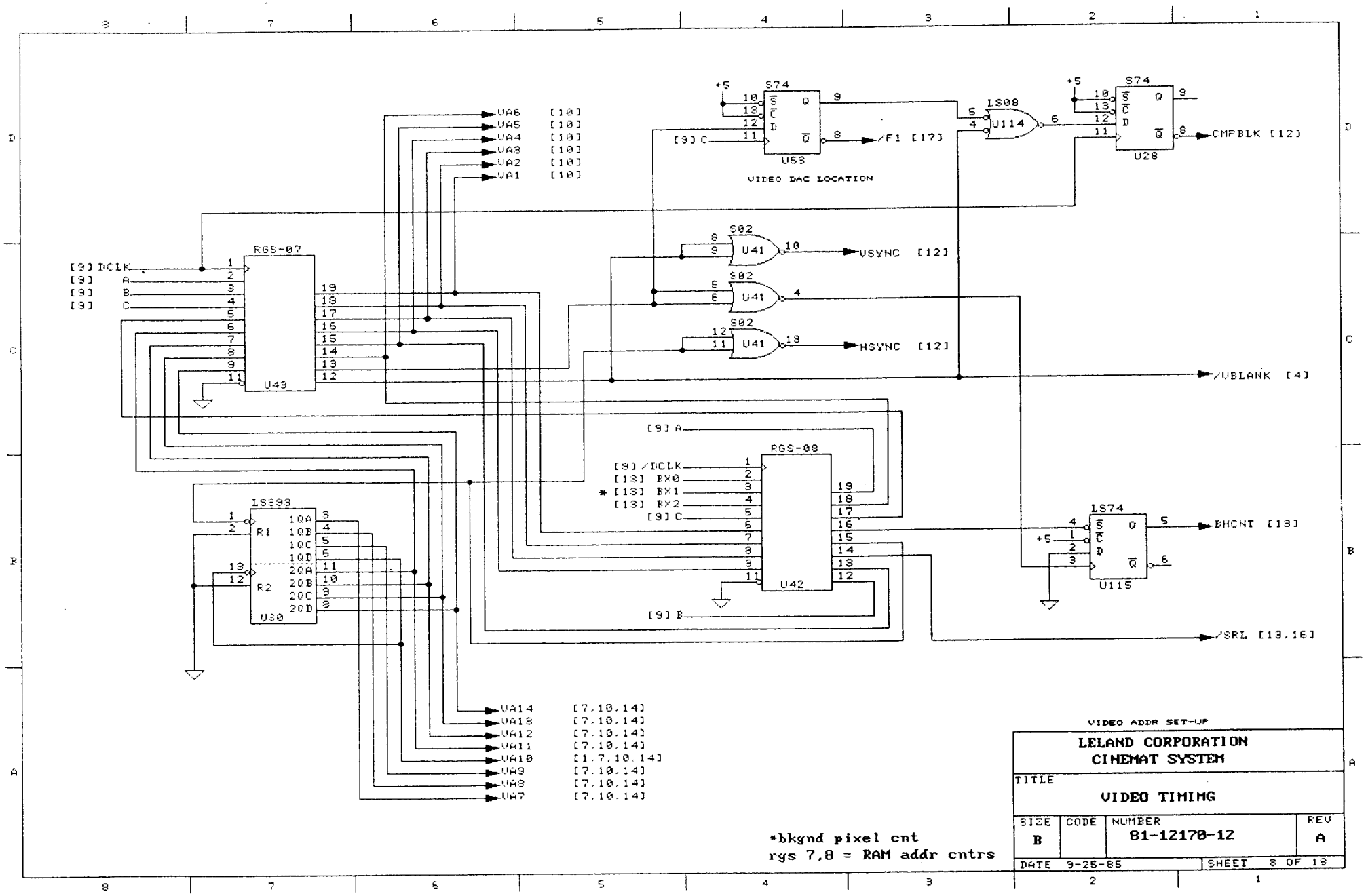

VIDEO DAC LOCATION
S74
U53
/F1 [17]
LS08
U114
U28
CMPBLK [12]
S02
U41
VSYNC [12]
HSYNC [12]
/VBLANK [4]
RGS-07
U43
[9] DCLK
[9] A
[9] B
[9] C
VA6 [10]
VA5 [10]
VA4 [10]
VA3 [10]
VA2 [10]
VA1 [10]
RGS-08
U42
[9] /DCLK
[13] BX0
* [13] BX1
[13] BX2
LS393
U30
LS74
U115
BHCNT [13]
/SRL [13,16]
VA14 [7,10,14]
VA13 [7,10,14]
VA12 [7,10,14]
VA11 [7,10,14]
VA10 [1,7,10,14]
VA9 [7,10,14]
VA8 [7,10,14]
VA7 [7,10,14]
*bkgnd pixel cnt
rgs 7,8 = RAM addr cntrs
VIDEO ADDR SET-UP
LELAND CORPORATION
CINEMAT SYSTEM
TITLE
VIDEO TIMIMG
SIZE B
CODE
NUMBER 81-12170-12
REV A
DATE 9-25-85
SHEET 8 OF 18

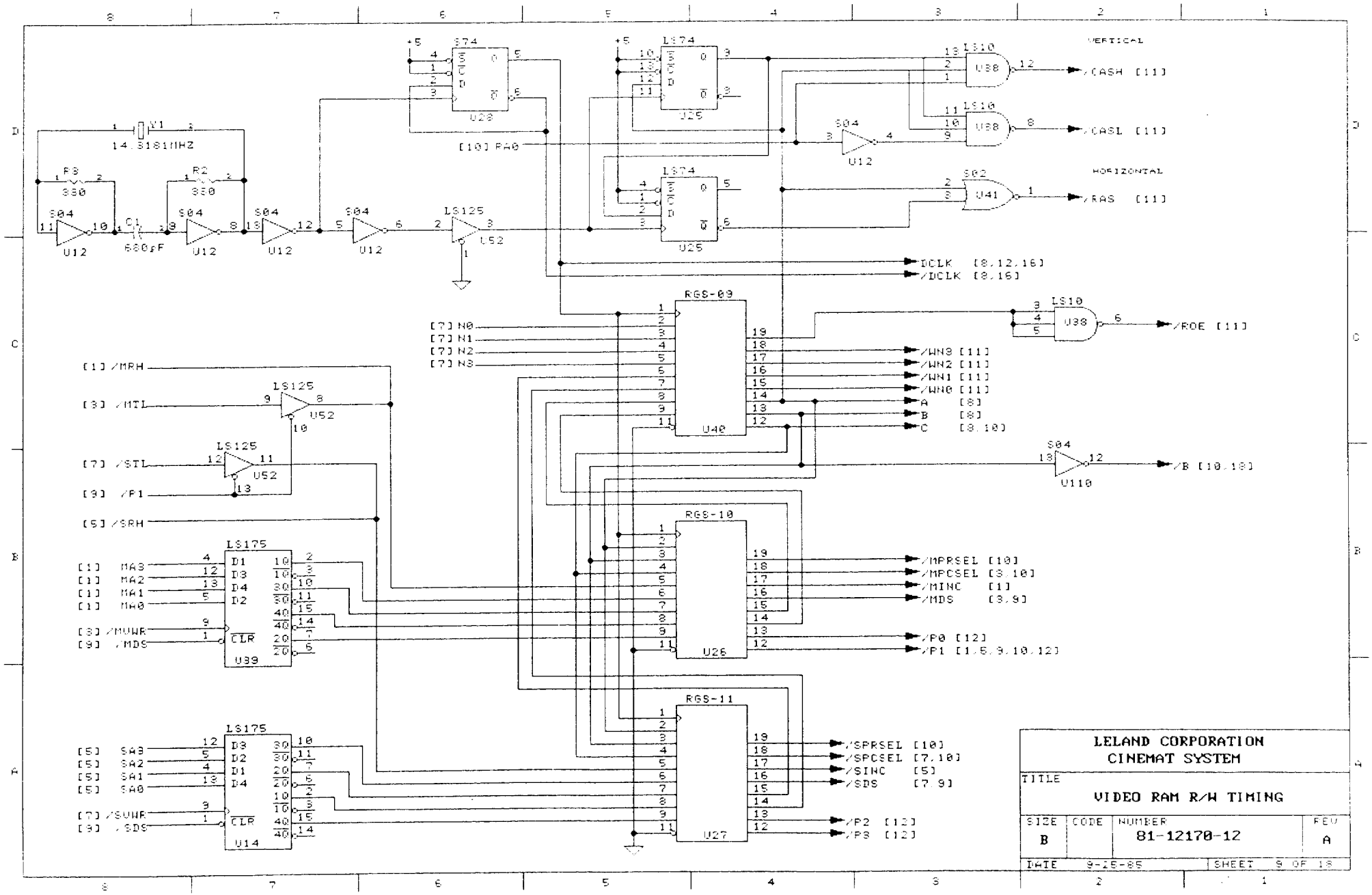

LELAND CORPORATION
CINEMAT SYSTEM
TITLE
VIDEO RAM R/W TIMING
SIZE B
CODE
NUMBER 81-12170-12
REV A
DATE 9-25-85
SHEET 9 OF 18
VERTICAL
HORIZONTAL
/CASH [11]
/CASL [11]
/RAS [11]
/ROE [11]
/B [10,18]
DCLK [8,12,16]
/DCLK [8,16]
/WN3 [11]
/WN2 [11]
/WN1 [11]
/WN0 [11]
A [8]
B [8]
C [8,10]
/MPRSEL [10]
/MPCSEL [3,10]
/MINC [1]
/MDS [3,9]
/P0 [12]
/P1 [1,5,9,10,12]
/SPRSEL [10]
/SPCSEL [7,10]
/SINC [5]
/SDS [7,9]
/P2 [12]
/P3 [12]
[10] RA0
14.3181MHZ
680pF
RGS-09
RGS-10
RGS-11
LS175
LS125
LS74
LS10
S04
S02
S74
U28
U25
U12
U38
U41
U52
U40
U26
U27
U39
U14
U110

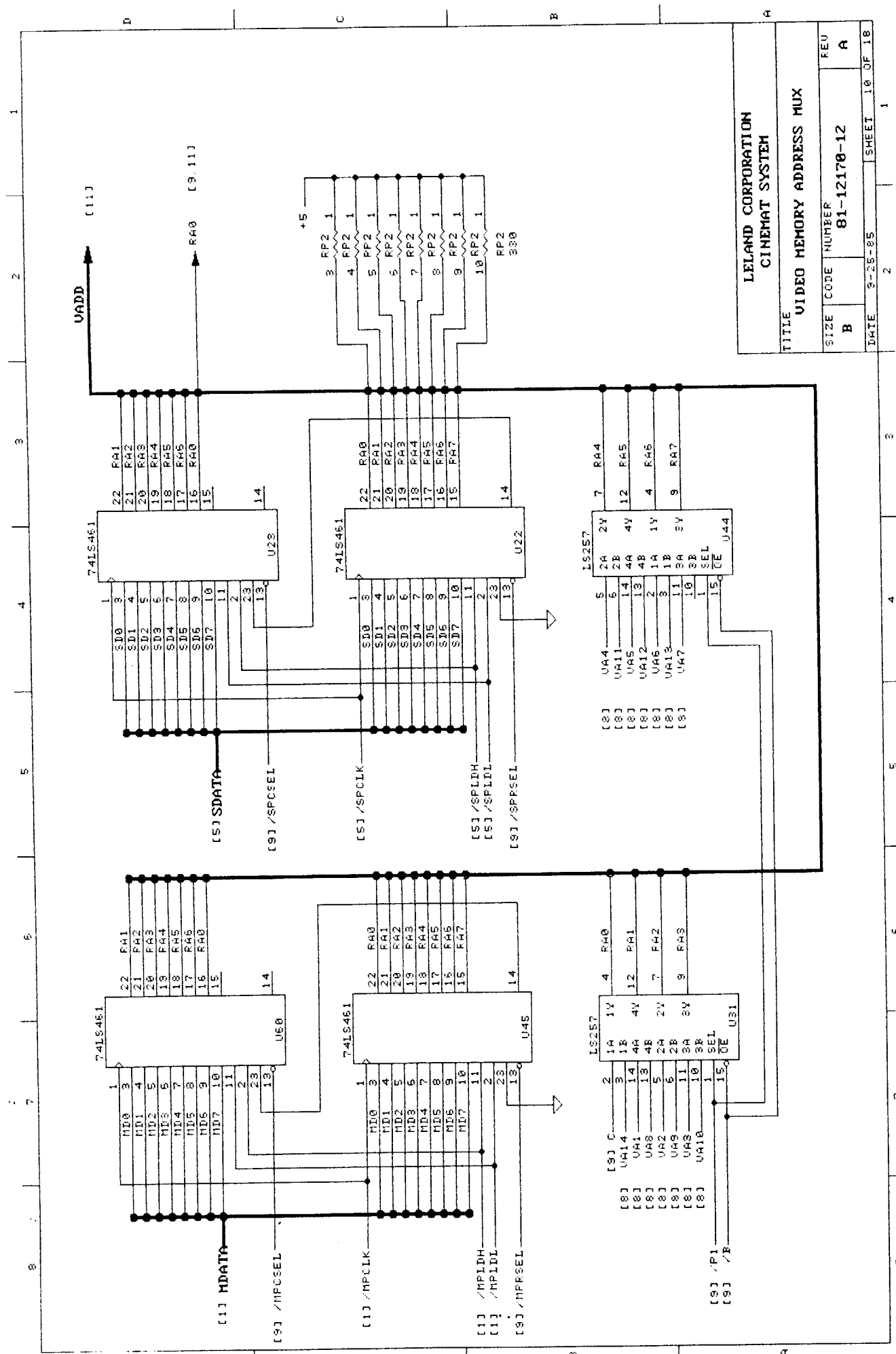
LELAND CORPORATION
CINEMAT SYSTEM
TITLE
VIDEO MEMORY ADDRESS MUX
SIZE B
CODE
NUMBER 81-12170-12
REV A
DATE 9-25-85
SHEET 10 OF 18
VADD [11]
RA0 [9,11]
+5
RP2 330
74LS461
U23
U22
U60
U45
LS257
U44
U31
SDATA
MDATA
/SPCSEL
/SPCLK
/SPLIDH
/SPLIDL
/SPRSEL
/MPCSEL
/MPCLK
/MPIDH
/MPIDL
/MPRSEL
/P1
/B

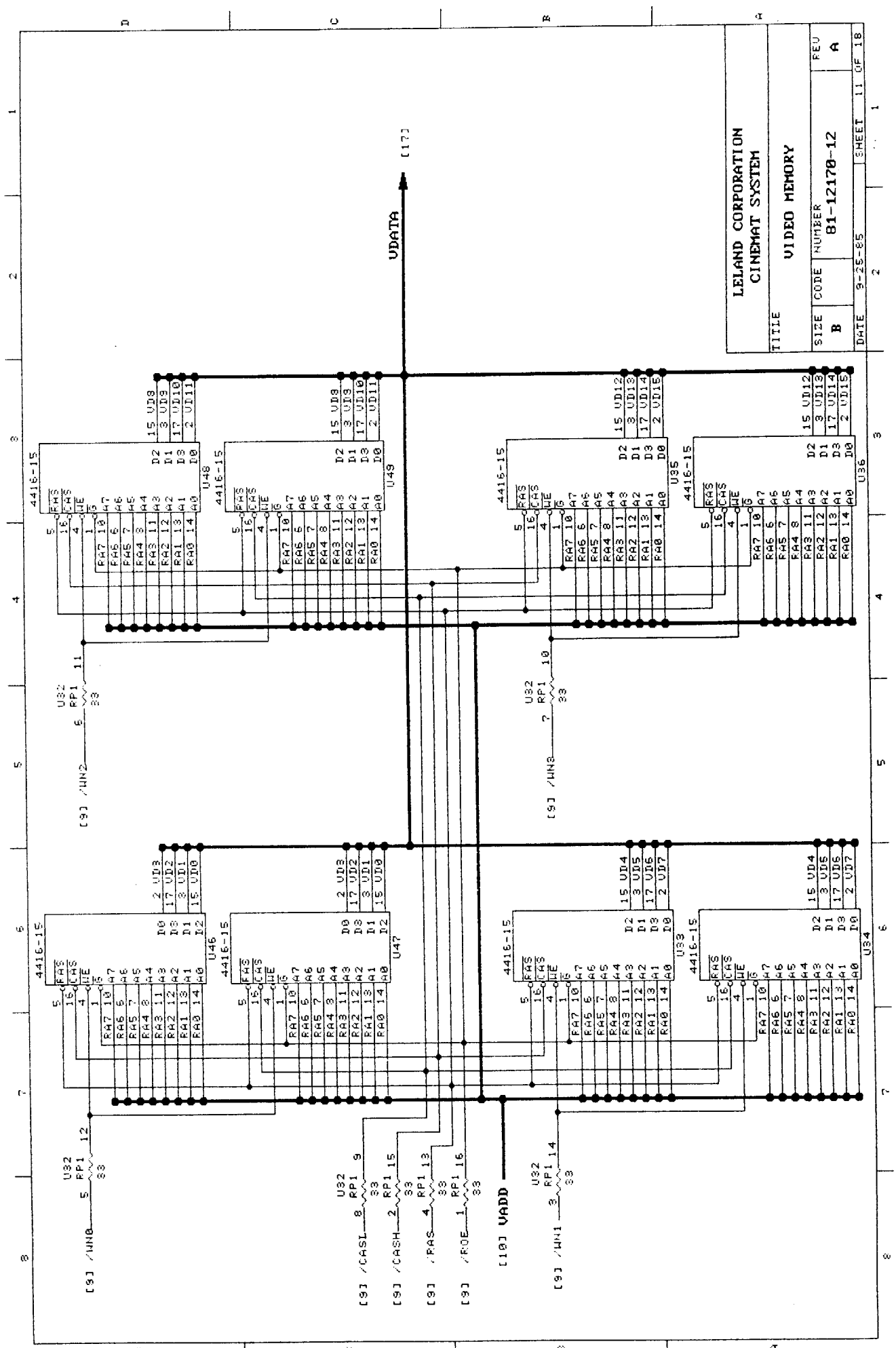
LELAND CORPORATION
CINEMAT SYSTEM
TITLE
VIDEO MEMORY
SIZE
B
CODE
NUMBER
81-12170-12
REV
A
DATE
9-25-85
SHEET 11 OF 18
VDATA
VADD
4416-15
U46
U47
U48
U49
U33
U34
U35
U36
U32 RP1
33
/WR0
/WR1
/WR2
/WR3
/CASL
/CASH
/RAS
/ROE

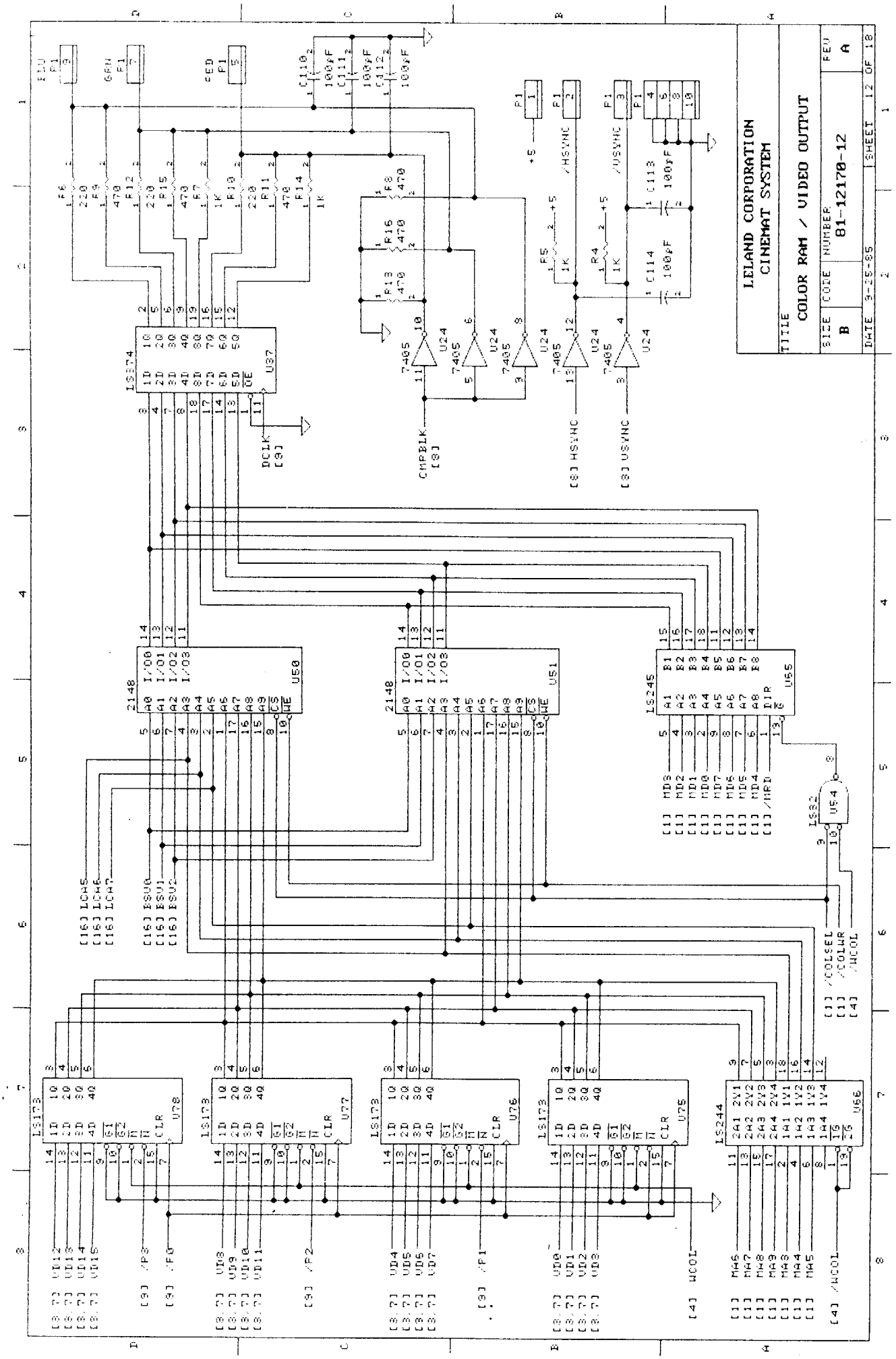
LELAND CORPORATION
CINEMAT SYSTEM
TITLE
COLOR RAM / VIDEO OUTPUT
SIZE
B
CODE
NUMBER
81-12170-12
REV
A
DATE
3-25-85
SHEET 12 OF 18

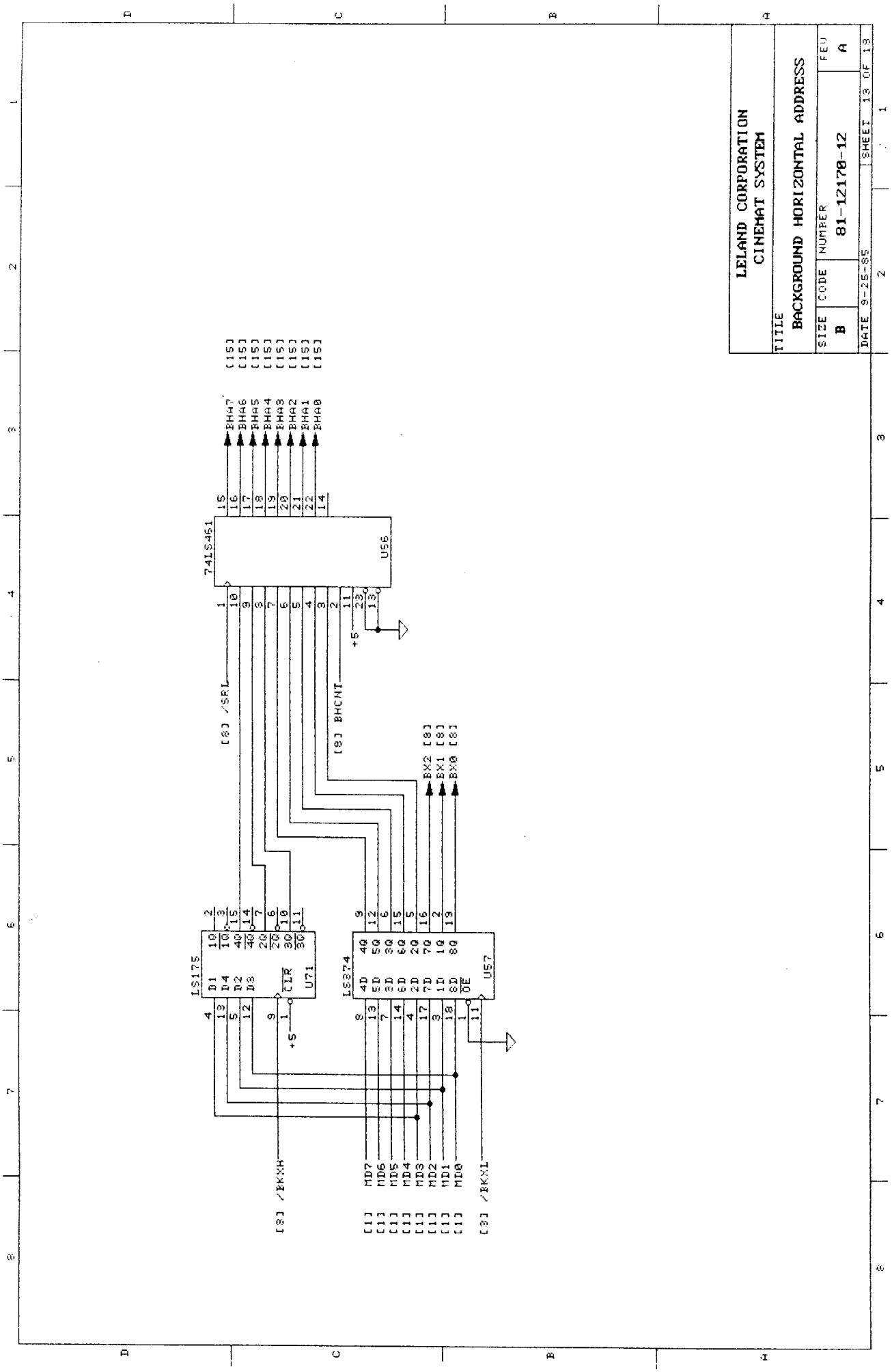
LELAND CORPORATION
CINEMAT SYSTEM
TITLE
BACKGROUND HORIZONTAL ADDRESS
SIZE B
CODE
NUMBER 81-12170-12
REV A
DATE 9-25-85
SHEET 13 OF 19
74LS461
U56
LS175
U71
LS374
U57
+5
[8] /SRL
[8] BHCNT
BHA7 BHA6 BHA5 BHA4 BHA3 BHA2 BHA1 BHA0
BX2 BX1 BX0
MD7 MD6 MD5 MD4 MD3 MD2 MD1 MD0
[8] /BKXH
[8] /BKXL

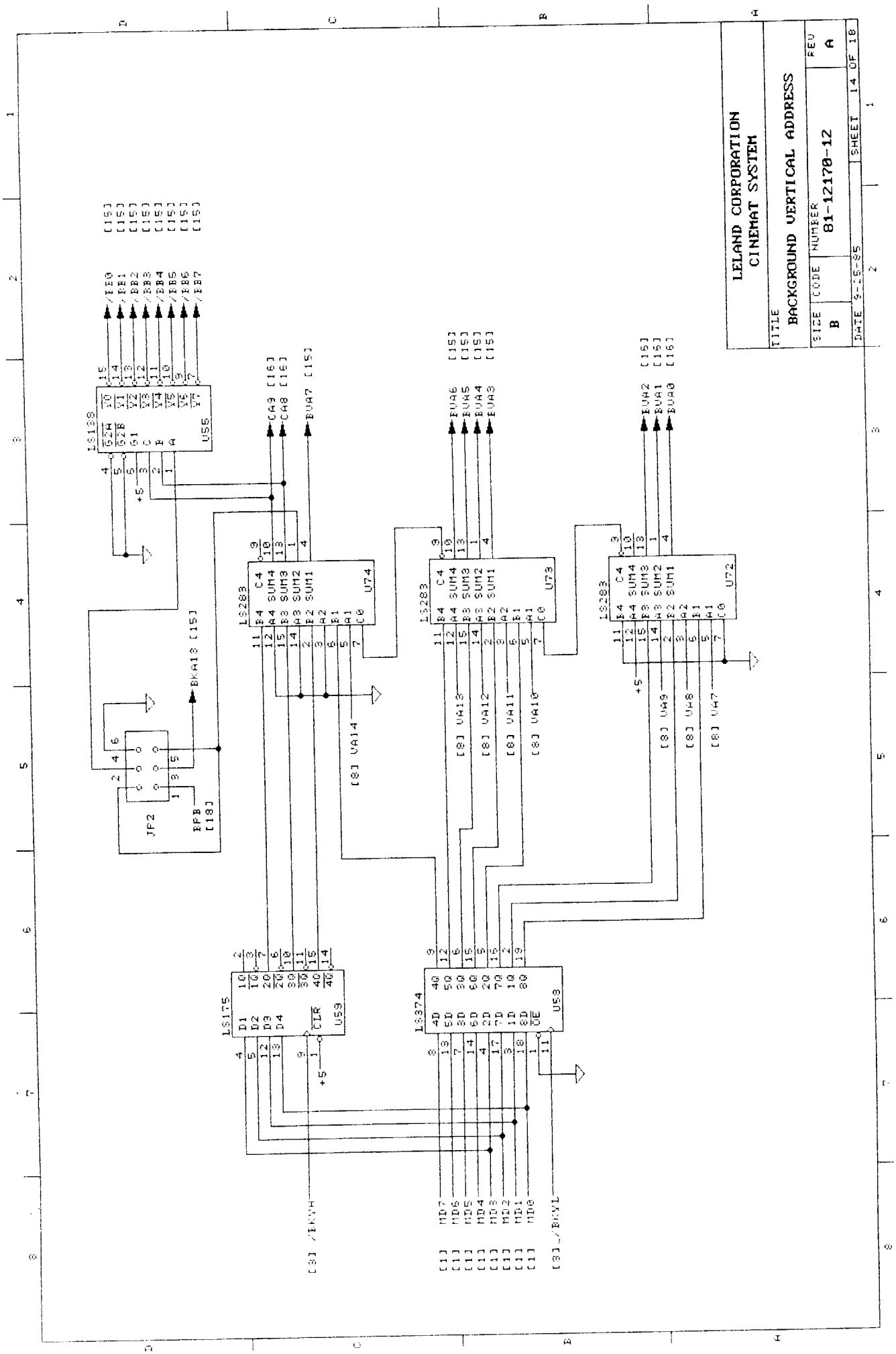
LELAND CORPORATION
CINEMAT SYSTEM
TITLE
BACKGROUND VERTICAL ADDRESS
SIZE B
CODE
NUMBER 81-12170-12
REV A
DATE 8-25-85
SHEET 14 OF 18
LS189
U55
LS283
U74
U73
U72
LS175
U59
LS374
U58
JP2
+5
/EB0
/EB1
/EB2
/EB3
/EB4
/EB5
/EB6
/EB7
EFB [18]
BKA13 [15]
[8] VA14
[8] VA13
[8] VA12
[8] VA11
[8] VA10
[8] VA9
[8] VA8
[8] VA7
[8] /BKVH
[8] /BKVL
MD7
MD6
MD5
MD4
MD3
MD2
MD1
MD0

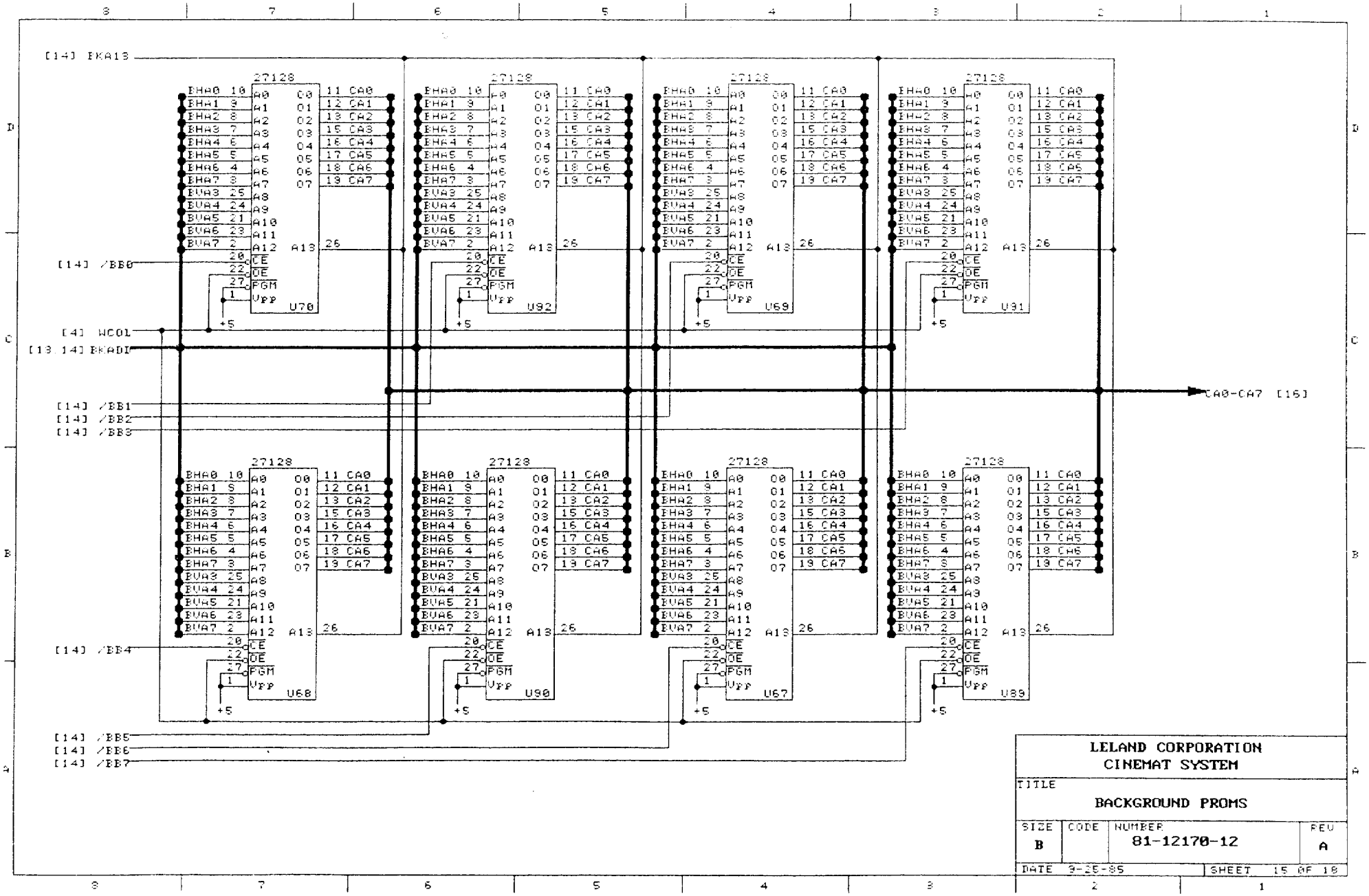
[14] BKA13
[14] /BB0
[4] WCOL
[13,14] BKADI
[14] /BB1
[14] /BB2
[14] /BB3
[14] /BB4
[14] /BB5
[14] /BB6
[14] /BB7
CA0-CA7 [16]
27128
U70
U92
U69
U91
U68
U90
U67
U89
LELAND CORPORATION
CINEMAT SYSTEM
TITLE
BACKGROUND PROMS
SIZE
B
CODE
NUMBER
81-12170-12
REV
A
DATE 9-25-85
SHEET 15 OF 18

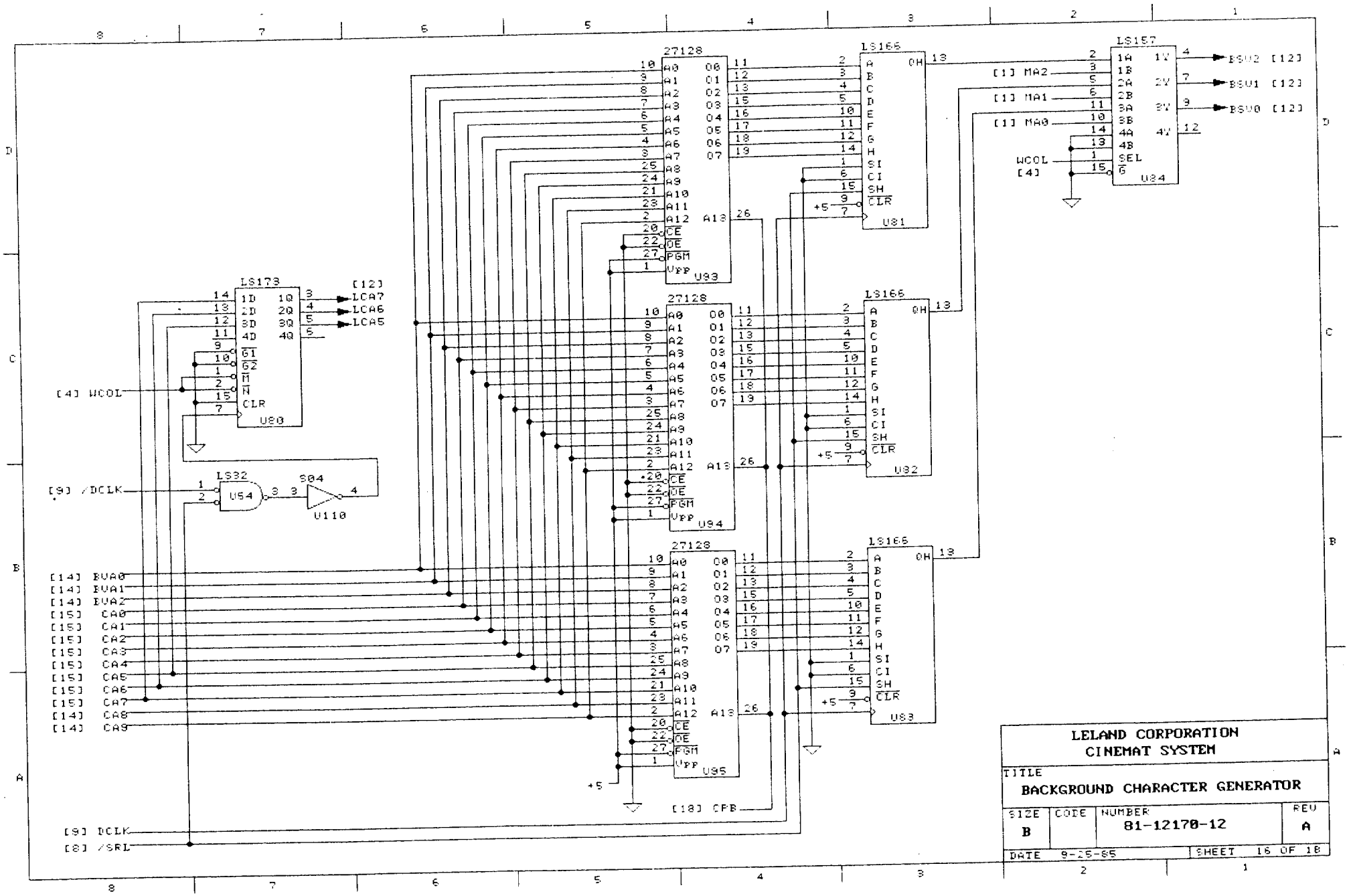
LELAND CORPORATION
CINEMAT SYSTEM
TITLE
BACKGROUND CHARACTER GENERATOR
SIZE
B
CODE
NUMBER
81-12170-12
REV
A
DATE 9-25-85
SHEET 16 OF 18
27128
LS166
LS157
LS173
LS32
S04
U54
U110
U80
U81
U82
U83
U84
U93
U94
U95
[1] MA2
[1] MA1
[1] MA0
WCOL
[4]
BSV2 [12]
BSV1 [12]
BSV0 [12]
[12]
LCA7
LCA6
LCA5
[4] WCOL
[9] /DCLK
[14] BVA0
[14] BVA1
[14] BVA2
[15] CA0
[15] CA1
[15] CA2
[15] CA3
[15] CA4
[15] CA5
[15] CA6
[15] CA7
[14] CA8
[14] CA9
[18] CPB
[9] DCLK
[8] /SRL

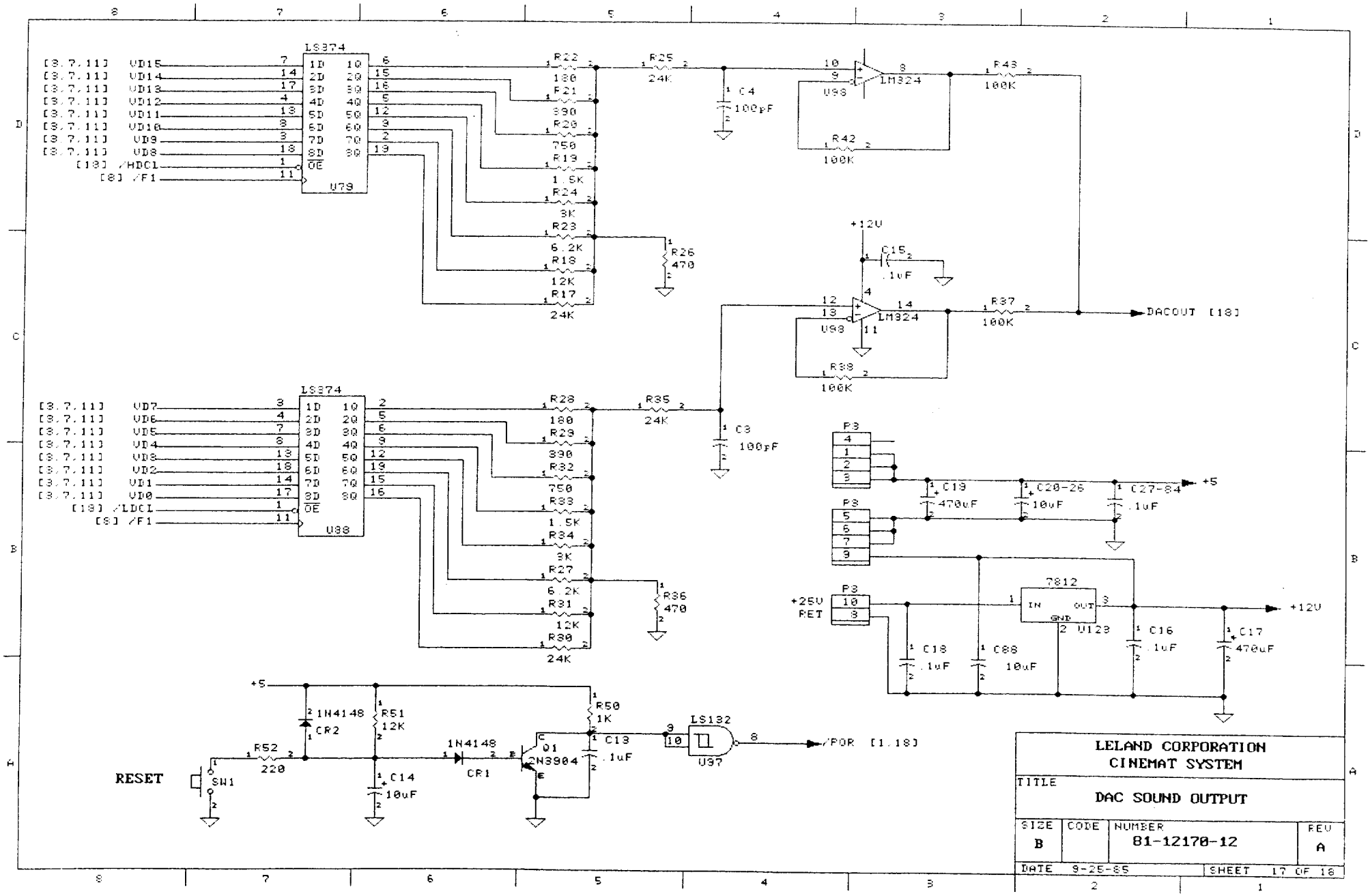
LELAND CORPORATION
CINEMAT SYSTEM
TITLE
DAC SOUND OUTPUT
SIZE
B
CODE
NUMBER
81-12170-12
REV
A
DATE 9-25-85
SHEET 17 OF 18
RESET
SW1
LS374
U79
U88
LM324
U98
7812
U123
LS132
U97
2N3904
Q1
1N4148
CR1
CR2
DACOUT [18]
/POR [1,18]
+12V
+5
+25V
RET
P3
[3,7,11] VD15
[3,7,11] VD14
[3,7,11] VD13
[3,7,11] VD12
[3,7,11] VD11
[3,7,11] VD10
[3,7,11] VD9
[3,7,11] VD8
[18] /HDCL
[8] /F1
[3,7,11] VD7
[3,7,11] VD6
[3,7,11] VD5
[3,7,11] VD4
[3,7,11] VD3
[3,7,11] VD2
[3,7,11] VD1
[3,7,11] VD0
[18] /LDCL
[8] /F1
R22 180
R21 390
R20 750
R19 1.5K
R24 3K
R23 6.2K
R18 12K
R17 24K
R26 470
R25 24K
C4 100pF
R43 100K
R42 100K
C15 .1uF
R37 100K
R38 100K
R28 180
R29 390
R32 750
R33 1.5K
R34 3K
R27 6.2K
R31 12K
R30 24K
R36 470
R35 24K
C3 100pF
C19 470uF
C20-26 10uF
C27-84 .1uF
C18 .1uF
C88 10uF
C16 .1uF
C17 470uF
R52 220
R51 12K
C14 10uF
R50 1K
C13 .1uF

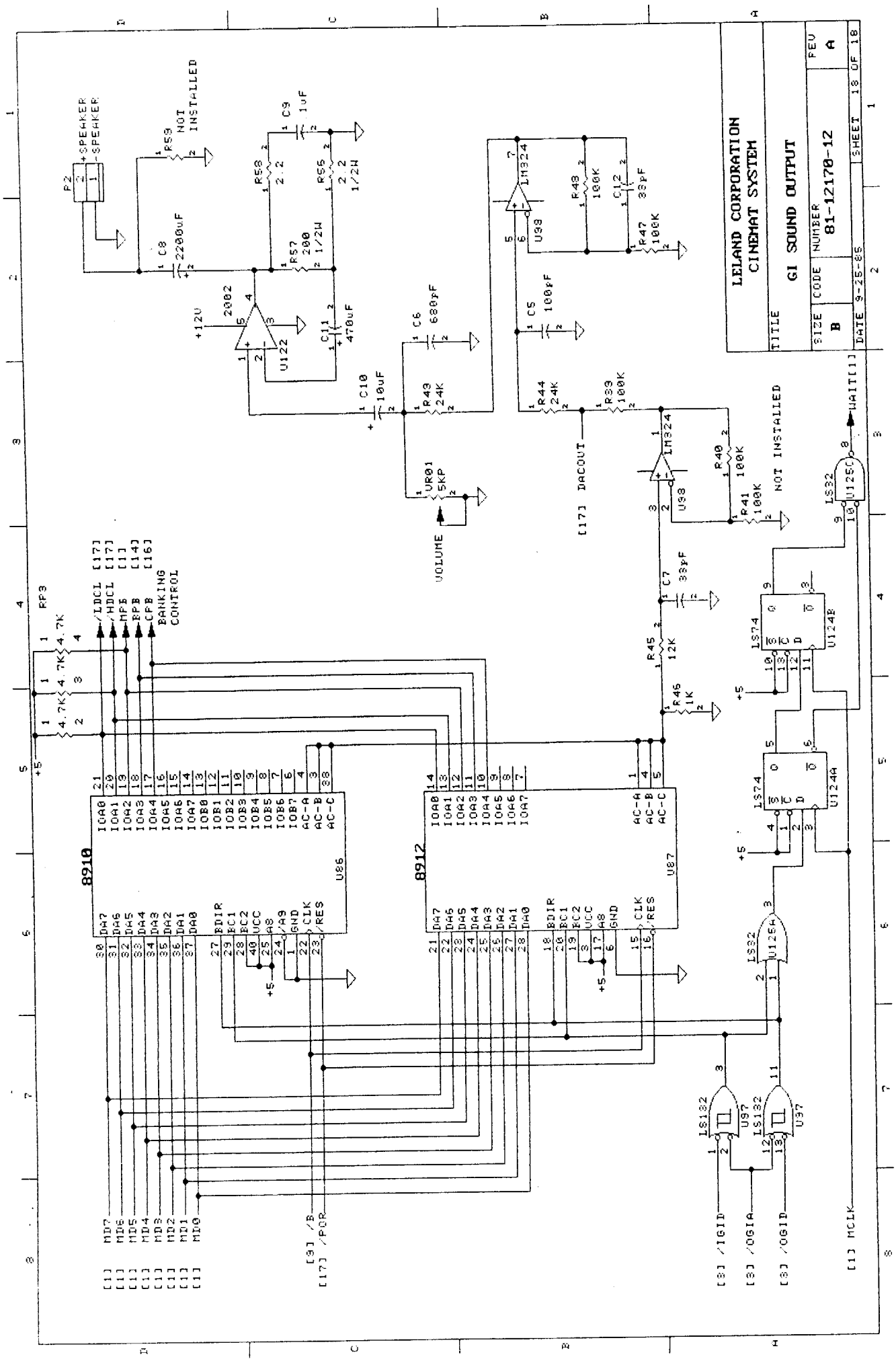
LELAND CORPORATION
CINEMAT SYSTEM
TITLE
GI SOUND OUTPUT
SIZE
B
CODE
NUMBER
81-12170-12
REV
A
DATE 9-25-85
SHEET 18 OF 18
8910
8912
U86
U87
U122
U98
U124A
U124B
U125C
U97
LM324
LS74
LS132
LS32
VOLUME
NOT INSTALLED
BANKING CONTROL
[17] DACOUT
WAIT[1]
[1] MCLK
[3] /IGID
[3] /OGIA
[3] /OGID
[3] /B
[17] /POR
[1] MD7
[1] MD6
[1] MD5
[1] MD4
[1] MD3
[1] MD2
[1] MD1
[1] MD0
+12V
+5
SPEAKER
NOT INSTALLED

ACTION CABINET WIRING DIAGRAM

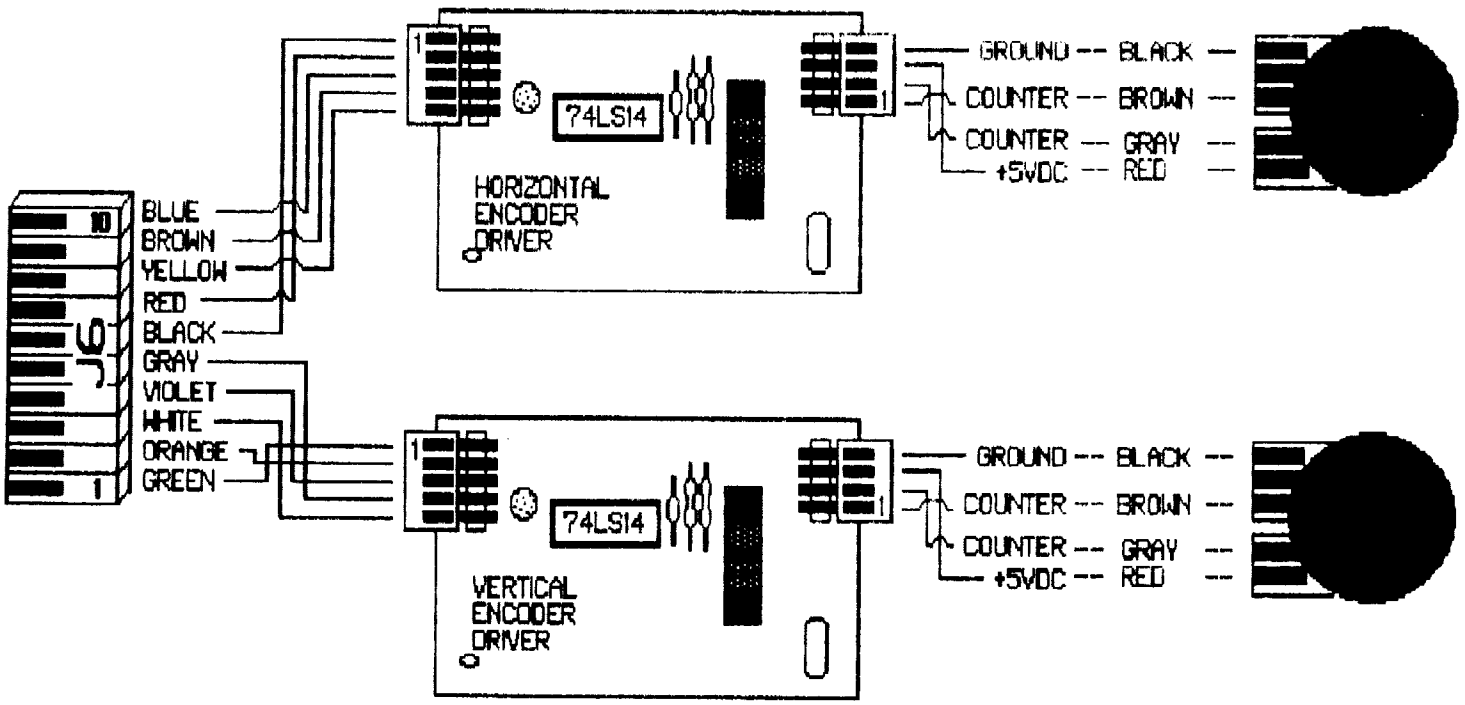

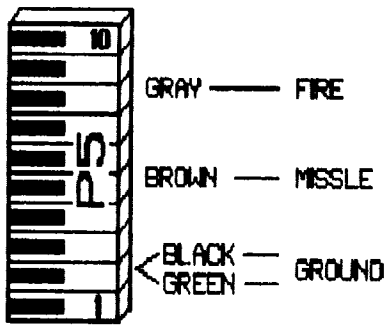

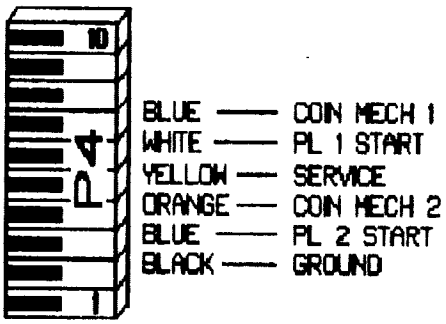

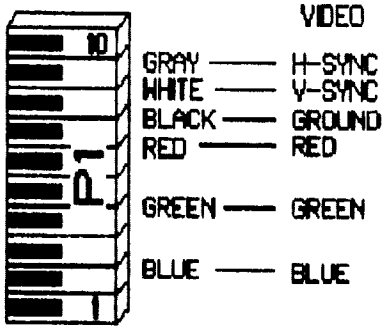

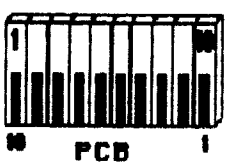

POWER

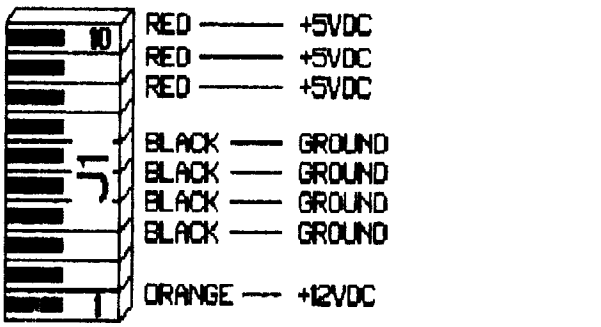

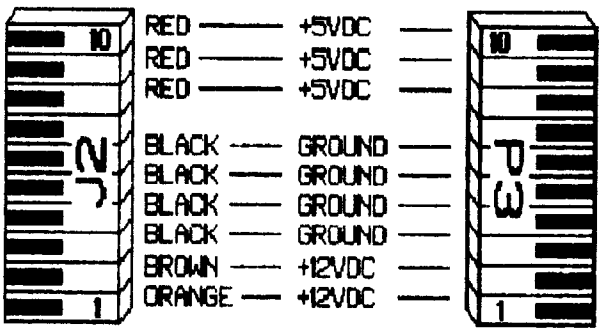

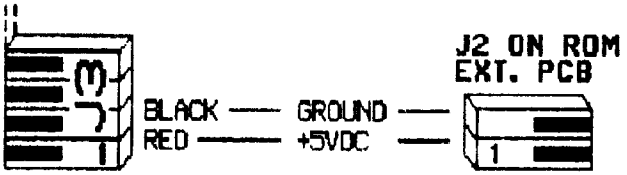

NOTE:

PCB PIN NUMBERS ARE OPPOSITE TO THE PIN NUMBERS MOLDED ON HARNESS CONNECTORS

1841 Friendship Dr., El Cajon, CA 92020-9981
619-562-7000 Telex - 4974293 Cintron Fax - 619-562-9468

LELAND PART # 72-11700-01

THE LELAND CORP. 1986 ALL RIGHTS RESERVED