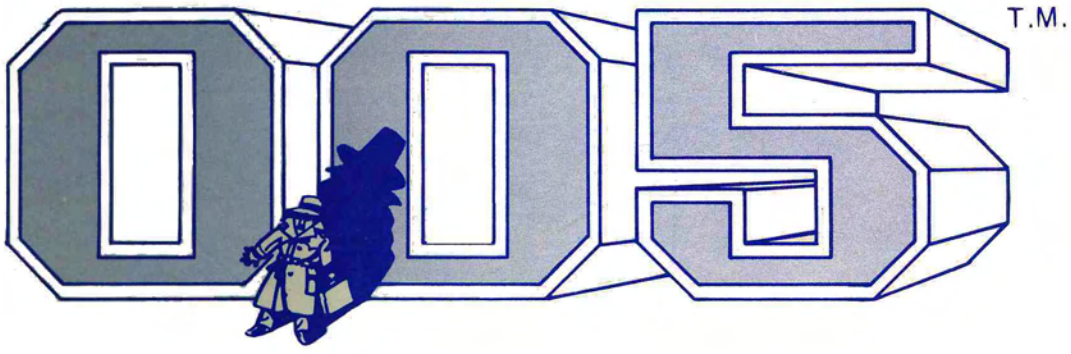

Owner's Manual

Manual Part No. 420-0692

005[tm]

OPERATING INSTRUCTIONS

AND

SERVICE MANUAL

MANUFACTURED BY

TLX 910-335-1621

005 OWNER'S MANUAL

Copyright - 1982 by SEGA/Gremlin, All Rights Reserved

INTRODUCTION

005 is an electronics game that makes extensive use of digital integrated circuitry and television monitor concepts. This manual is intended for the use of the maintenance technician who possesses a general working knowledge of solid state circuitry, microprocessor and digital integrated circuitry, and video monitor concepts. Any individual NOT knowledgeable in these areas SHOULD NOT attempt repair of the electronic portions of the game, referring rather, to a competent technician.

SEGA/Gremlin's G-80 system will make troubleshooting easy. Each board has a separate function and most problems can immediately be isolated to a single board. The individual boards contain less circuitry than if they were combined on one or two boards. This results in faster and easier servicing. The new G-80 card cage system provides for a self-test feature (located on the CPU board) in addition to giving SEGA/Gremlin more flexibility in designing new games compatible with the revolutionary CONVERT-A-GAME™. Increased ROM capability and the addition of a quality synthesis (in some games) means that new SEGA/Gremlin games will be more exciting and certainly more profitable. Comments or questions about our games are welcome, and should be directed to:

Technical Editor
SEGA/Gremlin
16250 Technology Drive
San Diego, California 92127
TLX 910-355-1621
(714) 485-0910

Game Set-Up and Inspection

1. Inspection

a) Before plugging in your new game, inspect it closely to spot any possible shipping damage. Check to ensure the graphics are in place, the monitor is not damaged and that the overall cabinet is in good condition.

b) Open the coin mechanism door and inspect the inside of the game electronics compartment. Be sure no components or connectors have come loose. Proper connector fittings must be checked before game power is applied. Check all related connectors for good contact. Although disconnected connectors are easily spotted, poor contacts are difficult to locate. The connectors should therefore be pushed in firmly and then loosened to spot poor connections.

c) Are the fuses intact? There are five fuses (not counting the monitor fuses which are detailed in the monitor manual for this game). One fuse is located on the AC junction box. The other four are on the power supply PC board.

2 Voltage Selection

a) Before plugging in your game, make sure that the game voltage is correct for your location. Locate the two leads from the AC junction box to the power transformer. For 110 VAC, they should be connected to terminals 1 and 3 on the power transformer. For 100 VAC, connect 1 and 2, and for 220 VAC applications, they should be connected to 1 and 4.

You will also notice on the AC junction box that there is a safety interlock switch. When the front panel is in place the switch is depressed and the game receives power. Removing the front panel, the switch returns to its original position and the power is cut off from the game. For servicing, this switch can be pulled out and power will be restored.

3. Game Specifications

Power	100 VAC, 60 HZ (nominal), 150 watts max
	110 VAC, 60 HZ (nominal), 150 watts max
	220 VAC, 60 HZ (nominal), 150 watts max
Dimensions	25 1/2 inches wide x 30 1/4 inches depth (64.8 cm wide x 76.8 cm depth)
	72 1/2 inches height (184.2 cm height)

4. Important Notes

a) The following notes are included in compliance with FCC rules:

WARNING: This equipment generates, uses, and can radiate radio frequency energy and if not installed and used in accordance with the instruction manual, may cause interference to radio communications. As temporarily permitted by regulations, it has not been tested for compliance with the limits for Class A computing devices purseant to Subpart J of Part 15 FCC Rules, which are designed to provide reasonable protection against interference in which case the user at his own expense will be required to take whatever measures may be required to correct the interference.

b) Miscellaneous

Never remove circuit board connections while power is on.

Never replace any components with anything other than exact replacement parts.

DO NOT replace fuses with anything other than the proper value. A blown fuse indicates an overload condition within the game. Replacing the fuse with a higher value can cause severe damage to internal components, if an overload occurs.

5. Control Panel Removal

With the door to the game electronics compartment open, reach under the control panel and flip the fasteners on both sides of the control panel. The panel will now swing outwards. Disconnect the control panel harness, slide the spring-loaded pins on both sides and remove the control panel.

6. Front Plexiglass, Interior Graphics and Graphics Frame Removal

The front plexiglass, which secures the interior graphics, is held in place by the control panel. Release the fasteners on the control panel and swing it down. Directly under the front plexiglass, you will notice the graphics frame piece. Grab it in the middle, and pull it from the game. The front plexiglass can now be easily removed by lifting it on the bottom slightly and pulling it outward. The interior graphics are now free to remove. You will also see the graphics frame, which must be removed when taking out the monitor. Simply grip two sides and carefully lift out.

7. Card Cage Removal

If it is necessary to remove the card cage for servicing, first pull all the connectors. Then remove the three mounting screws located on the front bracket. The card cage can now be slipped out from under the rear bracket and removed from the game.

8. Logo Panel Removal

Remove the front plexiglass, interior graphics and graphics frame as explained above. Logo panel removal is accomplished in one of two ways. Underneath the logo panel, the presence of four mounting screws will dictate the removal of those screws, allowing the speaker board to swing, freeing the logo panel for removal. In the absence of the mounting screws, you will notice a sliding latch, underneath the logo panel and on either side of the speaker. Using a small flat-head screwdriver, slide those latches inward to release the speaker swing panel. Push up on the back portion of this panel, and the logo can now be removed.

9. Monitor Removal

To remove the monitor for servicing or replacement, first open the back panel on the cabinet and disconnect the leads to the monitor. Then, remove the front bezel, interior graphics and spacer frame as explained earlier. Underneath the monitor in the game electronics compartment are four bolts securing the monitor in place. Remove these, pull the monitor on either side and slide it out carefully.

005 GAME CONCEPT

Agent 005's mission: evade enemy guards, negotiate warehouses and skating rinks to deliver attache cases to a waiting helicopter, which in turn must engage in an aerial battle with parachute bombs, balloon bombs and an enemy helicopter. Game play begins as 005 parachutes into the scene and picks up an attache case. To make a run for the helicopter straightaway is difficult and accumulates fewer points. His alternative is to duck into either a warehouse or skating rink.

Armed with a stun gun to ward off pursuing guards, 005 can select a building with either 1, 2 or no stun gun cannisters at the entrance. Gas cannisters extend the stun gun's range and add more points. Fallen guards can be passed by other guards, but not by 005. Once inside the building, the scene changes to the interior of that building. In the skating rink, 005 must travel the rink's perimeter, luring the guards onto the ice to stun or evade them. Caution must be exercised here, as 005 can change direction, but cannot stop until he hits the edge of the rink. A successful rendezvous with the helicopter completes that delivery and shifts the scene back to 005 parachuting in to pick up another brief case. Once having been in the skating rink, only warehouses are there to enter, and conversely, if a warehouse was first entered, only skating rinks are available. In later rounds however, both skating rinks and warehouses are displayed. In the warehouse, 005 moves cautiously in the dark, but is pursued once caught in the beam of a guard's flashlight. Again, a helicopter waits to pick up our hero as he makes his way out the far end.

Now in possession of two attache cases, 005 is pursued by an enemy helicopter. Avoiding hedges, shrubbery, descending helicopter bombs, and

ascending balloon bombs, points are scored as 005 shoots balloon bombs, shrubbery or the enemy helicopter. The game ends if 005 is caught, or his helicopter is shot down a total of three times (operator selectable).

Scoring

Attache delivered to helicopter	10,000
Guard knocked out	200
Entering a building with:	
No stun gas cannister	300
1 stun gas cannister	400
2 stun gas cannisters	500
Shooting down:	
Shrubbery	20
Balloon Bomb	200
Enemy helicopter (2,000 X no. of brief cases delivered)	5,000+

005 OPTION SWITCH SETTINGS

OPTION	SWITCH #1							
Game Type	1	2	3	4	5	6	7	8
Upright	X	X	X	X	X	O	X	X
Cocktail	X	X	X	X	X	C	X	X
No. of men per game								
6	X	X	X	X	X	X	O	O
5	X	X	X	X	X	X	C	O
4	X	X	X	X	X	X	O	C
3	X	X	X	X	X	X	C	C

X = Not Used

O = Open (Off)

C = Closed (On)

COIN/CREDIT OPTIONS	SWITCH #2							
Coin/Credit	1	2	3	4	5	6	7	8
4 coins/1 credit	C	C	C	C	C	C	C	C
3 coins/1 credit	C	C	C	O	C	C	C	O
2 coins/1 credit	C	C	O	C	C	C	O	C
1 coin/1 credit	C	C	O	O	C	C	O	O
1 coin/2 credits	C	O	C	C	C	O	C	C
1 coin/3 credits	C	O	C	O	C	O	C	O
1 coin/4 credits	C	O	O	C	C	O	O	C
1 coin/5 credits	C	O	O	O	C	O	O	O
1 coin/6 credits	O	C	C	C	O	C	C	C
2 coins/1 credit 4 coins/2 credits 5 coins/3 credits	O	C	C	O	O	C	C	O
2 coins/1 credit 4 coins/3 credits	O	C	O	C	O	C	O	C
1 coin/1 credit 2 coins/2 credits 3 coins/3 credits 4 coins/4 credits 5 coins/6 credits	O	C	O	O	O	C	O	O
1 coin/1 credit 2 coins/2 credits 3 coins/3 credits 4 coins/5 credits	O	O	C	C	O	O	C	C
1 coin/1 credit 2 coins/3 credits	O	O	C	O	O	O	C	O
1 coin/2 credits 2 coins/4 credits 3 coins/6 credits 4 coins/8 credits 5 coins/11 credits	O	O	O	C	O	O	O	C
1 coin/2 credits 2 coins/4 credits 3 coins/6 credits 4 coins/9 credits	O	O	O	O	O	O	O	O

X = Not Used O = Open (Off) C = Closed (On)

G-80 BLOCK DIAGRAM

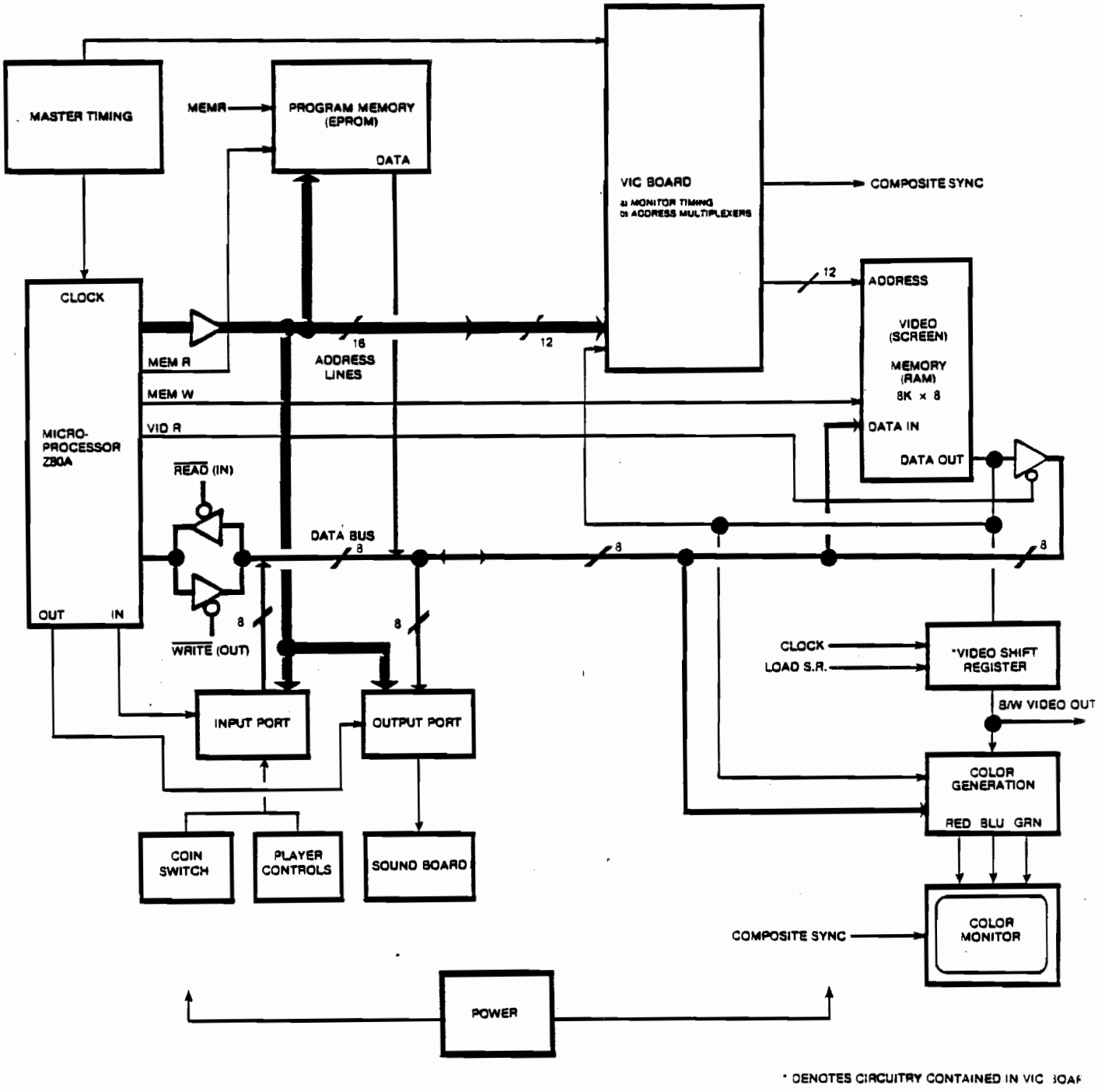

1. G-80 Boards

The G-80 system consists of several boards that plug into a mother board in a card cage system. This system simplifies repairs and cuts down on interference from outside communications systems. The mother board is crosswired to allow for the boards to be plugged-in in any order. Listed below are the bus pin assignments on the mother board:

1	Ground	A	Ground
2	A15	B	A7
3	A14	C	A6
4	A13	D	A5
5	A12	E	A4
6	A11	F	A3
7	A10	H	A2
8	A9	J	A1
9	A8	K	A0
10	D7	L	D3
11	D6	M	D2
12	D5	N	D1
13	D4	P	D0
14	WAIT	R	RESET
15	INT	S	EDGINT
16	NMI	T	EXT
17	EXT SEL	U	OUT
18	MEMR	V	MEMW
19	INPUT	W	OUTPUT
20	RFSH	X	MREQ
21	INTACK	Y	AC
22	+5V	Z	+5V
23	+5V	a	+5V

24	-5V	b	-5V
25	+12V	c	+12V
26	-12V	d	-12V
27		e	
28	HALT	f	MI
29	/2	h	*
30	*	j	*
31	SRC	k	*
32		l	
33		m	
34		n	
35		p	
36		r	
37		s	
38		t	
39		u	
40		v	
41		w	
42		x	
43		y	
44	Ground	z	Ground

*For Development Purposes Only

a) CPU Board

The CPU board is completely timed with the video board. But, for testing purposes it contains its own clock circuit, powered by an 8.000 MHZ crystal. Pin 17 is the external clock select and is grounded when the video board is plugged-in. When the external clock pulse comes in through pin T, it goes directly to the CPU and the entire CPU clock circuit is disabled. The WAIT signal, entering in at pin 14 is used to synchronize slower memory accessed by the CPU.

The NMI circuit, entering in at pin 16, contains a switch for activating the built-in-self-test. The self-test system will be explained more fully later.

When the edge interrupt circuit, entering at pin S, goes LO, it triggers an interrupt in the CPU. The CPU stops whatever it is working on, completes the activity required by the interrupt, and then returns to the function it was performing prior to the interrupt. It is a negatively triggered interrupt, which can be disabled by the CPU at any time.

The AC signal, entering in at pin Y, combines with RESET at pin R and the input from the reset switch located on the operator panel to reset the CPU. Disregard PANEL RESET at pin 30. This circuit is used only for system development.

The CPU is a Z80A. A Z80A must always be used as the Z80 is not fast enough to run the G-80 system. U21 is an address bus controller. Eight of the sixteen address lines pass through U21 before addressing the RAMs and Eprom at U25. U25 contains the data for the self-test and contains features common to all games, such as coin acceptance, credit/coin handling, power-up sequence, player 1 or 2 recognition and CPU initialization. U3 is an output port for the CPU and U4 is an input port. Connector P1, pins 24 through 40, shown on sheet 6 is not used. U15, located below U4 on the schematic, decodes memory select on the CPU board. Sheet 7 contains the coin inputs, player inputs and inputs from the operator panel. The coin circuitry contains ICs U6, U39 and U16. U9 is the input port for the coin switches and service switch. Player inputs enter through connector P1, pin 15 through 22.

b) SOUND BOARDS

A G-80 Sound Board contains the circuits needed to generate all game sounds other than the speech. The Sound Board Circuits are triggered through 8-bit latches, which are connected to the data bus.

The appropriate 8-bit code on the data bus is then latched to activate the corresponding sound circuit. All Sound Board signals are mixed by an IC op-amp, the output of which is amplified by the power amplifier. In games containing a Speech Board, the Sound Board output is mixed with the speech output on the Speech Board. The result of the mixed signals is then amplified by the power amplifier to drive the speaker.

c) VIDEO BOARD

The video board contains a 15.468 MHZ crystal that generates the timing signals for video generation. Because the video board contains twice as many RAMs, it has more extensive graphics capability. Color capability is greatly expanded because of a color RAM, U9, which allows the program to create a wider variety of color schemes. There are 8 shades of red, 8 shades of green and 4 shades of blue. The video board also contains circuitry (U34, U35, U36, U38, U49 and U50) to make the picture "flip" for cocktail table models.

On the G-80 Video I Board is located the VIC Replacement Board. This board is, in part, the equivalent circuit of the VIC chip. It is a simple circuit consisting of a number of counters and multiplexers for generating video timing and addressing video RAM.

d) EPROM Board

The EPROM board contains a relatively simple memory system. It can hold up to 23 2716 EPROMs totalling 46K bytes of memory. U24 and U30 decode all the EPROMs; U25 is the buffer IC to the data bus. In operation, any one of the 23 EPROMs is selected by 5 CPU address lines.

e) POWER SUPPLY

The G-80 power supply incorporates all of the voltages and audio power amplification necessary to power any G-80 based video game. The major

differences between this and other Gremlin power supplies is that the transformer (560-0055) is mounted separately from the PCB/heatsink/chassis combination. This transformer is noticeably larger than previous units, mainly because it has isolation windings for driving X-Y color monitor as well as windings for a raster scan color monitor. There are multiple primary taps available for using 100, 115, or 230 VAC as the input voltage.

Table 1 lists the ratings of the regulated DC voltages (a standard test load) as well as the ratings of the transformer's windings used to drive the X-Y or raster scan monitor.

TABLE 1

Regulated DC Voltages

+5V @ 6A

-5V @ 1A

+12V @ 1A

-12V @ 1A

AC (monitor) Voltages

X-Y: 92 VCT (voltage center tap) @ 2A

Raster: 100 or 115 VAC @ 0.65A

Voltage Regulator Circuit Description

The +5 volt supply mainly consists of U1 and the TIP141. U1 is a 723 voltage regulator IC which contains a voltage reference, error amplifier, series pass darlington transistor pair and a current limit transistor. Potentiometer R31 (+5V ADJ) divides the 7.15 (NOM) reference to 5.0 volts as the input to pin 5, the noninverting input of the 723's error amp. Pin 4, the inverting input, senses the output voltage. The internal error amp maintains a voltage at U1 pin 10 which is higher than the 5.0V output by an equal amount to the two VBE drops of the TIP141 (a high current

darlington) which acts as a current amplifier, and IR drop across R25. Any change in the output voltage is sensed at pin 4 which causes the error amp to drive pin 10 higher or lower in order to keep the output at a steady 5.0V.

A "foldback" current limiter circuit is composed of R25, R26, R32, Q7 and the internal current limit transistor of U1.. This circuit allows the regulator to operate normally until the load current increases to the point where the voltage across the R32 reaches the value which starts turning on the internal current limit transistor. This transistor reduces the output current of the regulator to a fraction of the "knee" current when the output is shorted to ground. This feature greatly reduces the power dissipated in the TIP141 when the output is accidently short circuited.

Capacitors C20 and C21 frequently compensate the regulator so it won't oscillate and C17 filters high frequencies at the output. Q7 temperature compensates the current limit circuit. Temperature variations of its emitter-base voltage closely match and cancel the base emitter voltage of the internal current limit transistor, the knee current of this regulator would now remain constant over wide temperature variations.

Audio Amplifier Circuit Description

The G-80 power supply has provisions for two power amplifiers. Only one is used at present and the foreseeable future. The input signal from the volume control is coupled to differencial pair Q2 and Q3 via C5. Resistor R5 sets the input impedence 22K ohms. Resistor R6 sets a current of approximately 2 ma for Q2 and Q3 to divide equally. The voltage gain of Q2 is determined by its emitter current, R7, and the impedence looking into Q1, the second stage of voltage gain. Resistor R8 provides local negative feedback in the emitter of Q1 for increased

open loop linearity while C9 and Q1's voltage gain provide a dominate pole open loop roll-off to ensure stability of the amplifier. Diodes D4 and D5 provide a small amount of turn on bias for the TIP120 and TIP125 darlington current amplifiers. Resistor R22 is bootstrapped by C10 to make R22 look like a current source. This technique allows maximum negative voltage swing for a symetrical output waveform at full power. Local feedback in the output stage is provided by R14 and R15. The overall voltage gain of the amplifier is set by the ratio of R9 and R10. The actual value is:

$$\frac{R9}{R10} + 1 = \frac{22K}{1K} + 1 + 23 \text{ or } 27db$$

Capacitor C7 adds additional high frequency compensation and the C8-R10 combination determines the low frequency roll-off point of -3db at 16Hz. The C11-R17 combination provides feedback loop stability in the event that a speacker is not connected. The maximum output is approximately 25 watts into 4 ohms and 15 watts into 8 ohms.

Adjustments

1. Adjust R31 for 5.0V at the load. This compensates for wiring losses.
2. There are no other adjustments. The tolerances are as follows:

$$-5V \pm 0.2V$$

$$+12V \pm 0.5V$$

$$-12V \pm 0.5V$$

1. Self - Test

This is a basic self-test sequence for any G-80 game.

Basic diagnostic test sequence:

a) CPU RAM

b) Maskable interrupts

c) First 1K of game ROM's

d) Video RAM and Hardware multiplier

e) Player start buttons

f) Display screen (visual)

g) All game ROM's

h) System input

i) Game controls

j) Sounds/Voice

Individualized diagnostics descriptions and procedures:

a) CPU RAM test - Test all the RAM's on the CPU card before proceeding, the system needs to use this RAM for stack and variables during other tests so if any locations are bad the processor will halt (halt light on).

b) Maskable interrupts test - Video interrupt is enabled through the output port bit and all maskable interrupts are enabled inside the processor, the CPU then executes several HALT instructions to insure that at least one edge-triggered interrupt has occured. If no interrupts occur during the test the halt light will remain on constant which is the same result as a bad CPU RAM. This ambiguity can be eliminated by checking the vertical interrupt another way. The system reset/power-up logic will also halt if the video interrupt is not functioning.To try this, press the "Reset" switch.

c) First 1K of game ROM's test - The first 1K of the first game ROM will be checked for validity. If this portion of the first ROM is bad the system will not be able to proceed because important information defining parameters of the game are stored in this first 1K. If an error occurs during this validity check the CPU. It will hand up and repeatedly flash the halt light.

d) Video RAM and Hardware multiplier test - The video RAM is tested first in the event that it tests good then the hardware multiplier is checked. If the video RAM is good the message "All Video Ram Good" appears. If a bad video RAM chip is found then the message "Bad Video RAM chip U" appears on the screen along with the chip U number (U#). Due to the fact that somtimes a bad video chip causes the display to be useless, the system also flashes out the bad chips "U#" on the halt light, over and over again seperating the "U#" with a one second on-pulse. The hardware multiplier is used in the game to multiply two 8-bit numbers together to form one 16-bit product. This test performes a select group of multiplications, over 2000 in actuality, design to thoroughly exercise the process of multiplication between the software and the hardware multiplier. The message "Good" or "Bad" are the only indications of functionality with respect to this test.

e) Player start button test - One of the "two game start" push buttons on the front of the cabinet is very special. The "one player start" button was designed by the system as a way to terminate the test that is currently being run. The reason that these two buttons were tested relatively early in the sequence was so that the remaining tests could use one of them for a termination signal.

To be sure that these two buttons are functioning properly, check it when it is untouched, the status indicated is "O" (for open switch contact) and that when pushed or depressed momentarily the indicated status is "C" (for closed switch contact) during the time the button is down. This notation for switches being in the "Open" or "Closed" state, "O" or "C" will be used throughout the diagnostic sequence whenever the status of a switch is being displayed on the screen.

f) Screen Test - This test is supplied by the game logic, external to the "CPU ROM", to provide a visual indication of how well the display screen is functioning. Depending on how the game hardware is set up, XY or Raster, or what software version of the game you have, the appearance of this test display may change. Usually there will be some sort of pattern to test beam deflection and colors to check that all electron guns are functioning.

g) All game ROM's test - The intent of this test was to insure the integrity of all of the data in all of the game ROM's. When the ROM's for a game were originally generated there was an logrithm performed on each 1K block of data. Each of these calculations, a form of CRC (cyclic redundency check similar to a check sum), produces a 16-bit word. These words are stored, along with a Gremlin part number, in the first ROM. When this test is run all of these 16-bit CRC words are re-generated and are compared to the known values stored in the table in the first ROM. If one of these newly calculated values does not match its corresponding stored value then the system kicks out an error which amounts to the message "Bad ROMs" followed by one or more bad part numbers of that ROM that was found in mis-match. If all ROM's are good the system quickly proceeds on the next test.

h) System inputs test - These inputs are refered to as "System inputs" simply because they control system functions, such as credit accumulation, coinage options, game configuration, etc. The diagnostic user may check to see that the coin switchs, service switch, and option "DIP" switches are functioning properly. The "Open" and "Closed" switch notation applies here as described earlier.

i) Game controls test - The names of the controls that the game player would use to control the action on the screen is what this test was designed to check. Make sure that when hands are off of the controls all of the switches are "Open". When a particular control is twisted, pushed, turned, or whatever, watch to see that the status of that control, and only that particular control, changes to reflect the action on the control panel.

j) Sounds/Voice test - The final phase displays each type of sound on the screen accompanied by the actual audio sound. The final sequence is Voice. The test runs through the entire vocabulary of the game.

2. Troubleshooting

The previous section described the basic sequence of the G-80 self-test system. This section details how to use the self-test in troubleshooting the G-80 card cage.

As in any troubleshooting procedure, we first want to eliminate as many possibilities as we can. So, for the purpose of this discussion, we'll assume that the power supply and monitor have already been checked and perform properly. (For monitor problems, check the monitor manual for your game. Power supply troubleshooting will follow this descussion.) Now, we can isolate the problem further by checking each of the G-80 boards. Let's look at a typical check-out procedure for the boards.

a) CPU BOARD

Before we start our procedure for the CPU board, we can eliminate two possible boards right away. These are the Sound and Speech boards. By removing these boards first, we'll find out two things immediately. 1) The Speech and Sound Baords are probably good, if the original problem remains. 2) That either the Speech or Sound Board, or both, are defective, if the original problem clears up.

Doing this isolates the problem still further to just three boards. That's a better place to start. Now, we can plug the CPU Board into the extender board and insert it into any slot on the mother board. This enables you to place any other board in the top slot for easier access.

Now activate the G-80 self-test. Observe the red LED on the CPU Board. If it lights and remains lit, this tells us that one of the CPU scratch pad RAMs, U26-U29, is probably bad.

To find which one, replace them, one at a time and run the self-test again each time. If the LED lights and flashes, this indicates a problem somewhere on the CPU Board. Now we have to isolate further. Begin by using an oscilloscope to check the following levels:

1) RESET pin 26 of the Z80A should be high, or about 5 volts. If it is low, the Z80A will lock up--trace the signal back to U30, pin 13, U23, pins 1 and 2, and the rest of the reset circuit, U12, Q5 and Q6.

2) Next, look at the C LOCK INPUT, pin 6 of the Z80A. On this pin there must be a 4 MHZ clock signal that swings between 0 and 5 volts. If it is anything else, check the clock circuit on the video board, and follow it to the CPU Board through U19 and U18.

3) Then, check for a high level on pins 24, 17 and 16 on the Z80A. These are the WAIT, NMI and INT signals, respectively. If any are low, trace the cause of this through the signal's respective circuit.

4) Next, look at the outputs of U34, a 74LS244. These are pins 3, 5, 7, 9, etc., and if any are floating, suspect U34 as being defective.

5) Then, verify that the input signals on U36 and U38 are present on the outputs of the chips. If any outputs are missing or floating, suspect U36 or U38.

6) If the orginal problem was that the game would not coin-up, check U6, pins 8 and 11, U39, pin 9, U16, pin 12 and U7, pin 12 for level changes when the coin switch is activated. Also, verify that the coin counter advances when the switch is triggered on connector P1, pins 1 and 3. If any or all player control switches do not operate the game, suspect U5.

These tests can be made quickly by running the self-test again and observing the input port display. When a player or control switch is activated, the display will change from "O" (open) to "C" (closed), indicating a closed switch contact.

Up to this point, we've run a series of tests to check-out the CPU Board. If the results prove good, our problem is more than likely in either the Video or EPROM Board. Let's proceed to the Video Board first.

b) VIDEO BOARD

First, run the self-test again to see if it reveals a bad video RAM. The display indicates which RAM is defective. Replace it and re-start the test. The memory should now be OK. If the test shows another bad RAM, replace that RAM. If the test still indicates another bad RAM, U33, a 74S283, could be defective. Replace it, and run the test again. The memory should now pass. Verify that the color RAM, U9, is OK by observing the color pattern at the end of the self-test. If any colors are missing or the display is incorrect, suspect U9, U11, U7 or U8.

On some G-80 Video Boards, you'll see the VIC replacement board. As was mentioned earlier, this board is, in part, the equivalent circuit of the VIC chip. It is a simple circuit consisting of a number of counters and multiplexers for generating video timing and for addressing video RAM. When troubleshooting a video board with the VIC Boards, be careful that the pins on the board do not bend and that they make good contact with their socket. The 40-pin socket may need to be replaced if no other problem is found on either the VIC or Video Board.

To troubleshoot a Video Board with either a VIC chip or board, verify first that all address lines to the VIC socket have active signals present on pins 12, 13, 14, 23 and 29. All these signals

must be rapid clock pulses. Follow the outputs of the VIC chip or board through U39, U40 and U38 to the address lines on the RAMs. Again, these lines must be pulsing high and low.

Sometimes, the RAM self-test does not reveal a bad RAM, even though the picture is still incorrect. To locate the defective RAM, ground pin 14 of each RAM, the output pin, and observe the display. When you ground the defective RAM's output, the picture will break up even more in that part of the display that was originally distorted. This usually indicates that this RAM is bad. Replace it and re-run the self-test.

Suspect the VIC chip or board if the game has a vertical or horizontal sync problem-- for example, if the picture rolls and adjusting the monitor does not affect the display. Finally, it is improtant that the following ICs on the video board are of the "74S" series, not "74LS". The ICs are U38-74S283, U42 and U43-74S175, U45-74S74, U53-74S163 and U60-74S04. Now, let's discuss the EPROM Board and see how we can isolate a problem on it.

c) EPROM BOARD

As before, run the self-test to see if it indicates a bad EPROM. If it does, replace the chip and re-run the test. If all EPROMs show good, begin checking the address lines to be sure none are pulled high, low or are floating. Check for a possible short on the data lines, and make sure no EPROM pins are bent or are making poor contact with the socket.

Finally, check for the active signals on the inputs to U30 and U24. These two chips select and enable each EPROM. Then, verify that the signal labelled BUFFER on pins 1 and 19 of U25, is active low.

■ NUMBER INSIDE BOX INDICATES RECOMMENDED SPARE PARTS TO SUPPORT 6 GAMES

TOP ASSY GAME 005 DRAWING NUMBER 700-0081

ITEM	QTY. REQ'D	PART NO.	DESCRIPTION
1	1	130-0002	Speaker Cover 6 X 9
2	1	130-0020	Speaker Game 6 X 9 10W
3			
4	1	140-0021	Cover J-Box
5	1	140-0055	Cabinet Univ UPR
6			
7	2	220-0167	Lock, Coin Mech Door
8	2	220-0178	Draw Catch
9	2	220-0194 220-0195	Coin Mech W/Lamp
10			
11	1	250-0038	Molding Strip
12	1	250-0048	Clip Switch
13	1	250-0458	Saddle G-80 Cage
14	1	250-0481	Plate Strike
15	1	250-0492	Molding Logo Panel
16	2	250-0497	Clamp Component BD
17			
18	2	253-0222	Coin Receptacle
19	1	253-0228	Monitor Panel Clear
20	1	253-0253	Panel Logo (005)
21			
22	1	260-0001	Fan Axial Cooling
23			
24	30	280-0005	Cable Tie
25	2	280-0324	Cable Clamp Nylon

TOP ASSY GAME 005 DRAWING NUMBER 700-0081

ITEM	QTY. REQ'D	PART NO.	DESCRIPTION
26	8	280-0327	Base Tie Wrap
27	11	280-0345	Tie Wrap Screw Mnt
28	2	280-0359	Elect Crimp Sleeve
29	2	280-0360	Washer Lock, Lock
30			
31	4	281-0014-28	SCR Oval HD Phil 8-32 X 1.750 Black
32	4	281-0042-32	SCR PN HD Phil S/M Type A/AB 6-18 X 2.00 LG
33	2	281-0044-08	SCR PN HD Phil S/M Type A/AB 8-15 X .500 LG
34	27	281-0045-12	SCR PN HD Phil S/M Type A/AB 10-12 X .750 LG
35	4	281-0052-08	SCR 82 Degrees Flat HD PHL S/M Type A/AB 6-18 X .500 LG
36	11	281-0074-12	SCR Wood 82 Degrees Flat HD Phil 8-15 X .750 LG
37			
38	11	282-0005-20	Bolt Carriage HD 10-24 X 1.250 LG
39	3	282-0005-24	Bolt Carriage HD 10-24 X 1.500 LG
40	2	282-0017-16	Bolt Hex HD 1/4-20 X 1.000 LG
41	4	282-0017-24	Bolt Hex HD 1/4-20 X 1.500 LG
42			
43	1	283-0015-00	Nut Wing Mach 10-24
44	4	283-0024-00	Nut Hex Mach 8-32
45	17	283-0025-00	Nut Hex Mach 10-24
46			
47	4	284-0002-00	Washer Flat Std O.D. STL #6

TOP ASSY GAME 005 DRAWING NUMBER 700-0081

ITEM	QTY. REQ'D	PART NO.	DESCRIPTION
48	4	284-0004-00	Washer Flat STD O.D. STL #8
49	12	284-0006-00	Washer Flat STD O.D. STL #10
50	22	284-0016-00	Washer Flat Small O.D. STL #10
51	6	284-0027-20	Washer Flat 1.250 O.D. STL ¼
52	6	284-0034-00	Washer Lock Split STL #8
53	45	284-0036-00	Washer Lock Split STL #10
54	6	284-0037-00	Washer Lock Split STL, ¼
55			
56	4	286-0044-12	SCR PN HD Phil S/M Type A/AB 8-15 X .750 LG Black
57			
58	1	390-0019	Lamp Fluorescent
59			
60	1	420-0030	Decal Caution 115V
61	1	420-0568	Decal FCC
62	1	420-0624	Light Baffle Univ CAB
63	1	420-0636	TAG Extra Value
64	1	420-0656	Decal Self Test Instr
65	1	420-0692	Manual 005
66	1	420-0693	Decal GM Instr 005
67	1	420-0694	Box Decal 005
68	1	420-0697	Graphic Interior 005
69	1	420-0708	Decal GM Instr Points 005
70	1	800-0145-00	Assy AC J-Box
71	1	800-0147	Assy. Fluor Lamp 2
72	1	800-0190	Assy XFMR EMI

TOP ASSY GAME 005 DRAWING NUMBER 700-0081

ITEM NO.	QTY. REC'D	PART NO.	DESCRIPTION
73	1	800-0191	Assy. GM PWR Supply G-80
74	1	800-0232	Assy. Harn Spkr. G-80
75	1	800-0232	Assy Harn GND Intf
76	1	800-0277	Assy. Vol Control Black
77	1	800-0280	Assy Coin Counter
78	1	800-0284	Assy. Harn GND Coin Mech Univ.
79	1	800-0285	Assy. Harn GND GM Elec.
80	1	800-0286	Assy. Harn GND Pwr Sply
81	1	800-0290	Assy. GND Strap Cont PNL
82	1	800-0314	Assy Harn Power
83	1	800-0315	Assy. Harn Coin Mech Lighting
84	1	800-0321	Assy Harn Coin Mech
85	1	800-0322	Assy. Fan Cord
86	1	800-0328	Assy Mon Univ Raster
87	1	800-0329	Assy. Harn Mon.
88	1	800-0330	Assy. Harn GND Mon Raster Univ
89	1	800-0333	Assy Conn Brkt
90	1	800-3213	Assy GM Elect
91	1	800-3221	Assy Control Panel

Top Assembly
700-0081

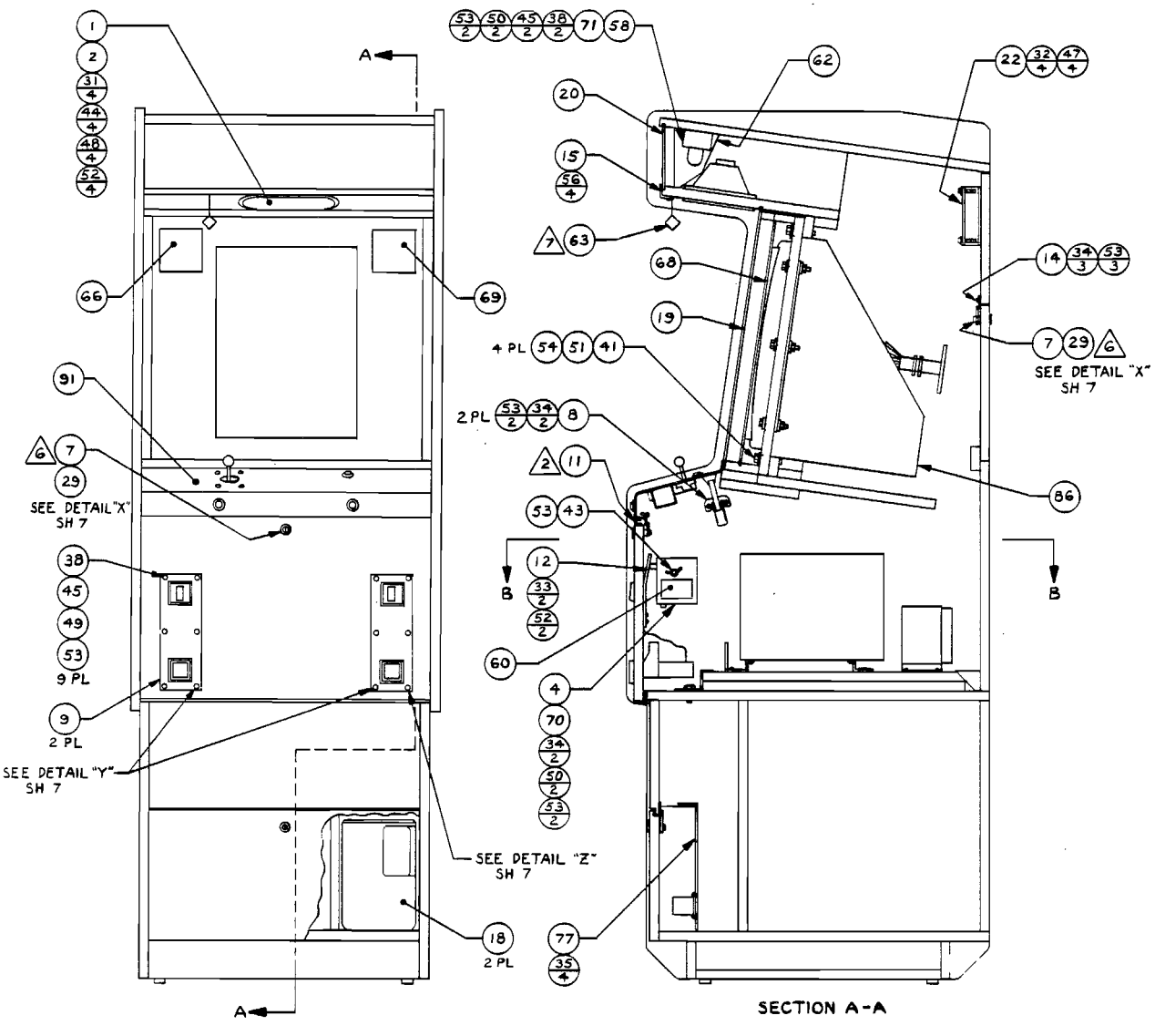

Top Assembly
700-0081

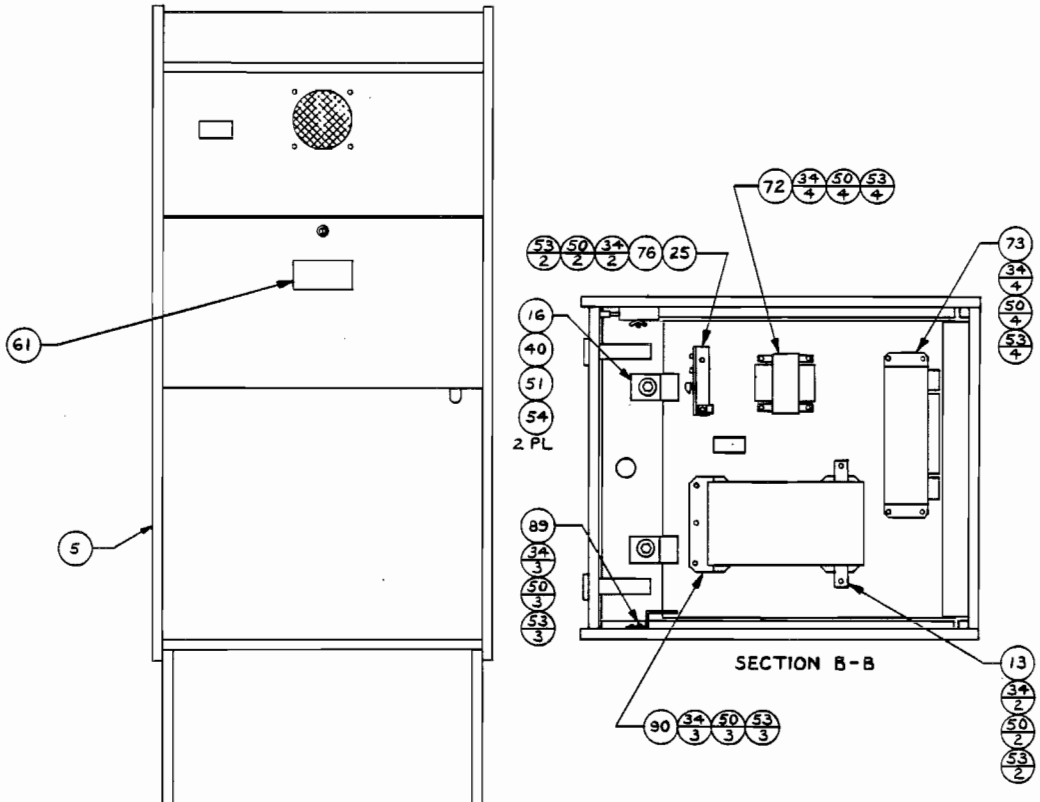

Top Assembly
700-0081

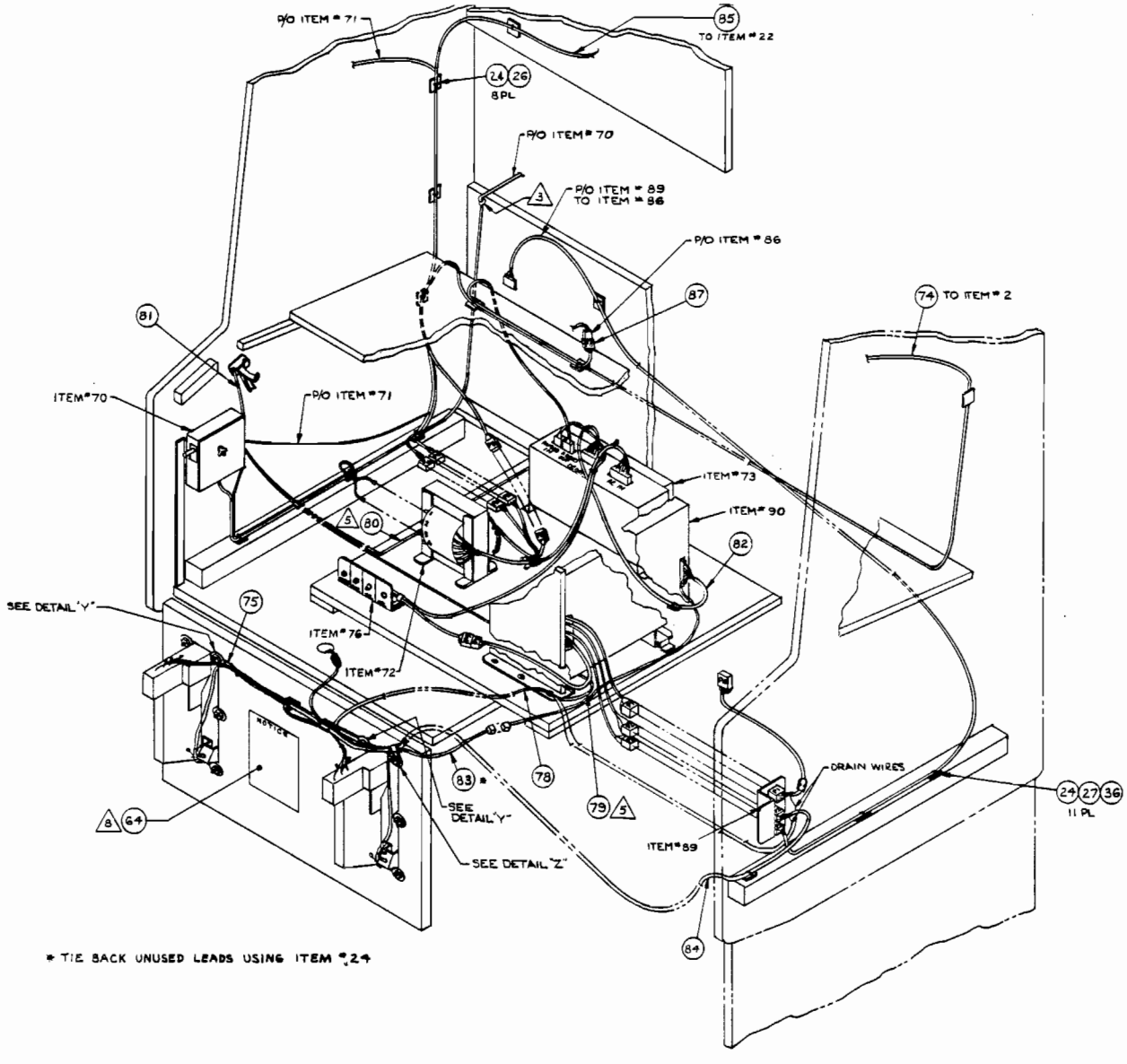

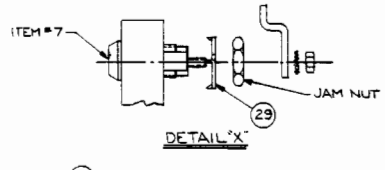

DETAIL 'X'

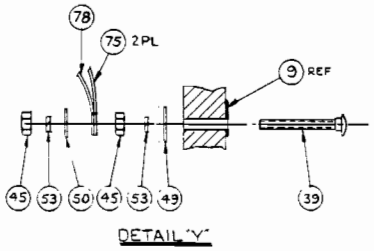

DETAIL 'Y'

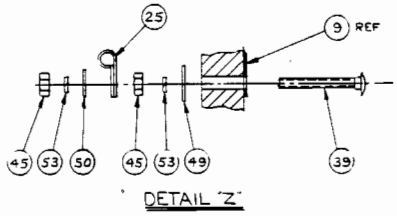

DETAIL 'Z'

ASSY CONTROL PANEL "005" DRAWING NUMBER 800-3221

ITEM	QTY. REQ'D	PART NO.	DESCRIPTION
2 1	1	510-0059	Joystick 4 way long shaft
2	4	282-0005-12	Bolt Carriage #10-24 X .75L
3	4	283-0025-00	Nut, Hex Mach #10-24
4	4	284-0036	Washer, Split Lock Steel #10
5	4	284-0016-00	Washer, Flat SM OP #10
6	3	280-0329	Nut, Hex Pal 1/2-13
6 7	3	240-0009	Button Plunger, Yellow
8	6	253-0031	Spacer, Switch
9	3	510-0023	Assy, Switch
10	1	253-0252	Graphic Control Panel
11	3	280-0005	Cable Tie
12	2	280-0327	Base Tie Wrap
13	1	250-0517	Subpanel Metal Weldment 005
14	1	800-3217	Assy, Harness Control Panel

Control Panel Assembly
800-3221

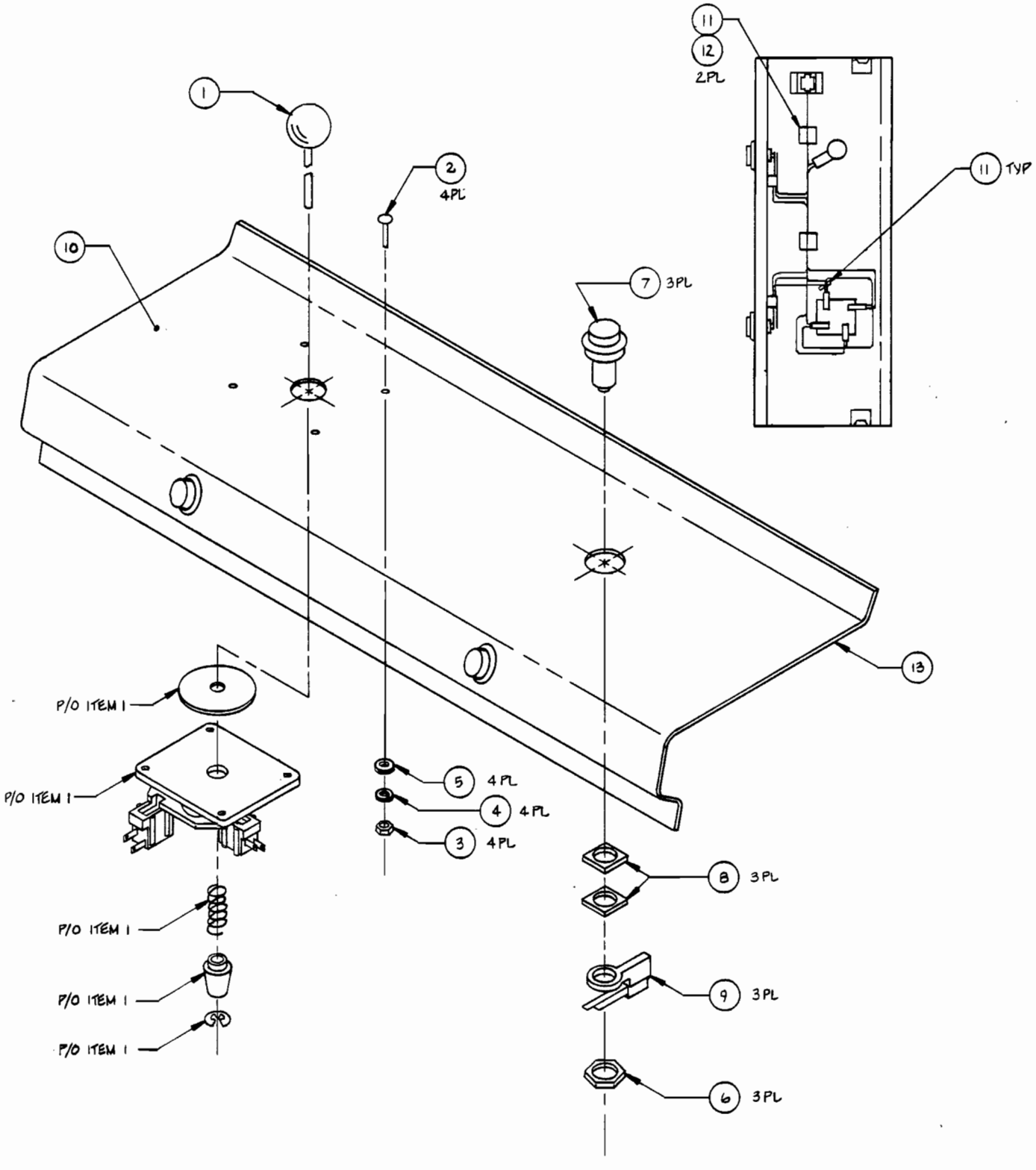

ASSY MONITOR COLOR 19" VERTICAL DRAWING NUMBER 800-0328

ITEM	QTY. REQ'D	PART NO.	DESCRIPTION
1	1	200-0022	Color Monitor 19" Vertical
2	2	280-0359	Elec. Crimp Sleeve
3	1	800-0159	Assy. Monitor Power Harness
4			
5	6	282-0017-24	Hex Head Bolt 1/4-20 X 1.500LG
6	12	284-0027-16	Flat Washer, Large O.D. Steel 1/4
7	6	283-0007-00	Nut-Hex, Self-Locking, Mach 10-24

Vertical 19" Color Monitor Assembly
800-0328

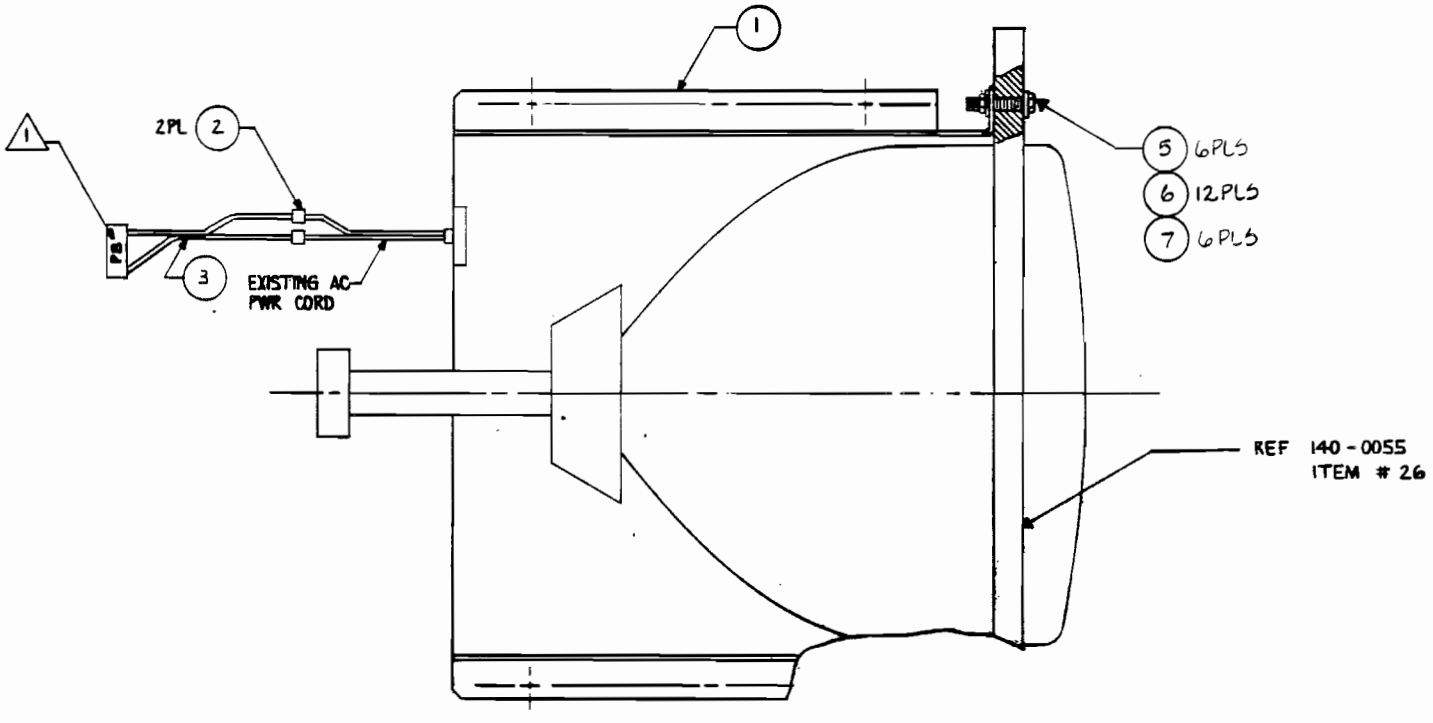

ASSY GAME ELECTRONICS 005 DRAWING NUMBER 800-3213

ITEM	QTY. REQ'D	PART NO.	DESCRIPTION
1 1	1	800-0216	Assy. Video 1 Board Mod
1 2	1	800-3219	Assy. CPU 005
1 3	1	834-0130	Assy. Sound PCB 005
1 4	1	800-3220	Assy. 2716 Prom Board
5	1	800-0302	Assy. Jumper Plug
6	1	800-0281	Assy. Harn Master Intf
7	1	800-0332	Assy. Harn, Video Inter.
8	1	800-0296	Assy. G80 CG Uni #2
9	1	420-0695	Decal Game Electronics 005

Game Electronics Assembly
800-3213

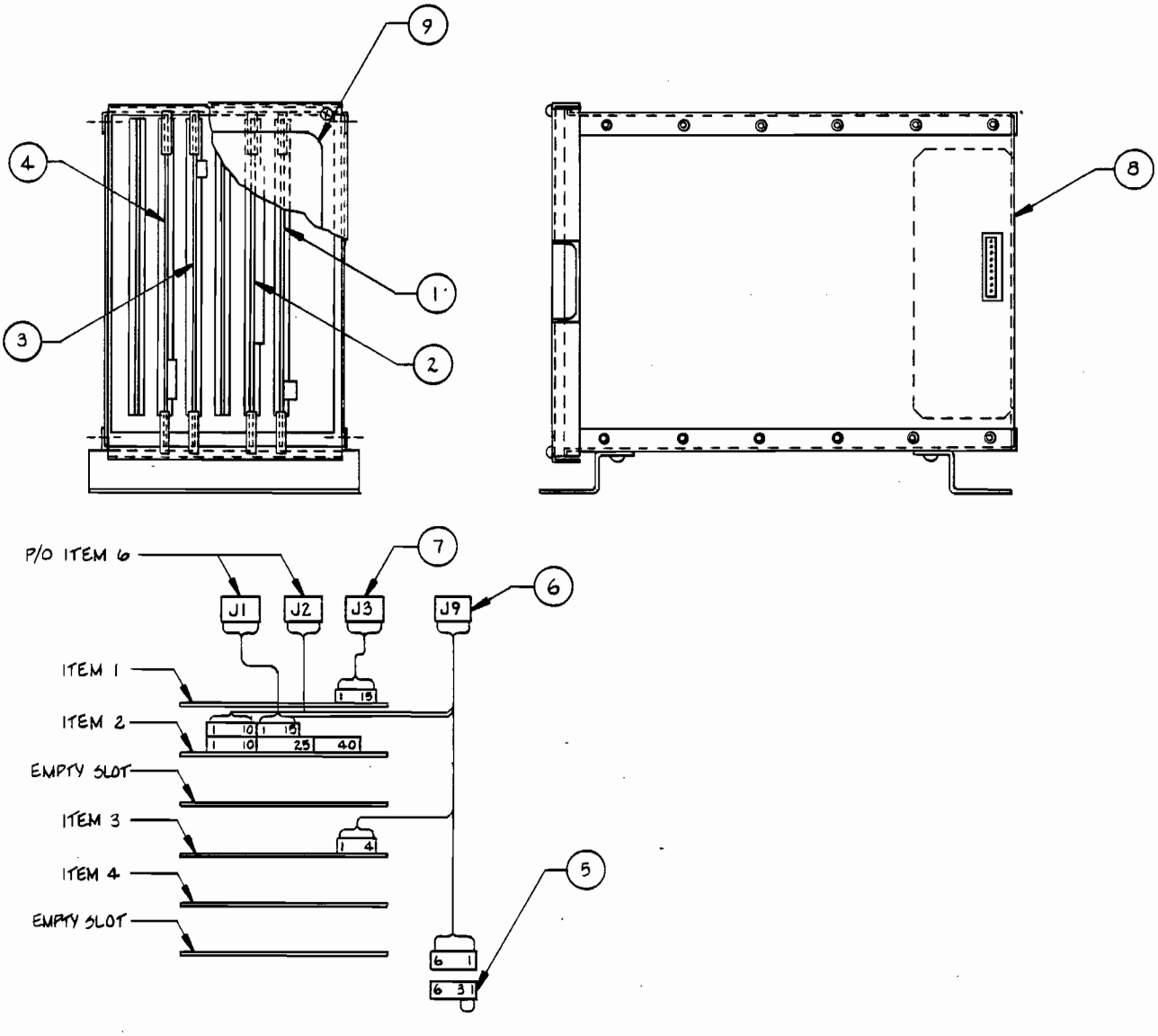

ASSY CPU BOARD

DRAWING NUMBER 800-0107

ITEM NO	PART NO	QTY PER ASSY	DESCRIPTION
1	150-0088	3	CAP E 10uf 25V
2	151-0005	1	CAP CER 680pf 50V
3	151-0012	1	CAP CER .1uf 50V
4	151-0020	1	CAP CER 33pf 50V
2 5	151-0060	21	CAP CER .1uf 16V AX
3 6	151-0061	36	CAP CER 220pf 16V AX
7	170-0194	1	PC BOARD
8	211-0008	4	CONN PIN TEST PT
9	212-0098	4	CONN M 10 PIN RTA
10	230-0013	1	XTAL 8.000 MHZ
2 11	314-0001	1	IC NE555
12	314-0015	1	IC 7404
1 13	314-0018	4	IC 74LS00
14	314-0019	1	IC 74LS04
1 15	314-0055	3	IC 74LS244
16	314-0058	1	IC 74LS08
1 17	314-0062	5	IC 74LS74
18	314-0066	1	IC 74LS27
19	314-0067	1	IC 74LS30
20	314-0068	2	IC 74LS32
21	314-0078	1	IC 74LS02
22	314-0083	1	IC 74LS240
23	314-0085	2	IC 74LS14
24	314-0087	1	IC 74LS139
25	314-0093	1	IC 74LS374
26	314-0099	1	IC 74LS245
1 27	314-0105	4	IC 74LS253
1 28	315-0041	1	IC Z80 A
29	315-0046	4	IC 2114
1 30	315-0070	1	IC 31570
31	316-1346	1	IC 1346
32	316-0746	1	IC PROM 32 x 8
33	390-0003	1	LED RED
34	471-0101	1	RES 100 OHM 1/2W 5%
35	471-0102	2	RES 1K OHM 1/2W 5%

ASSY CPU BOARD CON'T

36	471-0103	1	RES 10K OHM 1/2W 5%
37	471-0104	3	RES 100K OHM 1/2W 5%
38	471-0122	1	RES 1.2K OHM 1/2W 5%
39	471-0220	1	RES 22 OHM 1/2W 5%
40	471-0221	3	RES 220 OHM 1/2W 5%
[1] 41	471-0331	8	RES 330 OHM 1/2W 5%
42	477-0002	3	RES PACK 15 X 2.2K
43	481-0001	2	DIODE IN4002
[2] 44	481-0006	1	DIODE IN914/IN4148
45	482-0006	1	XSTR 2N4403
46	482-0010	2	XSTR PE 8050
[2] 47	482-0014	5	XSTR 2N4401
48	510-0052	1	SWITCH PIANO DIP
49	510-0053	1	SW PUSH BUTTON SIDE PCM
50	213-0001	1	SKT 24 PIN DUAL INLN
51	213-0002	4	SKT 18 PIN DUAL INLN
52	213-0004	1	SKT 16 PIN DUAL INLN
53	213-0005	2	SKT 40 PIN DUAL INLN
54	510-0049	1	SWITCH 8 POS DIP
55	471-0472	1	RES 4.7K OHM 1/2W 5%
56	280-0330	2	CARD EJECTOR
57	471-0473	1	RES 47K OHM 1/2W 5%
58	151-0031	1	CAP CER .22UF 16V

CPU Board Assembly
800-0107

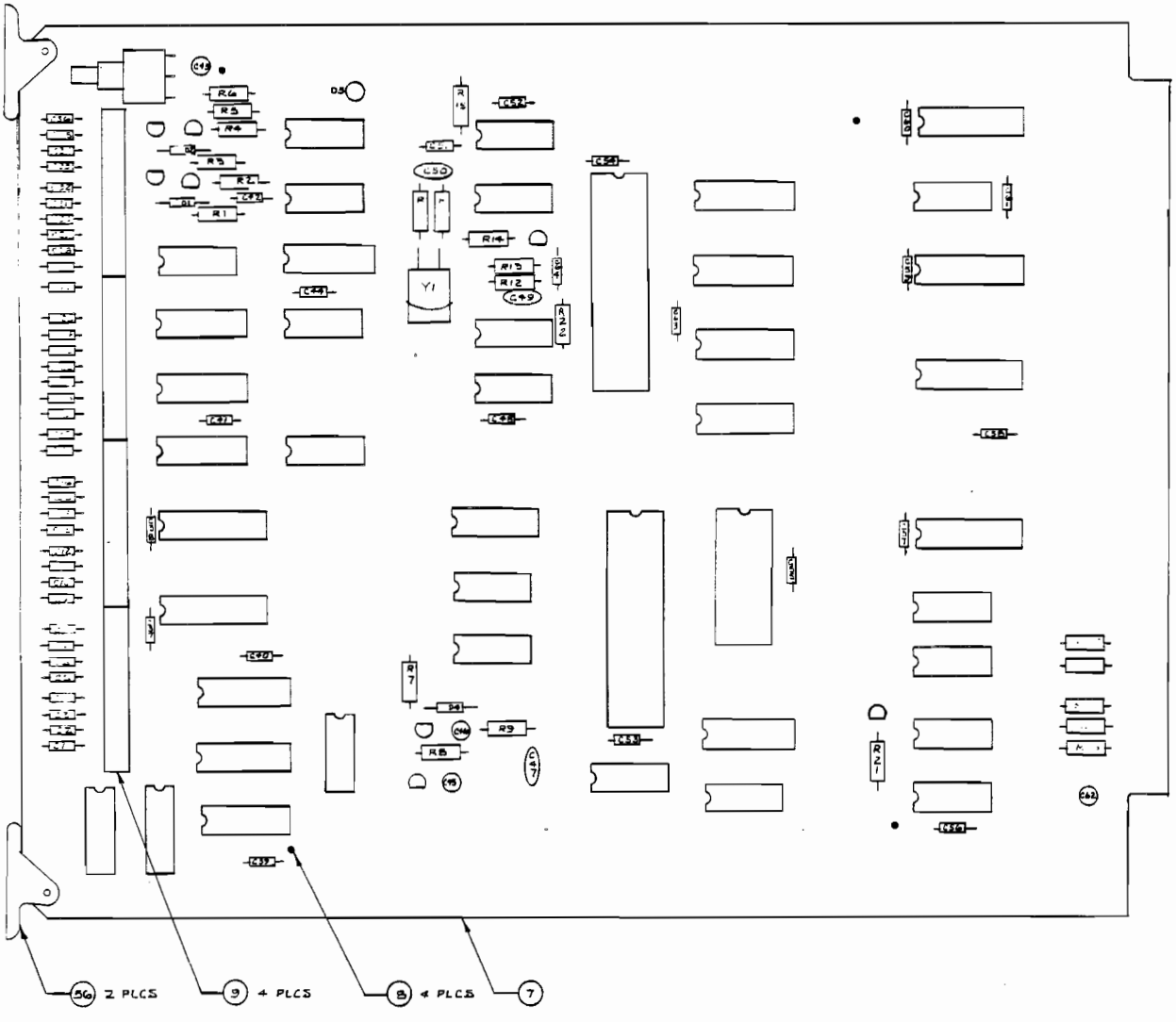

ASSY G-80 2716 PROM BOARD

DRAWING NUMBER: 800-0151

ITEM NO	PART NO	QTY PER ASSY	DESCRIPTION
2 1	151-0058	13	CAP CER .01uf 16V AX
3 2	151-0060	15	CAP CER .1uf 16V AX
3	170-0211	1	PC BOARD
4	213-0001	24	SKT 24 PIN DUAL INLN
5	314-0055	1	IC 74LS244
6	314-0058	3	IC 74LS08
7	314-0059	1	IC 74LS10
8	314-0104	1	IC 74LS138
9	314-0120	1	IC 74LS154
10	211-0008	3	CONN PIN TEST PT
11	150-0088	1	CAP E 10uf 25V
12	280-0330	2	CARD EJECTOR

2716 Prom Board Assembly
800-0151

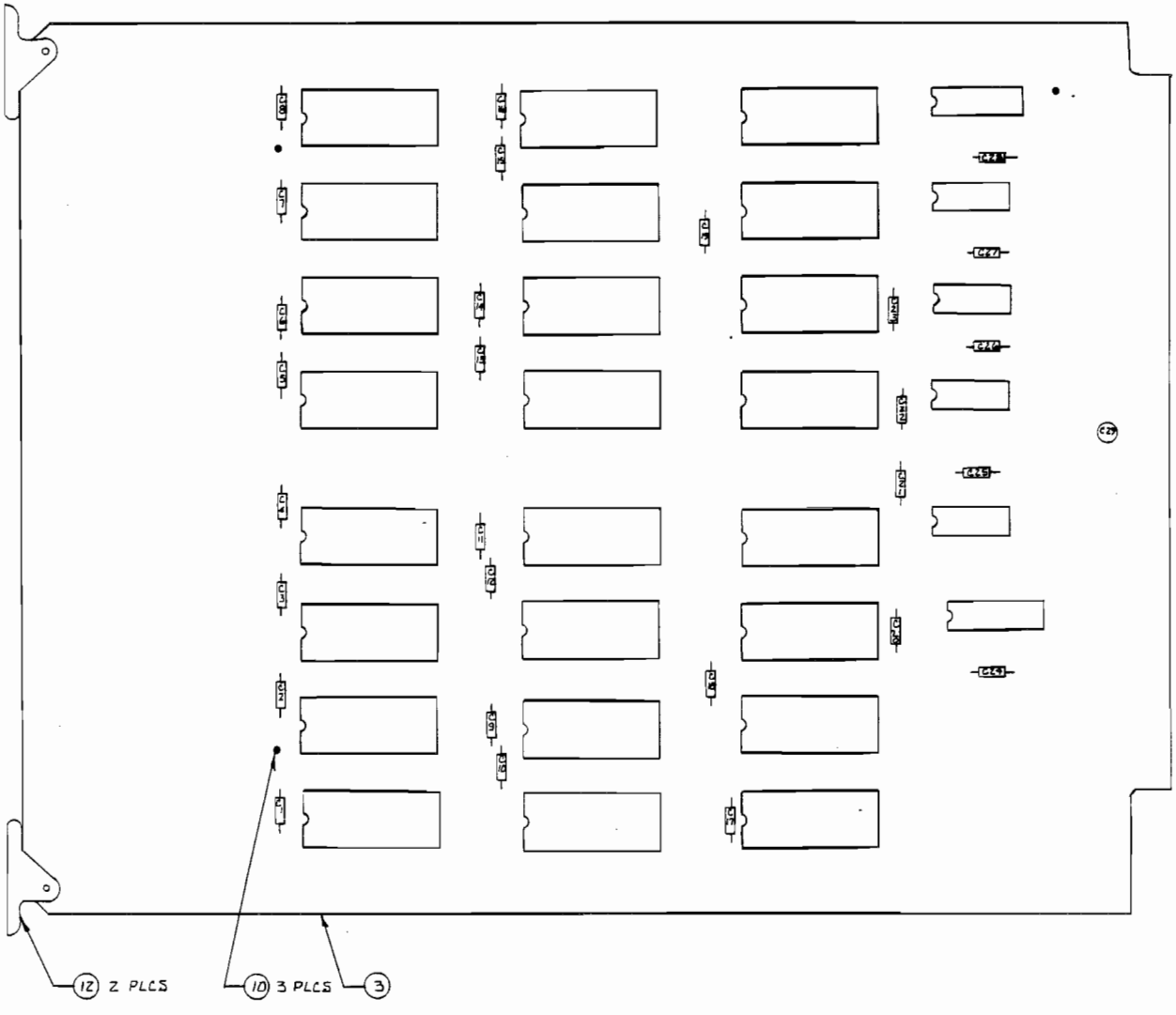

ASSY SOUND BOARD 005 DRAWING NUMBER 834-0130

ITEM NO.	QTY. REQ'D	PART NO.	DESCRIPTION
24	1	314-0125	IC 74LS38, U6
25	1	314-0068	IC 74LS32, U17
26	1	314-0067	IC 74LS30, U10
27	1	314-0051	IC 7417, U19
28	1	314-0085	IC 74LS14, U4
29	1	314-0019	IC 74LS04, U11
30	1	213-0003	SKT 14 Pin Dual Inln, XU26
31	3	470-0223	Res 22K Ohm ¼W 5%, R71, R115, R116
32	9	470-0153	Res 15K Ohm ¼W 5%, R5, R50, R53, R54, R58, R65, R75, R85, R113
33	2	470-0123	Res 12K Ohm ¼W 5%, R104, R105
2 34	20	470-0103	Res 10K Ohm ¼W 5%, R44, R45, R56, R62, R70 R74, R78, R80, R91, R93, R97, R100 - R103, R107, R111, R112, R118, R135
1 35	17	470-0472	Res 4.7K Ohm ¼W 5%, R1 - R4, R9, R13, R26 - R33, R41, R57, R106, R141
36	1	470-0392	Res 3.9K Ohm ¼W 5%, R49
37	3	470-0332	Res 3.3K Ohm ¼W 5%, R89, R119, R122
38	6	470-0222	Res 2.2K Ohm ¼W 5%, R42, R43, R68, R69, R83, R84
39	1	470-0152	Res 1.5K Ohm ¼W 5%, R88
40	9	470-0102	Res 1K Ohm ¼W 5%, R17, R21, R24, R64, R99, R113, R123, R124
41	1	470-0821	Res 820 Ohm ¼W 5%, R96
42	3	470-0471	Res 470 Ohm ¼W 5%, R12, R16, R20
43	2	470-0221	Res 220 Ohm ¼W 5%, R95, R134
44	1	470-0121	Res 120 Ohm ¼W 5%, R94
45	3	470-0101	Res 100 Ohm ¼W 5%, R61, R82, R87

ASSY SOUND BOARD 005 DRAWING NUMBER 834-0130

ITEM NO.	QTY. REQ'D	PART NO.	DESCRIPTION
2 1	2	150-0023	Cap E 10 MF 16V U-Type, C105, C119
2 2	4	150-0007	Cap E 4.7 MV 16V U-Type, C50, C51, C66, C106
4 3	8	150-0014	Cap E 2.2 MV 25V U-Type, C8, C39, C72, C73, C79, C83, C93, C104
6 4	23	150-0009	Cap E 1MF 50V U-Type, C36, C57, C77, C78, C81, C84, C85, C87, C88, C96-C103, C108, C110, C112, C113, C115, C117
5	2	280-0330	Card Ejector
6	1	212-0081	Conn M 4 Pin RTG
7	1	212-0115	Conn M 50 Pin
8	1	213-0001	Socket 24 Pin Dual Inln, X U5
9	1	213-0004	Socket 16 Pin Dual Inln, X U8
10	9	481-0031	Diode MA 150 D1 - D9
4 11	6	482-0043	XSTR 25C - 458C, Q1 - Q6
12	1	316-1286	IC 2716 EPR - 1286,U16
13	1	316-1302	IC 6331 PR - 5001, U8
14	1	315-0080	IC 8255, U5
2 15	6	313-0034	IC LM324, U12, U18, U23, U25, U26
16	1	315-0035	IC MM5837, U13
1 17	4	313-0084	IC MB 4391 M U28, U30, U31, U32
18	1	315-0033	IC CD 4016, U29
3 19	4	314-0001	IC NE 555 DIP, U3, U21, U22, U27
20	1	314-0075	TC 7415393, U9
21	1	314-0250	IC 74LS293, U14
22	2	314-0097	IC 74LS161, U7, U15
23	3	314-0016	IC 74123, U1, U2, U20

ASSY SOUND BOARD 005 DRAWING NUMBER 834-0130

ITEM NO.	QTY. REQ'D	PART NO.	DESCRIPTION
46			
47	4	153-0066	Cap Tant 10 MF 16V, C13, C43, C46, C63
48	2	153-0065	Cap Tant 3.3 MF 16V, C14, C15
49	1	153-0003	Cap Tant 2.2 MF 25V, C95
50	1	153-0041	Cap Tant 1.5 MF 25V, C120
51	7	153-0002	Cap Tant 1 MF 25V, C17, C25 - C27, C44, C61, C62
52	1	153-0038	Cap Tant .68 MF 16V, C75
53	1	153-0034	Cap Tant .47 MF 16V, C28
54	1	152-0031	Cap Film .1 MF 50V, C35
55	2	152-0038	Cap Film .047 MF 35/50V, C9, C59
56	2	152-0072	Cap Film .039 MF 50V, C47, C48
57	3	152-0032	Cap Film .022 MF 50/100V, C55, C56, C91
2 58	7	152-0033	Cap Film .01 MF 50V, C11, C34, C42, C67, C68, C70, C71
59	2	152-0005	Cap Film .0047 MF 50V, C52, C53
60	1	152-0054	Cap Film .001 MF 50V, C33
61			
6 62	31	151-0041	Cap Cer .1 MF 25V, C7, C10, C12, C15, C18-C24, C29-C32, C37, C38, C40, C44, C45, C49, C54, C58, C60, C63, C69, C73, C76, C82, C111, C118
1 63	7	151-0005	Cap Cer 680 PF 50V, C80, C89, C90, C107, C109, C114, C116
64			
65	6	150-0031	Cap E 470 MF 16V T-Type, C1 - C6
66	1	153-0031	Cap Tant 3.3 MF 25V, C41

ASSY SOUND BOARD 005 DRAWING NUMBER 834-0130

ITEM NO.	QTY. REQ'D	PART NO.	DESCRIPTION
67			
68	1	470-0334	Res 330 K Ohm ¼W 5%, R35
69	1	470-0272	Res 2.7 K Ohm ¼W 5%, R48
70	8	220-0196	Vol Cont 50 K Ohm, VR1 - VR8
71	1	220-0197	Vol Cont 500 Ohm, VR9
72	3	470-0105	Res 1M Ohm ¼W 5%, R14, R15, R36
73	3	470-0684	Res 680 K Ohm ¼W 5%, R39, R81, R90
74	6	470-0474	Res 470 K Ohm ¼W 5%, R10, R11, R18, R19, R22, R23
75	1	470-0394	Res 390 K Ohm ¼W 5%, R67
76	1	470-0224	Res 220 K Ohm ¼W 5%, R66
77	3	470-0154	Res 150 K Ohm ¼W 5%, R46, R51, R98
1 78	14	470-0104	Res 100 K Ohm ¼W 5%, R40, R52, R55, R59, R63, R76, R77, R79, R92, R110, R120, R121, R136, R137
1 79	15	470-0513	Res 51 K Ohm ¼W 5%, R47, R50, R60, R72, R73, R108, R109, R125 - R132
80	5	470-0473	Res 47 K Ohm ¼W 5%, R6 - R8, R86, R117
81	2	470-0333	Res 33 K Ohm ¼W 5%, R138, R139
82	1	470-0273	Res 27 K Ohm ¼W 5%, R34

ASSEMBLY VIDEO 1 BOARD MODIFIED DRAWING NUMBER 800-0216

ITEM NO.	QTY. REQ'D	PART NO.	DESCRIPTION
1	1	800-0212	Vic Replacement Board Assembly
2	1	800-0106	Video 1 Board Assembly

Video I Board Modified Assembly
800-0216

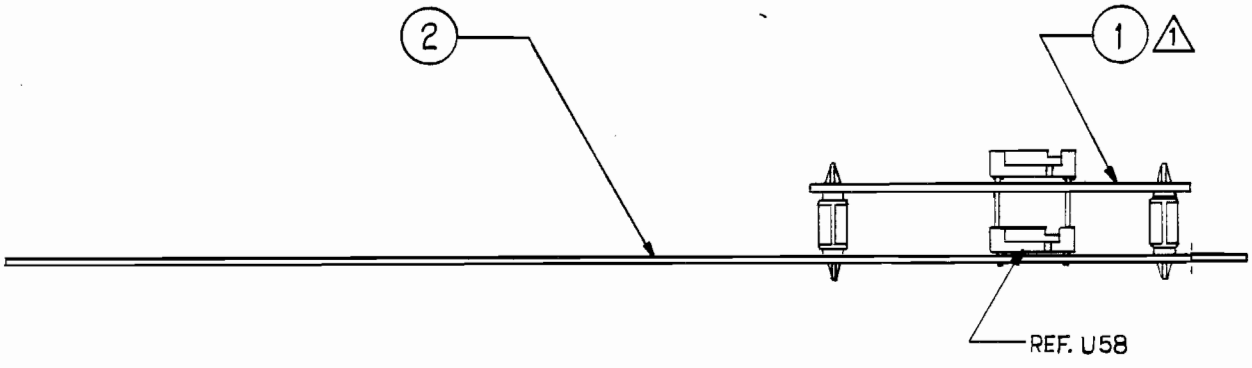

ASSEMBLY VIDEO 1 BOARD DRAWING NUMBER 800-0106

ITEM NO.	QTY. REQ'D	PART NO.	DESCRIPTION
1	3	150-0088	Cap E 10uf 25V, C80-C82
2	1	151-0005	Cap Cer 680pf 50V, C79
3	1	151-0008	Cap Cer .001uf 50V, C65
4	2	151-0011	Cap Cer .01uf 50V, C54, C64
5	7	151-0058	Cap Cer .01uf 16V AX, C57, 60, 63, 70, 71, 84, 86,
6	61	151-0060	Cap Cer .1uf 16V AX, C13-53, 56, 58, 59, 62, 66-69, 72-78, 83, 85, 87, 88, 89
7	11	151-0061	Cap Cer 220pf, 16V AX, C1-C9, C11, C12
8	2	152-0007	Cap Film .001, 250V, C55, C61
9	1	170-0193	PC Board
10	3	211-0008	Conn Pin Test PT, TP1-TP3
11	1	230-0009	Xtal 15.46848, Y1
12	1	212-0099	Conn 15 Pin M RTA
13	2	314-0001	IC NE555, U1 U10
14	2	314-0040	IC 74LS125, U32, U50
15	1	314-0046	IC 74LS04, U60
16	2	314-0058	IC 74LS08, U5, U44
17	1	314-0059	IC 74LS10, U41
18	1	314-0062	IC 74LS74, U6
19	1	314-0067	IC 74LS30, U59
20	1	314-0068	IC 74LS32, U48
21	4	314-0070	IC 74LS86, U3, U4, U39, U40
22	3	314-0073	IC 74LS175, U49, U54, U55
23	2	314-0076	IC 74LS157, U56, U57

ASSEMBLY VIDEO 1 BOARD DRAWING NUMBER 800-0106

ITEM NO.	QTY. REQ'D	PART NO.	DESCRIPTION
24	4	314-0077	IC 74LS166, U33-U36
25	2	314-0085	IC 74LS14, U37, U47
26	1	314-0139	IC 74S163, U53
27	1	314-0087	IC 74LS139,U15
28	16	315-0039	IC 4015, U16-U31
29	1	315-0042	IC Custom Chip U58
30	1	315-0065	IC 93419, U9
31	1	314-0093	IC 74LS374, U11
32	1	314-0138	IC 74S283, U38
33	1	314-0104	IC 74LS138, U51
34	2	314-0123	IC 74LS257, U13, U14
35	2	314-0124	IC 74LS33, U7, U8
36	1	314-0125	IC 74LS38, U46
37	1	316-0806	IC 32X8 Prom, U52
38	5	471-0102	Res 1K Ohm ½W 5%, R4-R6, R15, R16
39	2	471-0103	Res 10K Ohm ½W 5% R7, R17
40	2	471-0122	Res 1.2K Ohm ½W 5%, R10, R13
41	1	471-0202	Res 2K Ohm ½W 5%, R14
42	3	471-0222	Res 2.2K Ohm ½W 5%, R21-R23
43	2	471-0242	Res 2.4K Ohm ½W 5%, R9, R12
44	2	471-0330	Res 33 Ohm ½W 5%, R19, R20
45	8	471-0331	Res 330 Ohm ½W 5% R24 - R31
46	2	471-0472	Res 4.7K Ohm ½W 5% R8, R11
47	1	471-0563	Res 56K Ohm ½W 5%, R18
48	11	481-0006	Diode IN914/IN4148 D1-D11-9

ASSEMBLY VIDEO 1 BOARD DRAWING NUMBER 800-0106

ITEM NO.	QTY. REQ'D	PART NO.	DESCRIPTION
49	1	482-0006	XSTR 2N4403, Q2
50	1	482-0014	XSTR 2N4401, Q1
51	21	213-0004	SKT 16 Pin Dual INLN, UU16 - XU31, XU38, XU42, XU43, XU52, XU53
52	1	213-0005	SKT 40 Pin Dual INLN, XU58
53	2	213-0012	SKT 28 Pin Dual INLN XU9, XU12
54	1	315-0067	Header 28 Pin U12
55	1	477-0002	Res Pack 15 X 2.2K, RP1
56	3	471-0221	Res 220 Ohm ½W 5% R1 - R3
57	2	280-0330	Card Ejector
58	1	213-0003	SKT 14 Pin Dual INLN XU45
59	1	314-0140	IC 74S74, U45
60	2	314-0053	IC 74S175, U42, U43

Video I Board Assembly
800-0106

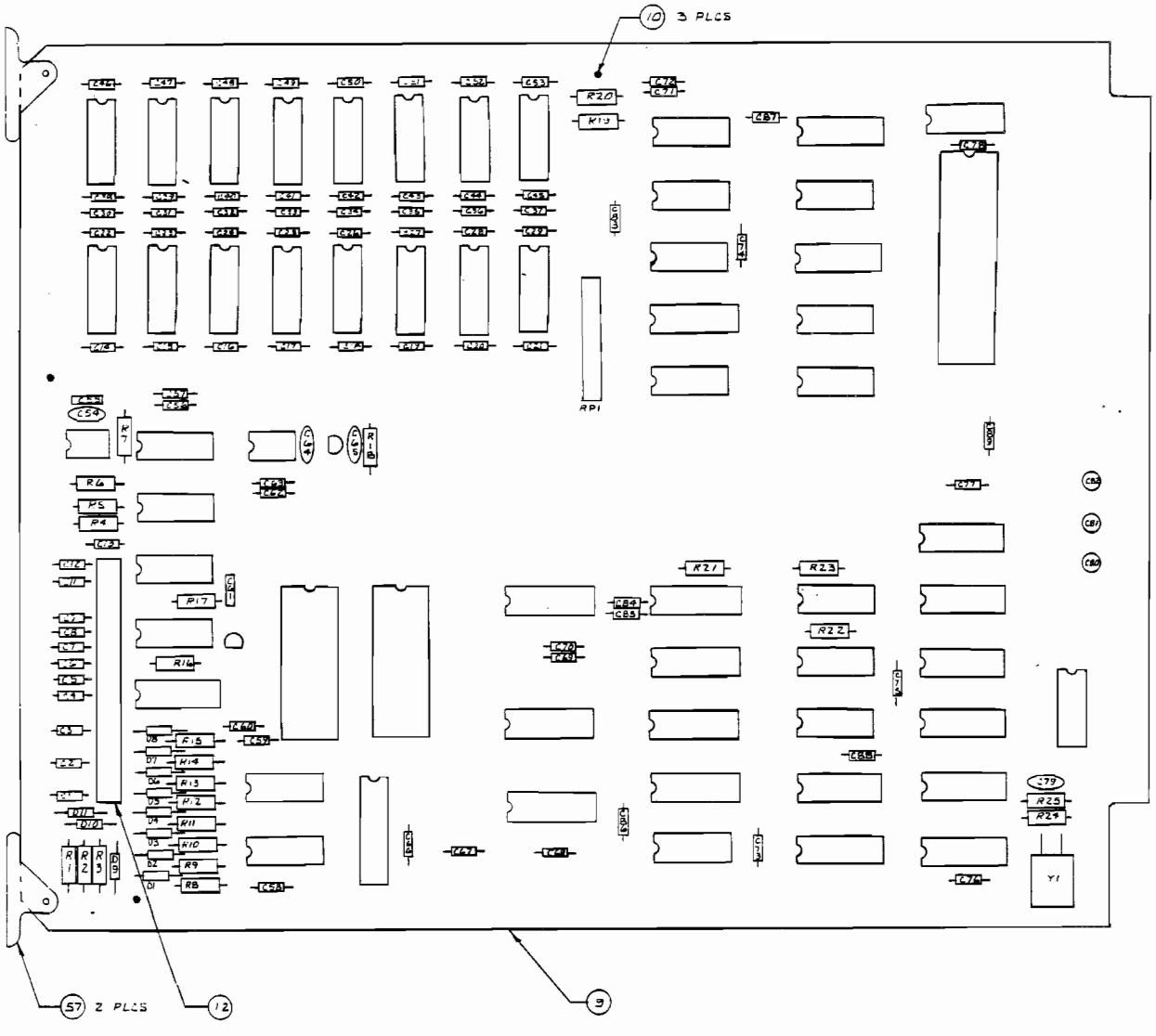

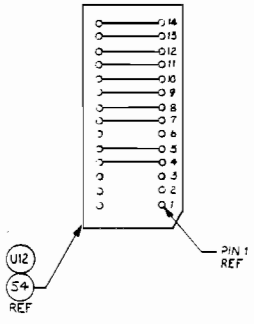

315-0067 HEADER 28 PIN

TO BE WIRED IN THIS CONFIGURATION
(SOLDER AWG 22 BUS WIRE
ACROSS HEADER PINS 10 PLC)

ASSY VIC REPLACEMENT BOARD

DRAWING NUMBER: 800-0212

ITEM NUMBER	PART NUMBER	QTY PER ASSY	DESCRIPTION
1	150-0088	1	CAP E 10UF 25V
2	151-0060	10	CAP CER .1UF 16V AX
3	170-0227A	1	PC BOARD
4	213-0014	1	SKT 40 PIN WIRE WRAP
5	314-0058	1	IC 74LS08
6	314-0059	1	IC 74LS10
7	314-0062	3	IC 74LS74
8	314-0067	1	IC 74LS30
9	314-0070	1	IC 74LS86
10	314-0136	6	IC 74S151
11	314-0072	1	IC 74LS174
12	314-0075	2	IC 74LS393
13	314-0085	1	IC 74LS14
14	280-0354	3	PCB SUPPORT LOCKING

VIC Replacement Board Assembly
800-0212

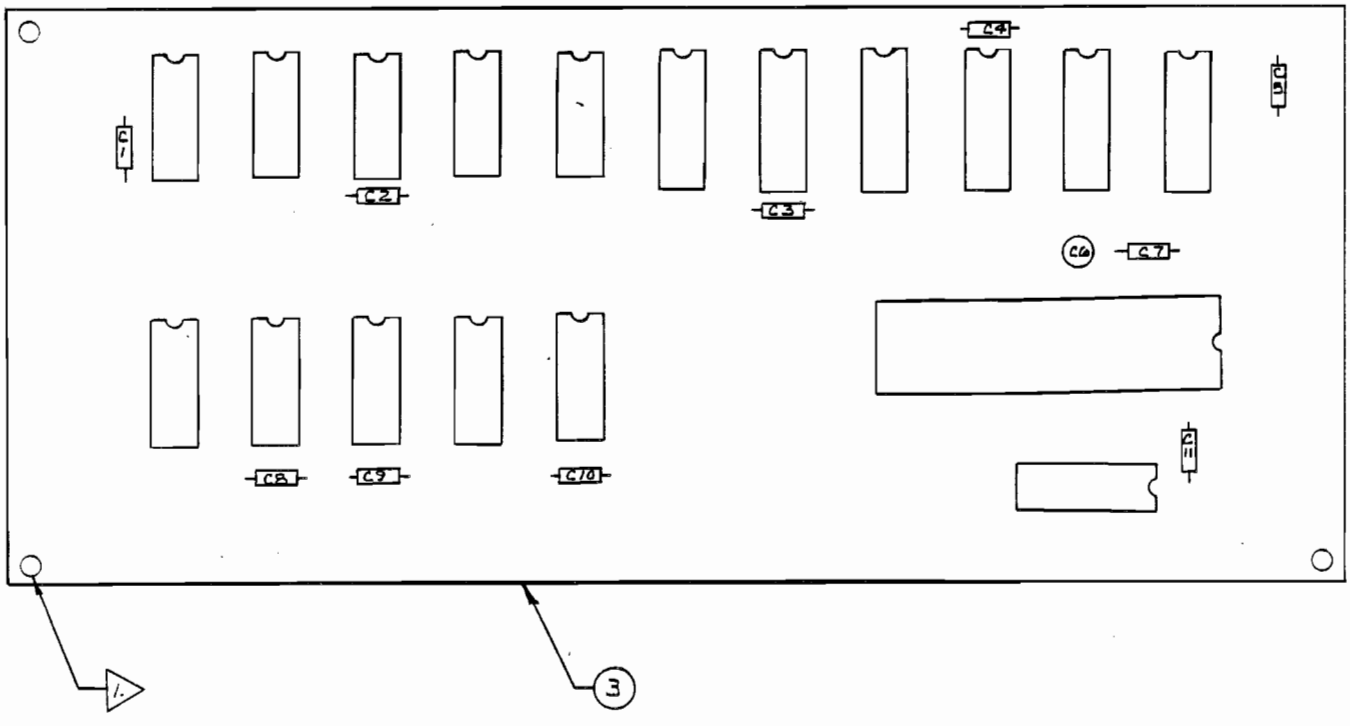

ASSEMBLY G-80 POWER SUPPLY CHASSIS DRAWING NUMBER 800-0191

ITEM NO.	QTY. REQ'D	PART NO.	DESCRIPTION
1	1	530-0016	Heat Sink G-80 Power Supply
2	1	250-0460	Chassis Support G-80 Power Supply
3	1	250-0461	Cover G-80 Power Supply
4	1	800-0170	PCB Assy G-80 Power Supply
5	6	253-0206	Support PCB Threaded
6	8	281-0032-06	SCR PN HD Phil Thrd Frmg 6-32 X .375 LG
7			
1 8	1	482-0104	Power Transister TIP 141
1 9	1	313-0023	Neg. 5 Volt Regulator 320T5
1 10	1	313-0014	Pos 12 Volt Regulator 340T12
1 11	1	313-0015	Neg 12 Volt Regulator 320T12
1 12	1	482-0100	Power Transistor (Audio AMP) TIP 125
1 13	1	482-0019	Power Transistor (Audio AMP) TIP 120
14			
15			
16	1	420-0557	Decal, Fuse
17	1	280-0117	TAB Rivet, Male 1/4"
18	1	420-0575	Decal Power Supply B
19	6	281-0001-08	SCR PN HD Phil #4-40 X .500LG
20	6	280-0341-00	Washer Shoulder #4
21	5	310-0006-01	INSL XSTR To-220
22	6	284-0001-00	Washer Flat #4
23	6	284-0031-00	Washer Lock Split #4

ASSEMBLY G-80 POWER SUPPLY CHASSIS DRAWING NUMBER 800-0191

ITEM NO.	QTY. REQ'D	PART NO.	DESCRIPTION
24	6	283-0021-00	Nut Hex Mach #4-40
25	1	800-0243	Assy. Harn XSTR G-80 P1
26	1	800-0244	Assy. Harn XSTR G-80 P2
27	1	800-0245	Assy. Harn XSTR G-80 P3
28	1	800-0246	Assy. Harn XSTR G-80 P4
29	1	800-0247	Assy. Harn XSTR G-80 P5
30	1	800-0248	Assy. Harn XSTR G-80 P6
31	1	310-0007-01	Insl XSTR "H" (To-218)

G-80 Power Supply Chassis Assembly
800-0191

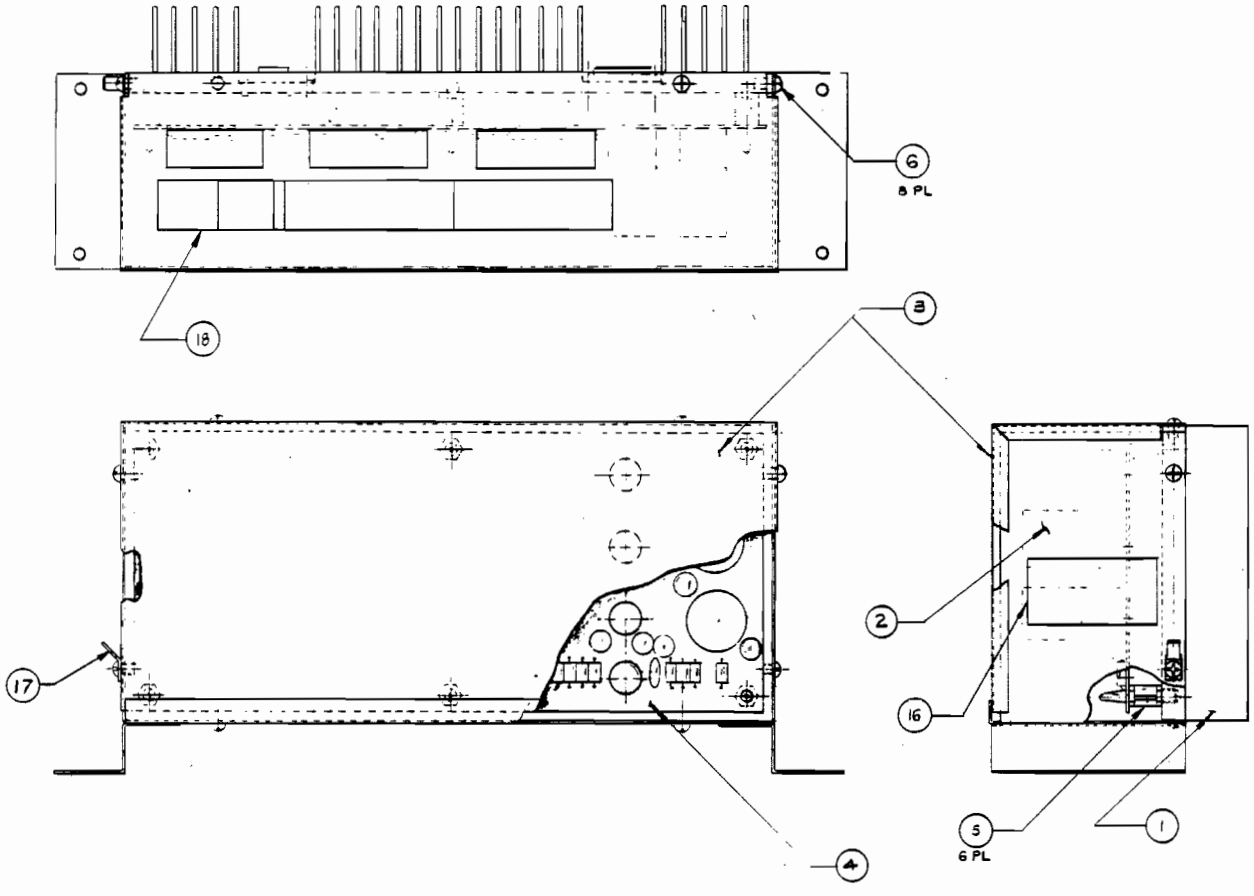

G-80 Power Supply Chassis Assembly
800-0191

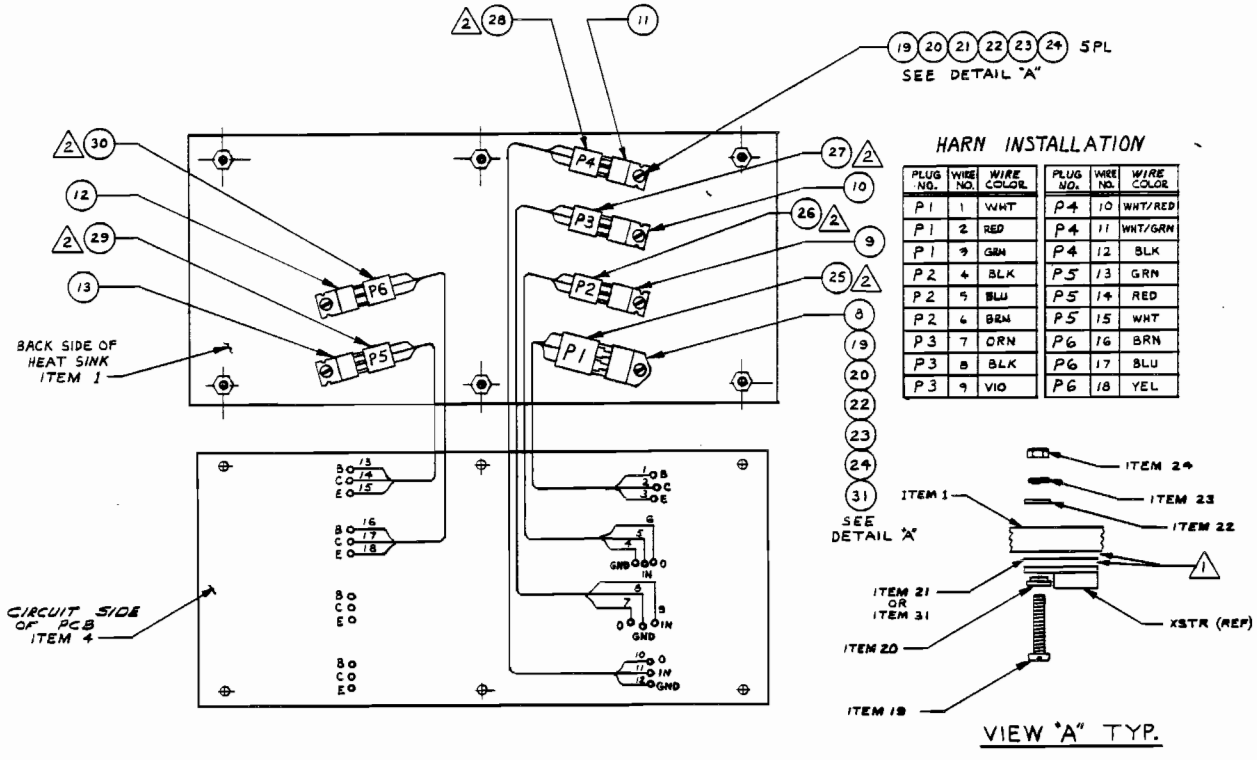

HARN INSTALLATION

PLUG NO.	WIRE NO.	WIRE COLOR
P1	1	WHT
P1	2	RED
P1	3	GRN
P2	4	BLK
P2	5	BLU
P2	6	BRN
P3	7	ORN
P3	8	BLK
P3	9	VIO

PLUG NO.	WIRE NO.	WIRE COLOR
P4	10	WHT/RED
P4	11	WHT/GRN
P4	12	BLK
P5	13	GRN
P5	14	RED
P5	15	WHT
P6	16	BRN
P6	17	BLU
P6	18	YEL

PC ASSY G-80 POWER SUPPLY

DRAWING NUMBER: 800-0170

ITEM NUMBER	PART NUMBER	QTY PER ASSY	DESCRIPTION
1	150-0088	9	CAP E 10UF 25V
2	150-0092	1	CAP E 100UF 25V
3	150-0095	1	CAP E 3300UF 25V
4	150-0096	3	CAP E 6800UF 16V
5	150-0097	4	CAP E 4700UF 25V
6	151-0002	1	CAP CER 100PF 50V
7	151-0007	1	CAP CER .005UF 100V
8	151-0011	4	CAP CER .01UF 50V
9	151-0012	3	CAP CER .1UF 50V
10	151-0021	1	CAP CER 20PF 50V
11	170-0222	1	PC BOARD
12	212-0020	2	CONN M 10 PIN RTA
13	212-0081	2	CONN M 4 PIN RTA
14	313-0001	1	IC LM723 DIP
15	471-0011	1	RES 10 OHM 1/2W 5%
16	471-0101	1	RES 100 OHM 1/2W 5%
17	471-0102	3	RES 1K OHM 1/2W 5%
18	471-0103	2	RES 10K OHM 1/2W 5%
19	471-0104	1	RES 100K OHM 1/2W 5%
20	471-0222	2	RES 2.2 OHM 1/2W 5%
21	471-0223	2	RES 22K OHM 1/2W 5%
22	471-0332	1	RES 3.3K OHM 1/2W 5%
23	471-0182	1	RES 1.8K OHM 1/2W 5%
24	471-0681	1	RES 680 OHM 1/2W 5%
25	473-05R0	1	RES .05 OHM 5W 3%
26	473-00R2	2	RES .2 OHM 3W 5%
27	475-0004	1	POT 1K CAR PCMTV
2 28	481-0002	2	DIODE MR751
4 29	481-0004	10	DIODE MR501
2 30	481-0006	3	DIODE IN914/IN4148
2 31	482-0006	2	XSTR 2N4403
2 32	482-0014	2	XSTR 2N4401
4 33	514-0002	2	FUSE 3 A NORM
6 34	514-0003	8	CLIP FUSE MTG
4 35	514-0006	1	FUSE 1.5 A NORM
4 36	514-0008	1	FUSE 10 A SLO

PC ASSY G-80 POWER SUPPLY con't

DRAWING NUMBER: 800-0170

37	800-0191	1	SCHEMATIC REF
38	471-0220	1	RES 22 OHM 1/2W 5%
39	471-0221	1	RES 220 OHM 1/2W 5%

G-80 Power Supply PC Assembly
800-0170

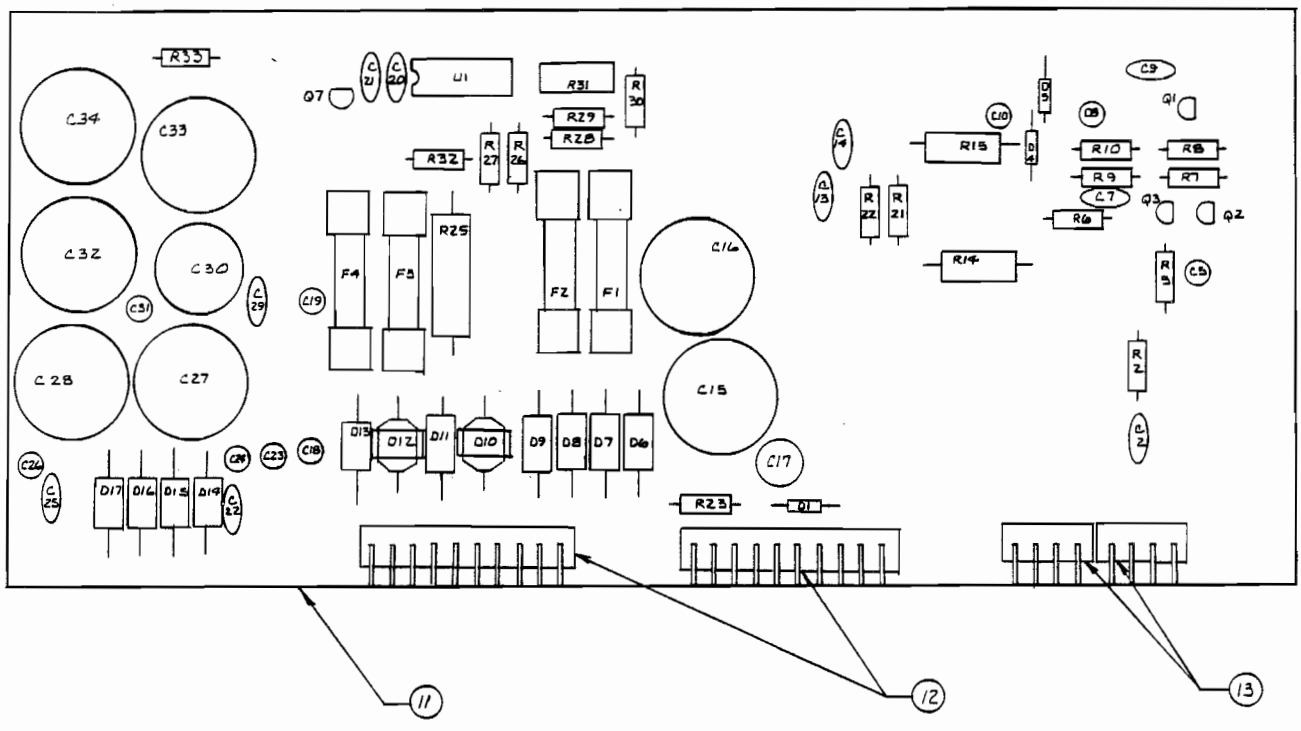

Control Panel Wiring Diagram
800-3221

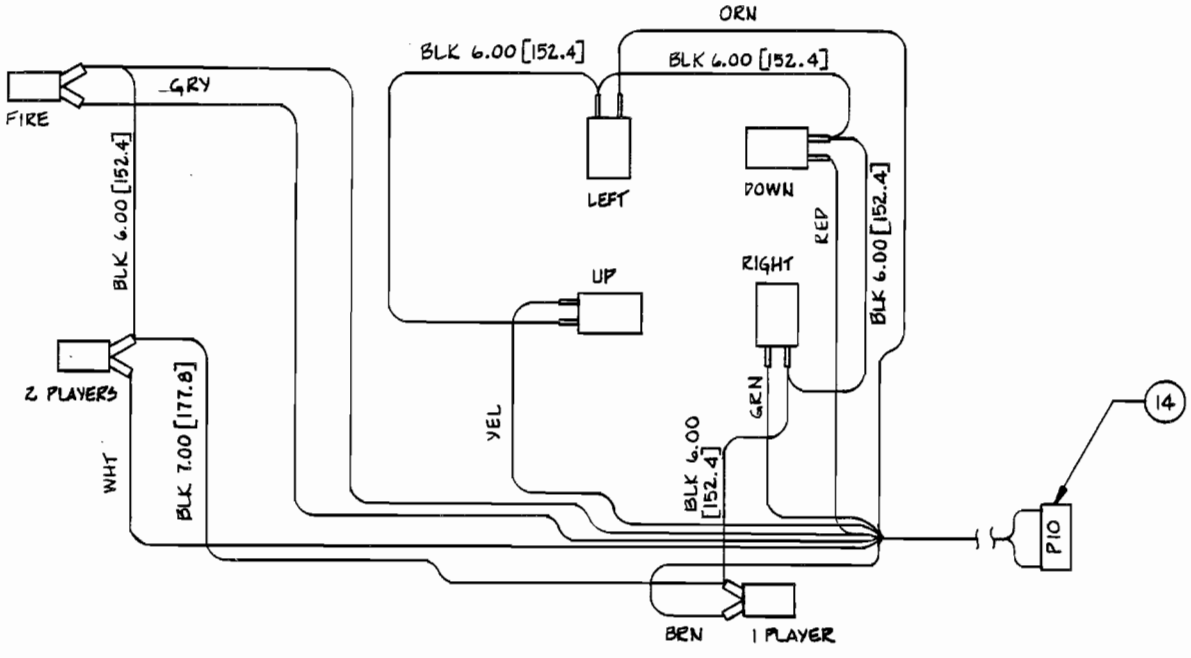

WIRING DIAGRAM ⚠2

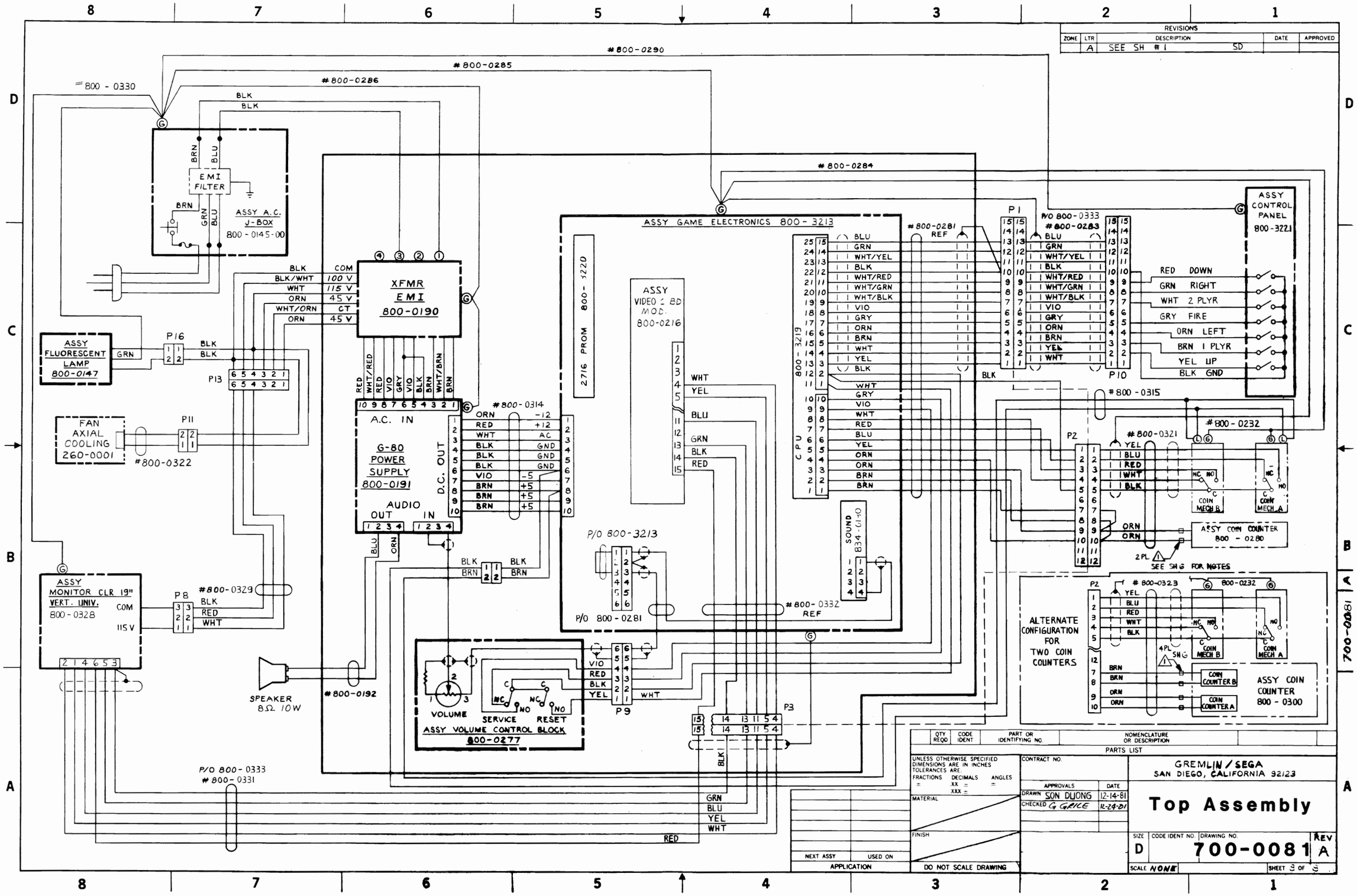

REVISIONS
ZONE LTR DESCRIPTION DATE APPROVED
A SEE SH #1 SD
#800-0290
#800-0285
#800-0286
#800-0330
EMI FILTER
ASSY A.C. J-BOX 800-0145-00
XFMR EMI 800-0190
ASSY FLUORESCENT LAMP 800-0147
FAN AXIAL COOLING 260-0001
#800-0322
A.C. IN
G-80 POWER SUPPLY 800-0191
D.C. OUT
AUDIO OUT IN
#800-0314
ASSY MONITOR CLR 19" VERT. UNIV. 800-0328
#800-0329
SPEAKER 8Ω 10W
#800-0192
P/O 800-0333 #800-0331
ASSY GAME ELECTRONICS 800-3213
2716 PROM 800-3220
ASSY VIDEO & BD MOD. 800-0216
CPU 800-3219
P/O 800-3213
P/O 800-0281
#800-0332 REF
SOUND 834-0130
#800-0281 REF
P/O 800-0333 #800-0283
ASSY CONTROL PANEL 800-3221
RED DOWN
GRN RIGHT
WHT 2 PLYR
GRY FIRE
ORN LEFT
BRN 1 PLYR
YEL UP
BLK GND
#800-0315
#800-0232
#800-0321
COIN MECH B
COIN MECH A
ASSY COIN COUNTER 800-0280
SEE SH 6 FOR NOTES
#800-0323
ALTERNATE CONFIGURATION FOR TWO COIN COUNTERS
ASSY COIN COUNTER 800-0300
COIN COUNTER B
COIN COUNTER A
VOLUME
SERVICE
RESET
ASSY VOLUME CONTROL BLOCK 800-0277
P1
P2
P3
P8
P9
P10
P11
P13
P16
QTY REQD CODE IDENT PART OR IDENTIFYING NO. NOMENCLATURE OR DESCRIPTION
PARTS LIST
UNLESS OTHERWISE SPECIFIED DIMENSIONS ARE IN INCHES TOLERANCES ARE: FRACTIONS ± DECIMALS .XX ± .XXX ± ANGLES ±
MATERIAL
FINISH
DO NOT SCALE DRAWING
NEXT ASSY USED ON
APPLICATION
CONTRACT NO.
APPROVALS DATE
DRAWN SON DUONG 12-14-81
CHECKED G GRICE 12-24-81
GREMLIN / SEGA
SAN DIEGO, CALIFORNIA 92123
Top Assembly
SIZE D CODE IDENT NO. DRAWING NO. 700-0081 REV A
SCALE NONE SHEET 3 OF 3
700-0081

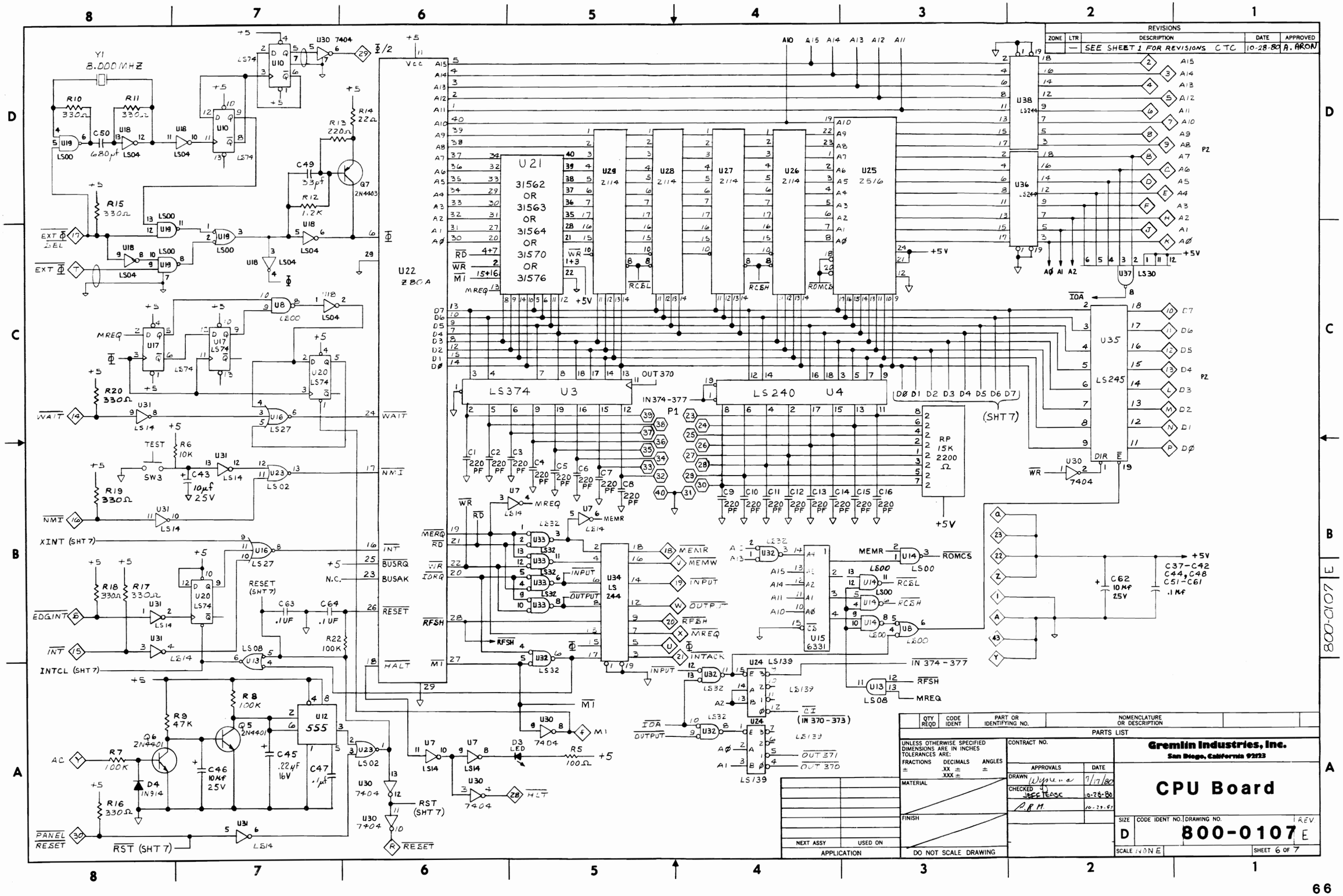

REVISIONS
ZONE | LTR | DESCRIPTION | DATE | APPROVED
— | SEE SHEET 1 FOR REVISIONS CTC | 10-28-80 | A. ARON
Y1 8.000MHZ
U22 Z80A
U21 31562 OR 31563 OR 31564 OR 31570 OR 31576
U29 2114
U28 2114
U27 2114
U26 2114
U25 2516
U38 LS244
U36 LS244
U37 LS30
U35 LS245
U34 LS 244
U15 6331
U12 555
LS374 U3
LS240 U4
RP 15K 2200 Ω
U24 LS139
Q7 2N4403
Q6 2N4401
Q5 2N4401
D4 1N914
D3 LED
SW3
P1
P2
(SHT 7)
IN 374-377
OUT 370
OUT 371
IN 370-373
XINT (SHT 7)
INTCL (SHT 7)
RST (SHT 7)
EDGINT
PANEL RESET
AC
WAIT
NMI
INT
BUSRQ
BUSAK
RESET
HALT
MEMR
MEMW
INPUT
OUTPUT
RFSH
MREQ
INTACK
ROMCS
RCSL
RCSH
IOA
IOR
C37-C42 C44, C48 C51-C61 .1 MF
C62 10 MF 25V
C63 .1 UF
C64 .1 UF
C45 .22 MF 16V
C46 10 MF 25V
C47 .1 MF
C43 10 MF 25V
C50 680 PF
C49 33 PF
R12 1.2K
R13 220 Ω
R14 22 Ω
R15 330 Ω
R16 330 Ω
R17 330 Ω
R18 330 Ω
R19 330 Ω
R20 330 Ω
R22 100K
R5 100 Ω
R6 10K
R7 100K
R8 100K
R9 47K
R10 330 Ω
R11 330 Ω
R13 220 Ω
R14 22 Ω
R15 330 Ω
R16 330 Ω
R17 330 Ω
R18 330 Ω
R19 330 Ω
R20 330 Ω
R22 100K
R5 100 Ω
R6 10K
R7 100K
R8 100K
R9 47K
C1 220 PF
C2 220 PF
C3 220 PF
C4 220 PF
C5 220 PF
C6 220 PF
C7 220 PF
C8 220 PF
C9 220 PF
C10 220 PF
C11 220 PF
C12 220 PF
C13 220 PF
C14 220 PF
C15 220 PF
C16 220 PF
+5V
QTY REQD | CODE IDENT | PART OR IDENTIFYING NO. | NOMENCLATURE OR DESCRIPTION
PARTS LIST
UNLESS OTHERWISE SPECIFIED DIMENSIONS ARE IN INCHES TOLERANCES ARE:
FRACTIONS ± | DECIMALS .XX ± .XXX ± | ANGLES ±
MATERIAL
FINISH
DO NOT SCALE DRAWING
NEXT ASSY | USED ON
APPLICATION
CONTRACT NO.
APPROVALS | DATE
DRAWN Wyneva 7/17/80
CHECKED JEFF TEASE 10-28-80
A.R.M. 10-29-80
Gremlin Industries, Inc.
San Diego, California 92123
CPU Board
SIZE D | CODE IDENT NO. | DRAWING NO. 800-0107 | REV E
SCALE NONE | SHEET 6 OF 7
800-0107 E

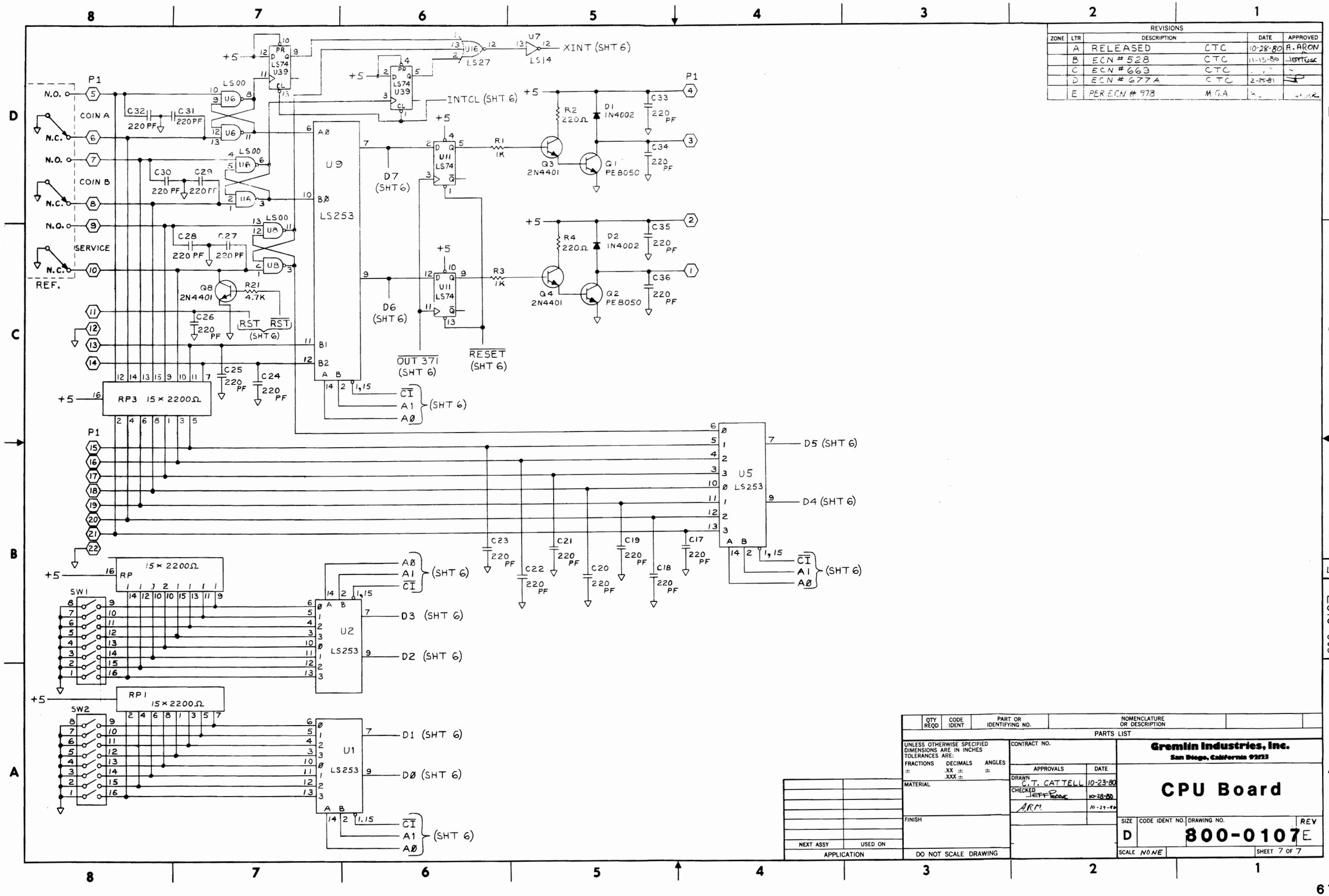

REVISIONS
ZONE | LTR | DESCRIPTION | DATE | APPROVED
A | RELEASED | CTC | 10-28-80 | A. ARON
B | ECN # 528 | CTC | 11-13-80
C | ECN # 663 | CTC
D | ECN # 677A | CTC | 2-25-81
E | PER ECN # 978 | M.G.A.
P1
N.O.
N.C.
COIN A
COIN B
SERVICE
REF.
C32 220 PF
C31 220 PF
C30 220 PF
C29 220 PF
C28 220 PF
C27 220 PF
C26 220 PF
C25 220 PF
C24 220 PF
LS00
U6
U8
Q8 2N4401
R21 4.7K
RST
(SHT 6)
U9
LS253
A0
B0
B1
B2
A B
CI
A1
A0
(SHT 6)
+5
U16
LS27
U7
LS14
XINT (SHT 6)
LS74
U39
INTCL (SHT 6)
D7 (SHT 6)
D6 (SHT 6)
U11
LS74
R1 1K
R3 1K
R2 220Ω
R4 220Ω
D1 1N4002
D2 1N4002
Q3 2N4401
Q4 2N4401
Q1 PE8050
Q2 PE8050
C33 220 PF
C34 220 PF
C35 220 PF
C36 220 PF
OUT 371 (SHT 6)
RESET (SHT 6)
RP3 15 × 2200Ω
U5
LS253
D5 (SHT 6)
D4 (SHT 6)
C23 220 PF
C22 220 PF
C21 220 PF
C20 220 PF
C19 220 PF
C18 220 PF
C17 220 PF
RP 15 × 2200Ω
SW1
U2
LS253
D3 (SHT 6)
D2 (SHT 6)
RP1 15 × 2200Ω
SW2
U1
LS253
D1 (SHT 6)
D0 (SHT 6)
QTY REQD | CODE IDENT | PART OR IDENTIFYING NO. | NOMENCLATURE OR DESCRIPTION
PARTS LIST
UNLESS OTHERWISE SPECIFIED DIMENSIONS ARE IN INCHES TOLERANCES ARE:
FRACTIONS ± DECIMALS .XX ± .XXX ± ANGLES ±
MATERIAL
FINISH
DO NOT SCALE DRAWING
NEXT ASSY | USED ON
APPLICATION
CONTRACT NO.
APPROVALS | DATE
DRAWN C.T. CATTELL 10-23-80
CHECKED JEFF PEASE 10-28-80
A.R.M. 10-29-80
Gremlin Industries, Inc.
San Diego, California 92123
CPU Board
SIZE D | CODE IDENT NO. | DRAWING NO. 800-0107 | REV E
SCALE NONE | SHEET 7 OF 7
800-0107 E

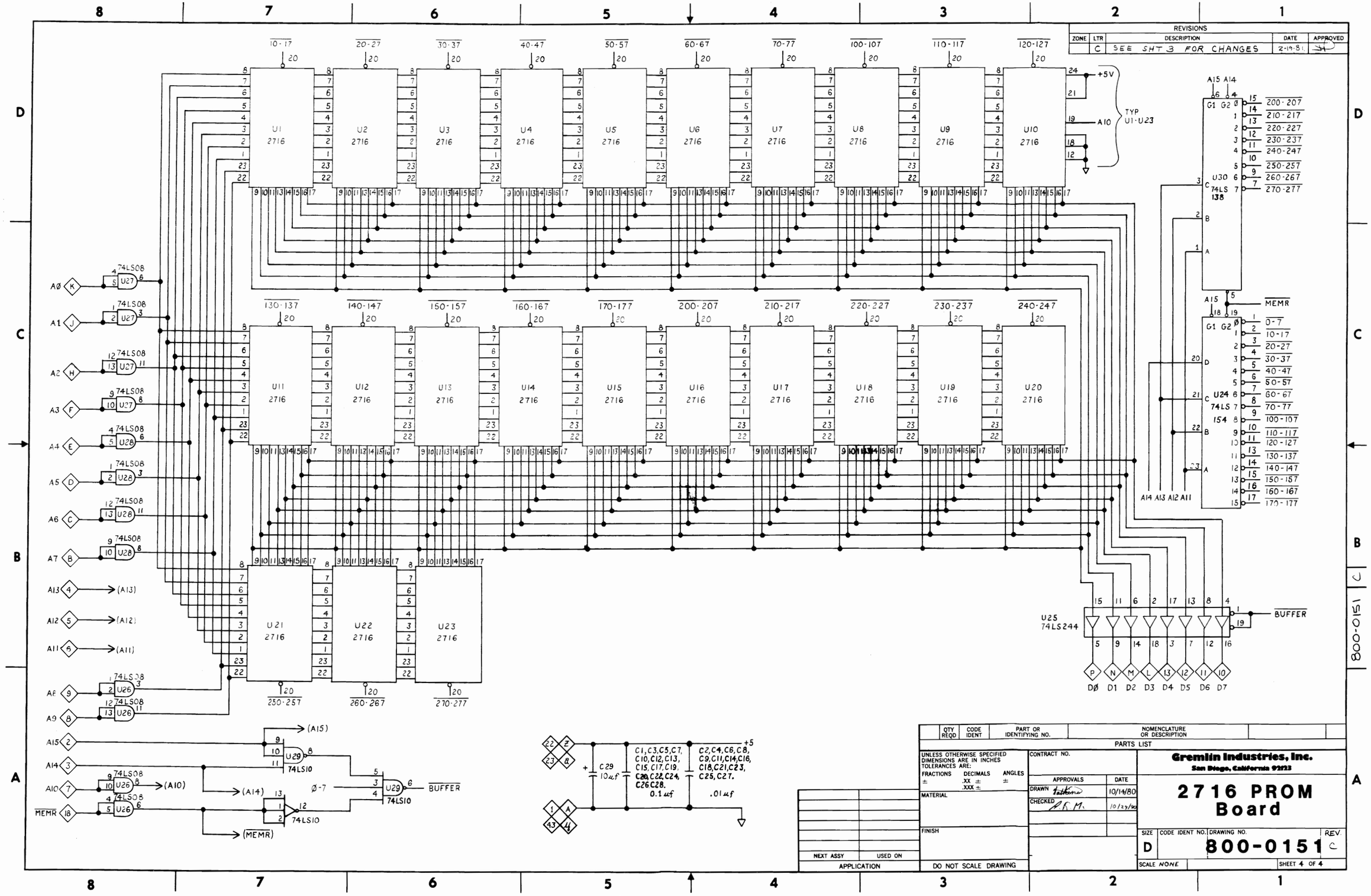
REVISIONS
ZONE | LTR | DESCRIPTION | DATE | APPROVED
C | SEE SHT 3 FOR CHANGES | 2-19-81
U1 2716
U2 2716
U3 2716
U4 2716
U5 2716
U6 2716
U7 2716
U8 2716
U9 2716
U10 2716
U11 2716
U12 2716
U13 2716
U14 2716
U15 2716
U16 2716
U17 2716
U18 2716
U19 2716
U20 2716
U21 2716
U22 2716
U23 2716
U30 74LS 138
U24 74LS 154
U25 74LS244
TYP U1-U23
+5V
A10
A15 A14
A14 A13 A12 A11
MEMR
BUFFER
DØ D1 D2 D3 D4 D5 D6 D7
74LS08
74LS10
Ø-7
(A15)
(A14)
(A10)
(MEMR)
C29 10uf
C1,C3,C5,C7, C10,C12,C13, C15,C17,C19, C20,C22,C24, C26C28. 0.1uf
C2,C4,C6,C8, C9,C11,C14,C16, C18,C21,C23, C25,C27. .01uf
+5
QTY REQD | CODE IDENT | PART OR IDENTIFYING NO. | NOMENCLATURE OR DESCRIPTION
PARTS LIST
UNLESS OTHERWISE SPECIFIED DIMENSIONS ARE IN INCHES TOLERANCES ARE:
FRACTIONS ± DECIMALS .XX ± .XXX ± ANGLES ±
MATERIAL
FINISH
DO NOT SCALE DRAWING
CONTRACT NO.
APPROVALS | DATE
DRAWN | 10/14/80
CHECKED | 10/24/80
NEXT ASSY | USED ON
APPLICATION
Gremlin Industries, Inc.
San Diego, California 92123
2716 PROM Board
SIZE D | CODE IDENT NO. | DRAWING NO. 800-0151 | REV. C
SCALE NONE | SHEET 4 OF 4
800-0151 C

REVISIONS				
ZONE	LTR	DESCRIPTION	DATE	APPROVED
		SEE SH # 1 SD		

WHISTLE SOUND TRIG (SH8)
HELICOPTER SOUND TRIG (SH 8)
MISSILE SOUND TRIG (SH 8)
SHOOT SOUND PISTOL TRIG (SH 9)
DROP SOUND BOMB TRIG (SH 9)
SMALL EXPL. SOUND TRIG (SH 8)
LARGE EXPL. SOUND TRIG (SH 8)

MELODY (SH 8)

QTY REQD	CODE IDENT	PART OR IDENTIFYING NO.	NOMENCLATURE OR DESCRIPTION	ITEM NO.

PARTS LIST

UNLESS OTHERWISE SPECIFIED DIMENSIONS ARE IN INCHES
TOLERANCES ARE:
FRACTIONS ± DECIMALS .XX ± .XXX ± ANGLES ±

MATERIAL

FINISH

DO NOT SCALE DRAWING

CONTRACT NO.

APPROVALS	DATE
DRAWN SON DUONG	12-16-81
CHECKED G. GRICE	12-24-81
MECH	
ELEC	
MFG	
PROJECT	

800-3213	700-0081
NEXT ASSY	USED ON

APPLICATION

Gremlin/SEGA
San Diego, California 92123

Sound Board

SIZE	CODE IDENT NO.	DRAWING NO.	REV
D		834-0130	A

SCALE NONE SHEET 7 OF 9

834-0130 A

REVISIONS				
ZONE	LTR	DESCRIPTION	DATE	APPROVED
		SEE SH # 1 SD		

QTY REQD	CODE IDENT	PART OR IDENTIFYING NO.	NOMENCLATURE OR DESCRIPTION	ITEM NO.
PARTS LIST				

UNLESS OTHERWISE SPECIFIED DIMENSIONS ARE IN INCHES
TOLERANCES ARE:
FRACTIONS ± DECIMALS .XX ± .XXX ± ANGLES ±

MATERIAL

FINISH

DO NOT SCALE DRAWING

CONTRACT NO.

APPROVALS	DATE
DRAWN SON DUONG	12-17-81
CHECKED G. GARCIA	12-28-81
MECH	
ELEC	
MFG	
PROJECT	

Gremlin/SEGA
San Diego, California 92123

Sound Board

SIZE	CODE IDENT NO.	DRAWING NO.	REV
D		834-0130	A

SCALE NONE SHEET 8 OF 9

800-3213	700-0081
NEXT ASSY	USED ON

APPLICATION

834-0130 A

REVISIONS				
ZONE	LTR	DESCRIPTION	DATE	APPROVED
		SEE SH # 1 SD		

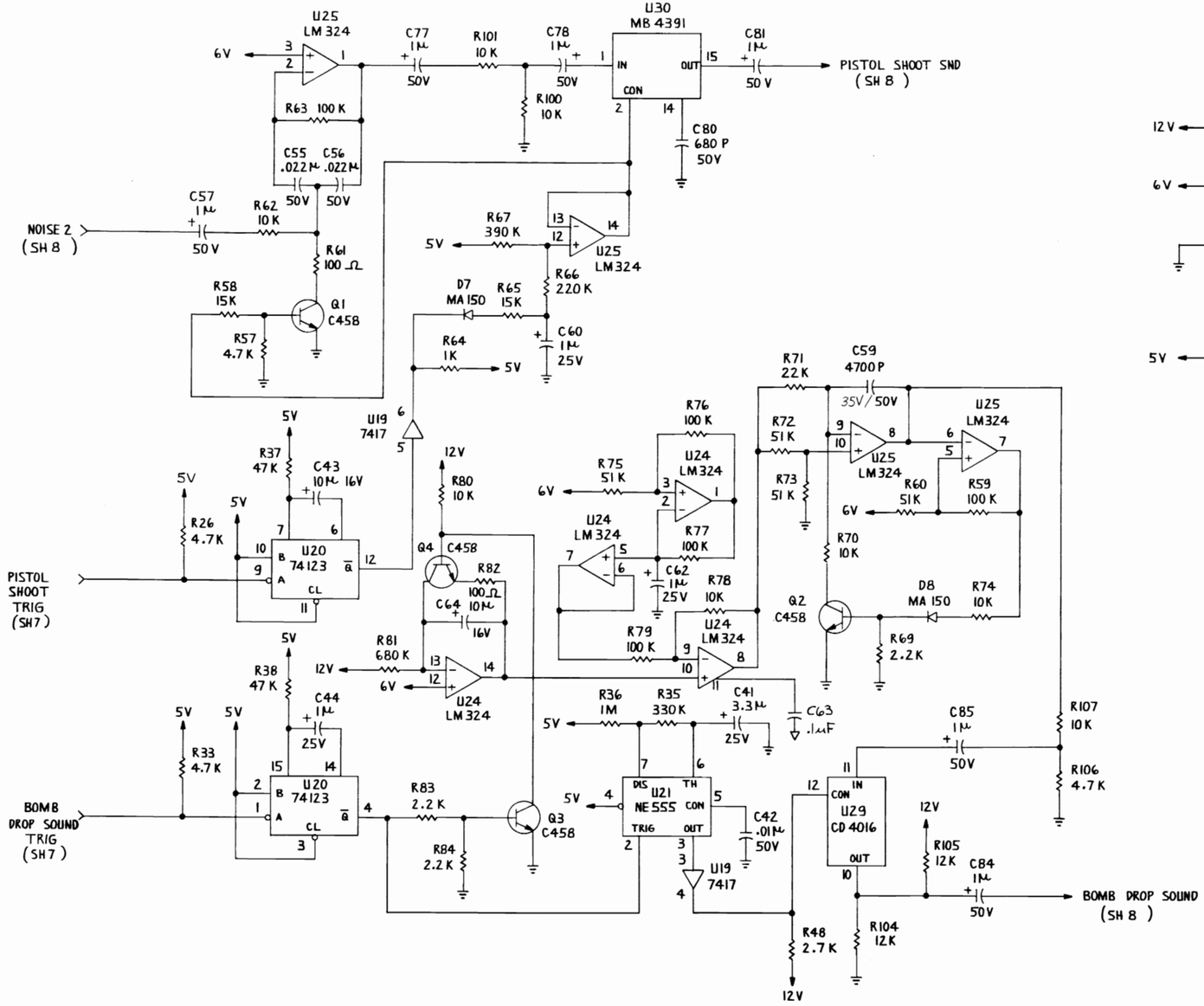

QTY REQD	CODE IDENT	PART OR IDENTIFYING NO.	NOMENCLATURE OR DESCRIPTION	ITEM NO.
PARTS LIST				

UNLESS OTHERWISE SPECIFIED DIMENSIONS ARE IN INCHES
TOLERANCES ARE:
FRACTIONS ± DECIMALS .XX ± .XXX ± ANGLES ±

MATERIAL

FINISH

DO NOT SCALE DRAWING

CONTRACT NO.

APPROVALS	DATE
DRAWN SON DUONG	12-18-81
CHECKED G GARCIA	12-28-81
MECH	
ELEC	
MFG	
PROJECT	

Gremlin/SEGA
San Diego, California 92123

Sound Board

SIZE	CODE IDENT NO.	DRAWING NO.	REV
D		834-0130	A

SCALE NONE SHEET 9 OF 9

800-3213	700-0081
NEXT ASSY	USED ON

APPLICATION

834-0130 A

REVISIONS				
ZONE	LTR	DESCRIPTION	DATE	APPROVED
	G	SEE SHEET 1 FOR REVISIONS	5-11-81	

NOTE: ALL DIODES ARE IN914.

QTY REQD	CODE IDENT	PART OR IDENTIFYING NO.	NOMENCLATURE OR DESCRIPTION

PARTS LIST

UNLESS OTHERWISE SPECIFIED DIMENSIONS ARE IN INCHES
TOLERANCES ARE:
FRACTIONS ± DECIMALS .XX ± .XXX ± ANGLES ±

MATERIAL

FINISH

DO NOT SCALE DRAWING

NEXT ASSY | USED ON

APPLICATION

CONTRACT NO.

APPROVALS	DATE
DRAWN C.T. CATTELL	10-14-80
CHECKED JEFF PEASE	10-22-80
A.R.M	10-29-80

Gremlin Industries, Inc.
San Diego, California 92123

Video Board

SIZE D | CODE IDENT NO. | DRAWING NO. 800-0106 | REV G

SCALE NONE | SHEET 6 OF 7

800-0106 G

REVISIONS				
ZONE	LTR	DESCRIPTION	DATE	APPROVED
	A	RELEASED CTC	10-28-80	A. PIRON
	G	SEE SH 1 FOR REVISIONS SD	5-4-81	

SEE NOTE ON SHEET 6.

PARTS LIST				
QTY REQD	CODE IDENT	PART OR IDENTIFYING NO.	NOMENCLATURE OR DESCRIPTION	

UNLESS OTHERWISE SPECIFIED DIMENSIONS ARE IN INCHES
TOLERANCES ARE:
FRACTIONS ± DECIMALS .XX ± .XXX ± ANGLES ±

MATERIAL

FINISH

DO NOT SCALE DRAWING

APPROVALS	DATE
DRAWN C.T. CATTELL	10-21-80
CHECKED JEFF PEASE	10-23-80
ARM	10-27-80

CONTRACT NO.

NEXT ASSY | USED ON

APPLICATION

Gremlin Industries, Inc.
San Diego, California 92123

Video Board

SIZE D | CODE IDENT NO. | DRAWING NO. 800-0106 | REV G

SCALE | SHEET 7 OF 7

800-0106 G

REVISIONS				
ZONE	LTR	DESCRIPTION	DATE	APPROVED
	A	RELEASE	01-14-81	
	B	PER ECN 655	1-30-81	
	C	PER ECN 657	2-2-81	

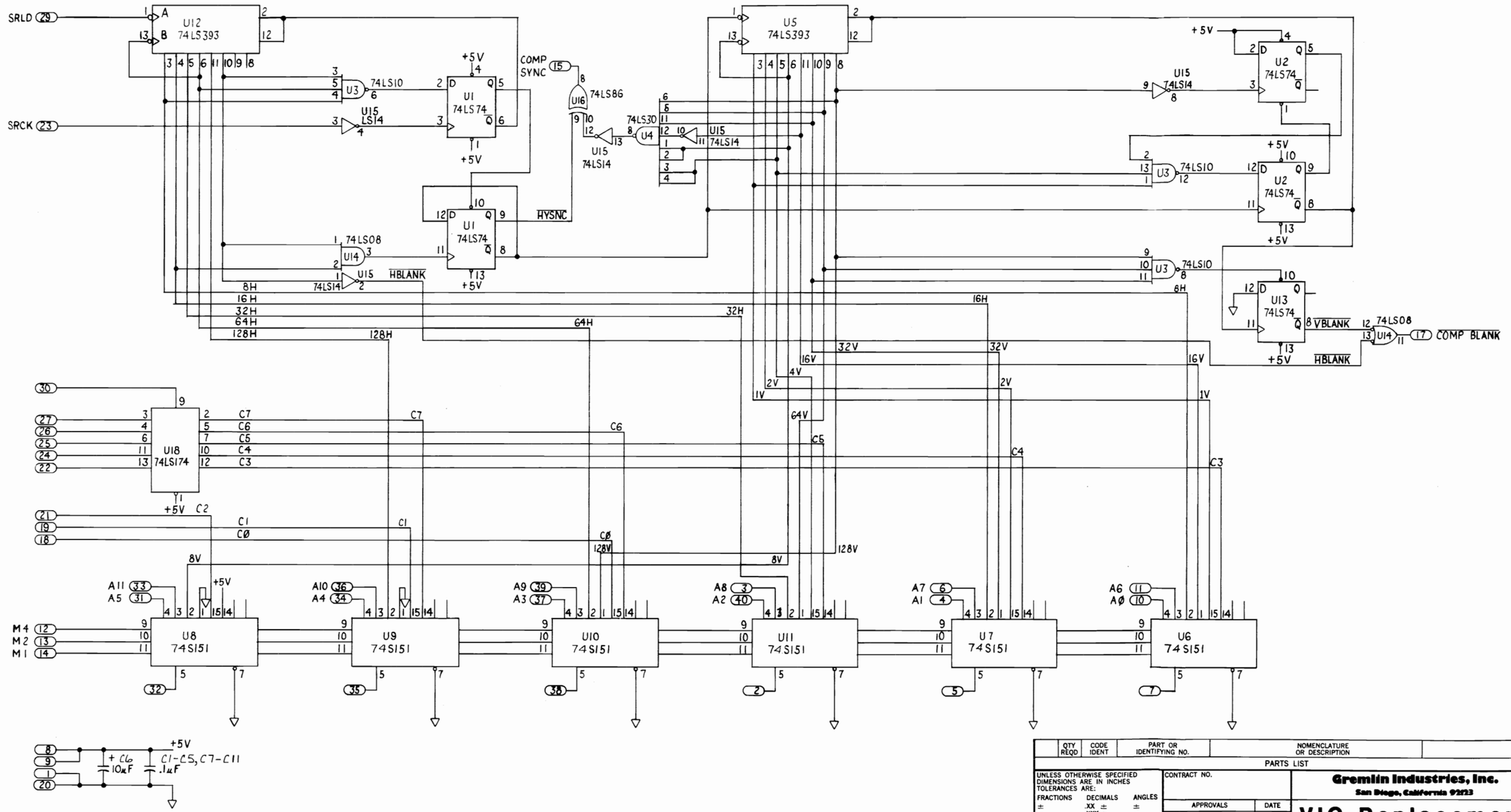

1. (XX) REPRESENTS A PIN ON THE 40 PIN WIRE WRAP SOCKET U17.

NOTES:

QTY REQD	CODE IDENT	PART OR IDENTIFYING NO.	NOMENCLATURE OR DESCRIPTION

PARTS LIST

UNLESS OTHERWISE SPECIFIED DIMENSIONS ARE IN INCHES
TOLERANCES ARE:
FRACTIONS ± DECIMALS .XX ± .XXX ± ANGLES ±

MATERIAL

FINISH

NEXT ASSY | USED ON

APPLICATION

DO NOT SCALE DRAWING

CONTRACT NO.

APPROVALS	DATE
DRAWN	01-14-80
CHECKED JEFF HASE	1-15-80
	1-15-81

Gremlin Industries, Inc.
San Diego, California 92123

VIC Replacement Board

SIZE D | CODE IDENT NO. | DRAWING NO. 800-0212 C

SCALE NONE | SHEET 4 OF 4

800-0212 C

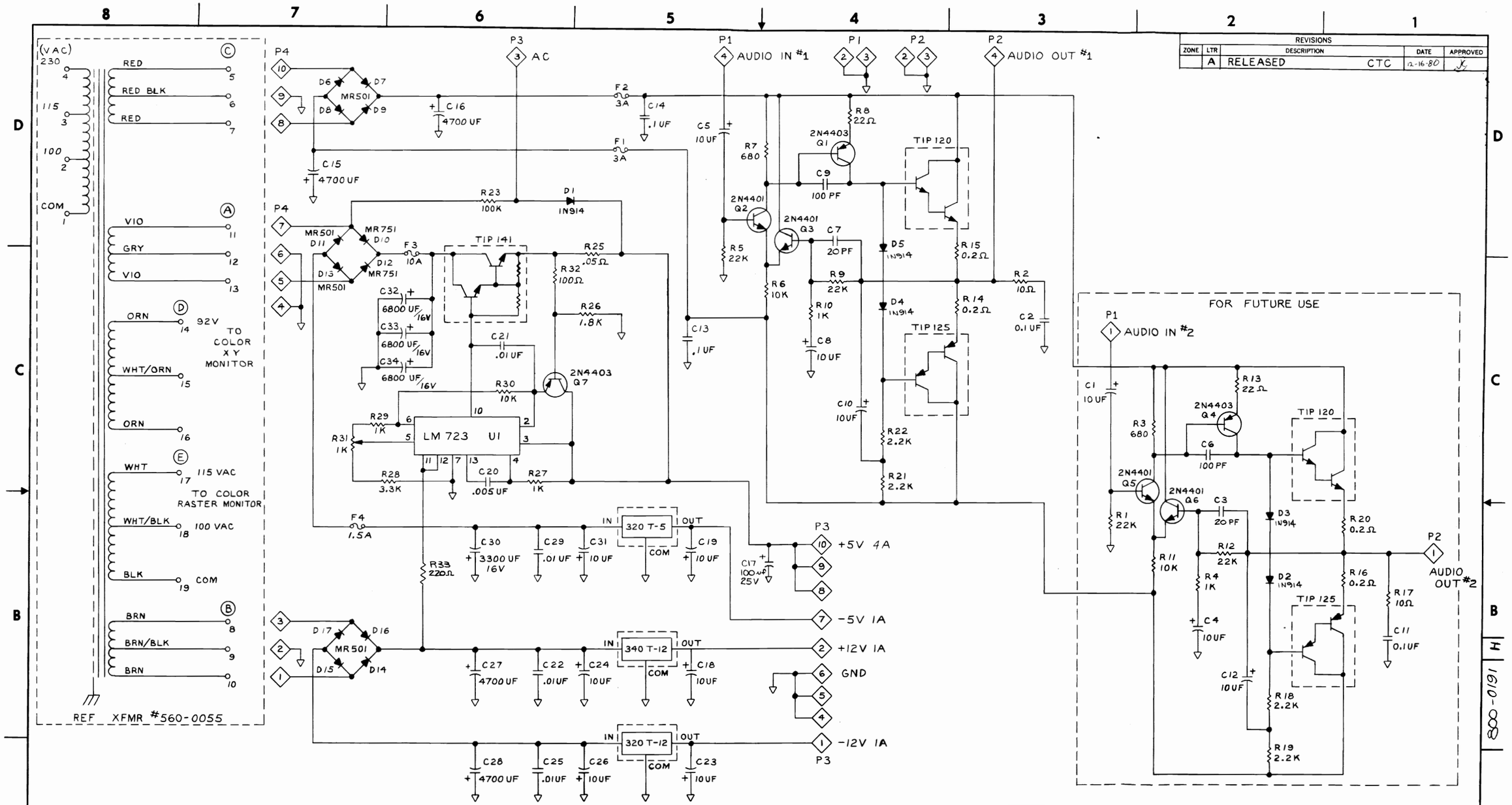

REVISIONS				
ZONE	LTR	DESCRIPTION	DATE	APPROVED
	A	RELEASED CTC	12-16-80	

NOTE: ALL RESISTANCE VALUES ARE IN OHMS, 1/2 W ±5%.

QTY REQD	CODE IDENT	PART OR IDENTIFYING NO.	NOMENCLATURE OR DESCRIPTION

PARTS LIST

UNLESS OTHERWISE SPECIFIED DIMENSIONS ARE IN INCHES TOLERANCES ARE:
FRACTIONS ± DECIMALS .XX ± .XXX ± ANGLES ±

MATERIAL

FINISH

DO NOT SCALE DRAWING

NEXT ASSY | USED ON
APPLICATION

CONTRACT NO.

APPROVALS	DATE
DRAWN CATTELL	12/11/80
CHECKED JEFF PEASE	12-16-80
Randy Hook	12-17-80

Gremlin Industries, Inc.
San Diego, California 92123

G-80 Power Supply

SIZE D | CODE IDENT NO. | DRAWING NO. 800-0191 | REV H

SCALE NONE | SHEET 3 OF 3

800-0191 H