Gremlin®/SEGA®

PULSAR™

Owner's Manual

Manual Part No. 420-0601

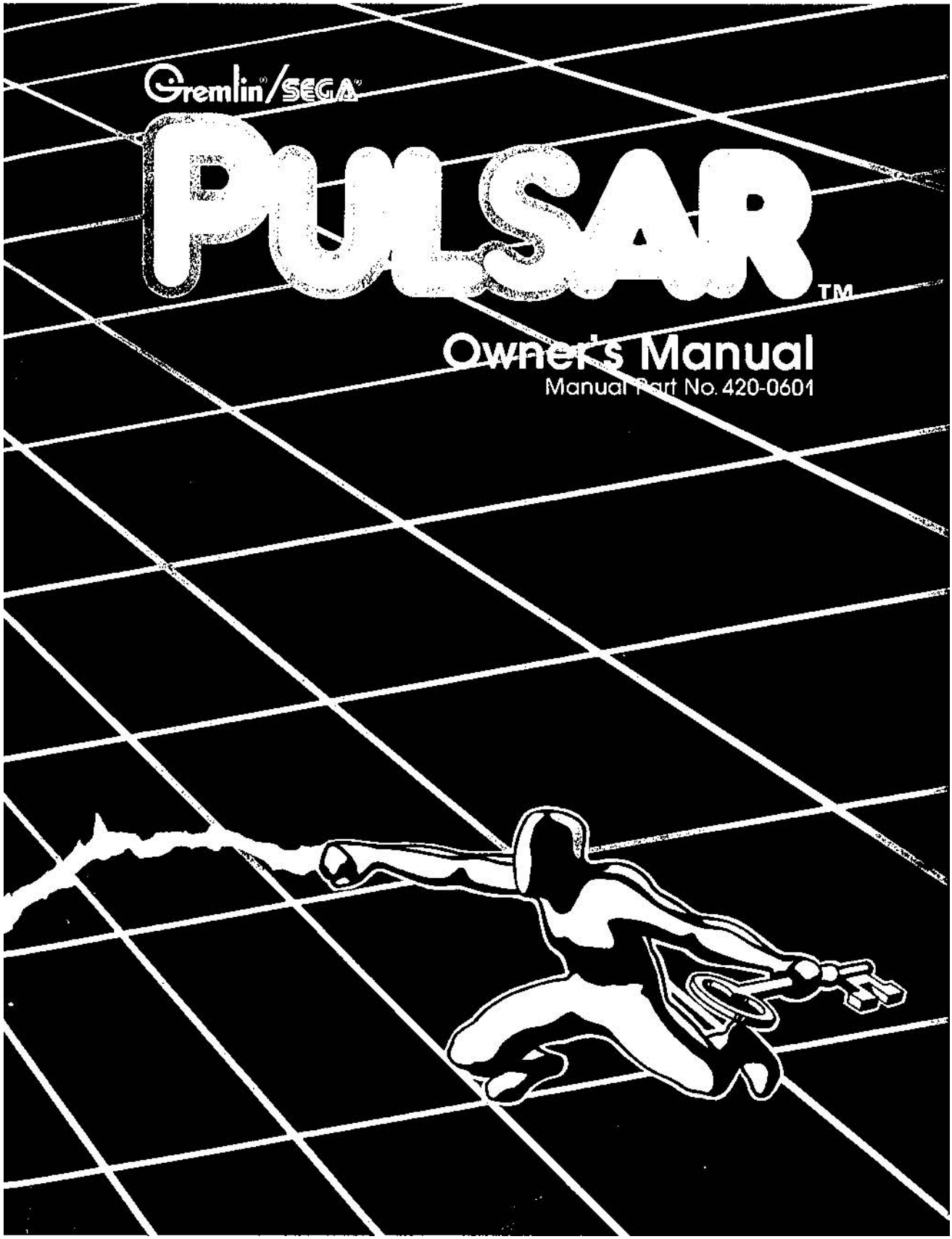

PULSAR™

Owner's Manual

Manufactured By

Gremlin/SEGA

TLX 910-335-1621

PULSAR OWNER'S MANUAL
Copyright© 1981 by Gremlin®/SEGA®, All Rights Reserved

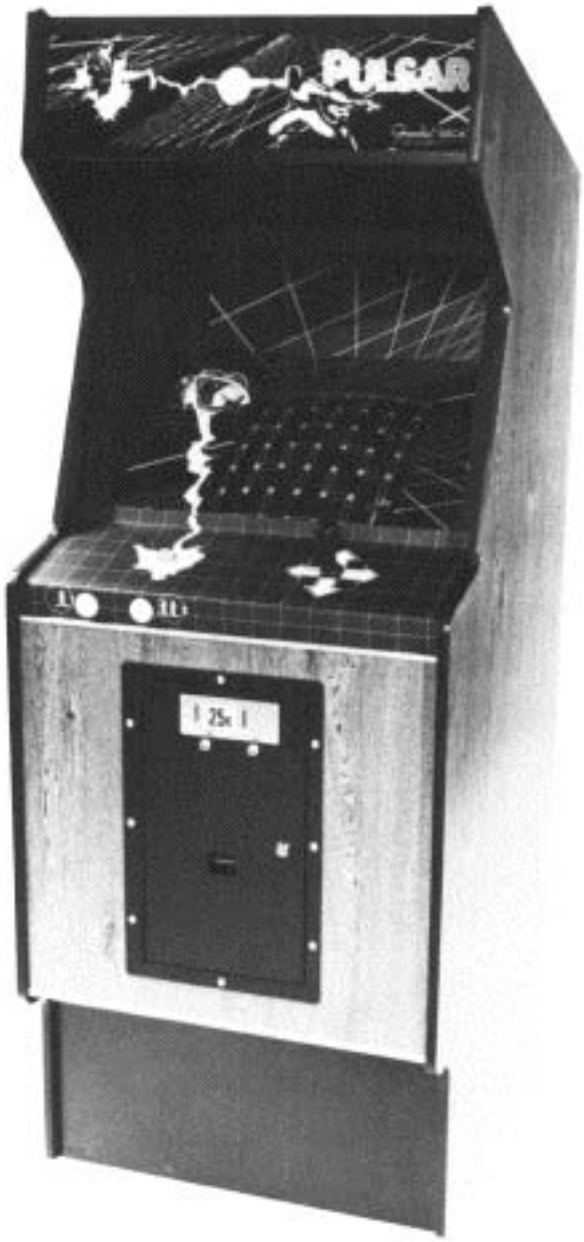
PULSAR
1
2
25¢

Game Concept

Pulsar is a one or two player game in which players maneuver their tank through a maze in an effort to secure keys neccessary to unlock the gate to the next round. Players can move their tank up/down or right/left to maneuver through the maze.

Game Play

As players travel through the mazes, they are attacked by aliens. There are three distinct aliens and they can be destroyed to assure safe passage through the maze. The first round starts with two keys required to unlock the gate and each successive maze has another key added. The keys must be transported individually. To add further excitement, there is a force field that appears randomly, blocking passageways. If a player's tank is stationary and gets caught in the force field, it will be destroyed. As long as a player keeps his tank moving, it cannot be destroyed by the force field. Players must also keep track of their fuel status. Fuel decreases during the game play. When fuel is completely expended, the tank is destroyed. Players receive fuel when they destroy an alien and are completely refueled when they enter a new round.

Scoring

Each alien ship destroyed is worth 100 points. Every key deposited in the proper lock scores 50 points (which increases with each round). Also if the keys are deposited in order (1 through 5), players receive a double bonus. With a two player game, players alternate after each tank. Players receive 2 to 5 tanks, which is operator adjustable. The game is over when all player's tanks are destroyed. The game ranks players from 1 to 30.

Options Selection

Number of Ships	1	2	3	4	5	6	7	8
2 ships	OFF	OFF						
3 ships	OFF	ON		Not Used			Not Used	
4 ships	ON	OFF						
5 ships	ON	ON						

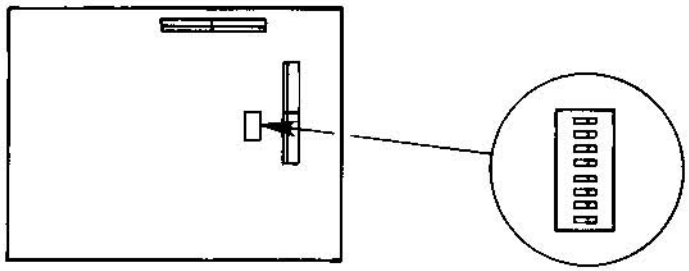

Important Notes

The following note is included in compliance with FCC rules:

WARNING: This equipment generates, uses, and can radiate radio frequency energy and if not installed and used in accordance with the instructions manual, may cause interference to radio communications. As temporarily permitted by regulation, it has not been tested for compliance with the limits for Class A computing devices pursuant to Subpart J of Part 15 FCC Rules, which are designed to provide reasonable protection against interference in which case the user at his own expense will be required to take whatever measures may be required to correct the interference.

Color Monitor Adjustments (Nanao 19")

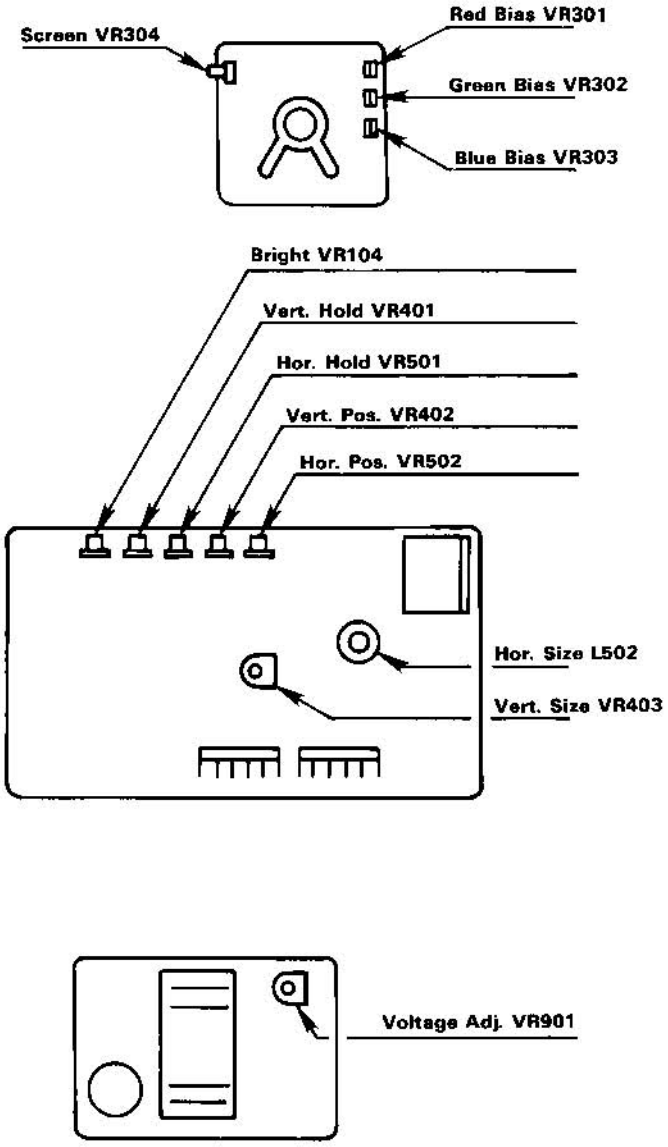

Color Monitor Adjustments (NEC 19")

Adjustable Controls on Neck PCB

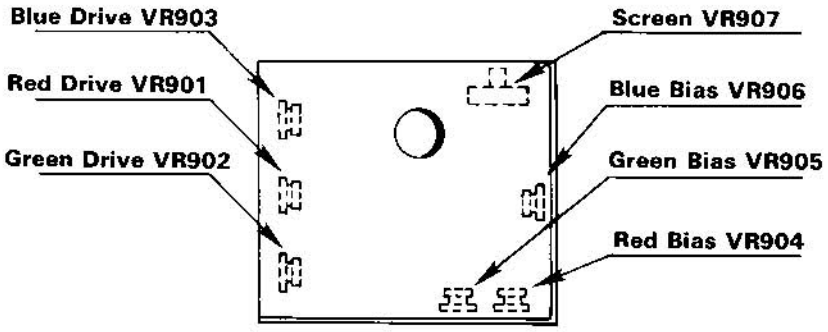

Adjustable Controls on Main PCB

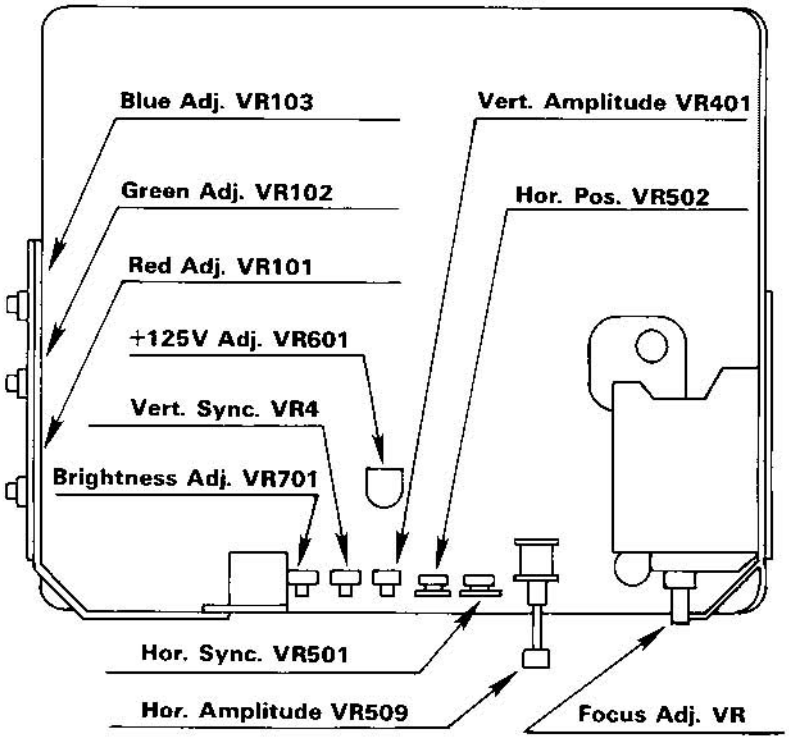

Color Monitor Adjustments
(NEC 19")

1. **Brightness Adjustment (Sub-Bright R701)**
   The CRT beam current will increase brightness when turned clockwise.
2. **Horizontal Amplitude (Amplitude in vertical direction as the H-size VR509 CRT is in the vertical direction)**
   Turn coil core clockwise to increase amplitude. Amplitude will be minimum when the core is turned counter clockwise and is at the top of the bobbin.
3. **Vertical Amplitude (Amplitude in horizontal direction as the V-size VR401 CRT is in the horizontal direction)**
   Turn dual directional horizontal amplitude control clockwise to increase amplitude.
4. **Vertical Position Adjustment (Horizontal position adjustment as the CRT is in the vertical direction)**
   If the chip inserted in K502 is inserted in K501, the center of the picture will shift to the right. If this chip is inserted in K503, the center of the picture will shift to the left.)
5. **Vertical Sync. (Horizontal sync. as the V-Hold VR4 CRT is in the vertical direction)**
   This V-Hold control will stop flow of picture from left to right or right to left.
6. **Horizontal Sync. (Vertical position adjustment as the H-Hold VR501 is in the vertical direction)**
   This control is to obtain synchronization when the horizontal oscillations or frequency drifts and slanted lines appear.
   Picture can be shifted down by turning this control clockwise within the range in which the picture will not commence to flow.
7. **Setting the +B Voltage (VR601)**
   Adjust to the 125V line (TP91) is 15V. Turn clockwise to raise voltage.
8. **Red Drive (R-Drive VR901), Blue Drive (B-Drive VR903)**
   Adjust mainly for bright white to white. When turned clockwise, it will be greenish (or bluish) white.
9. **Red Bias (R-Bias VR904), Green Bias (G-Bias VR905), Blue Bias (B-Bias VR906)**
   These 3 controls are used mainly to adjust intermediate tones and white balance in the dark portions. When turned clockwise, this color will turn dark gray.
   If the white balance adjustments in 8 and 9 are carried out while changing green and blue drive instead of independently, not only will the bright white change but the color tone of the gray portion will also change. Conversely, even if the red, green and blue drives are changed, the color tone of the bright white portion will change.
10. **Screen Adjustment (Screen VR907)**
    As in the case of the brightness adjustment, beam current will increase brightness when this control is turned clockwise. However, as white balance will be destroyed if the screen adjustment control is moved excessively, it would be advisable to adjust brightness with the brightness control. After completing brightness white balance adjustments in 7, 8 and 9, check and confirm that the beam current setting (DC voltage across) does not exceed −7.0V.
11. **Focus**
    Adjust for clearest picture. It will always be desirable to carry out focus adjustments after brightness adjustments.

COIN CHUTE ASSEMBLY

ITEM NO.	DESCRIPTION	SEGA NO.	GREMLIN NO.
1	Coin Mechanism, USA, 25¢	SGM-2862-2	220-0176
2	Bulb, 6-8v	S-91002	390-0037
3	Ace Cylinder Lock	LS-1064	220-0097

Coin Chute Door Assembly

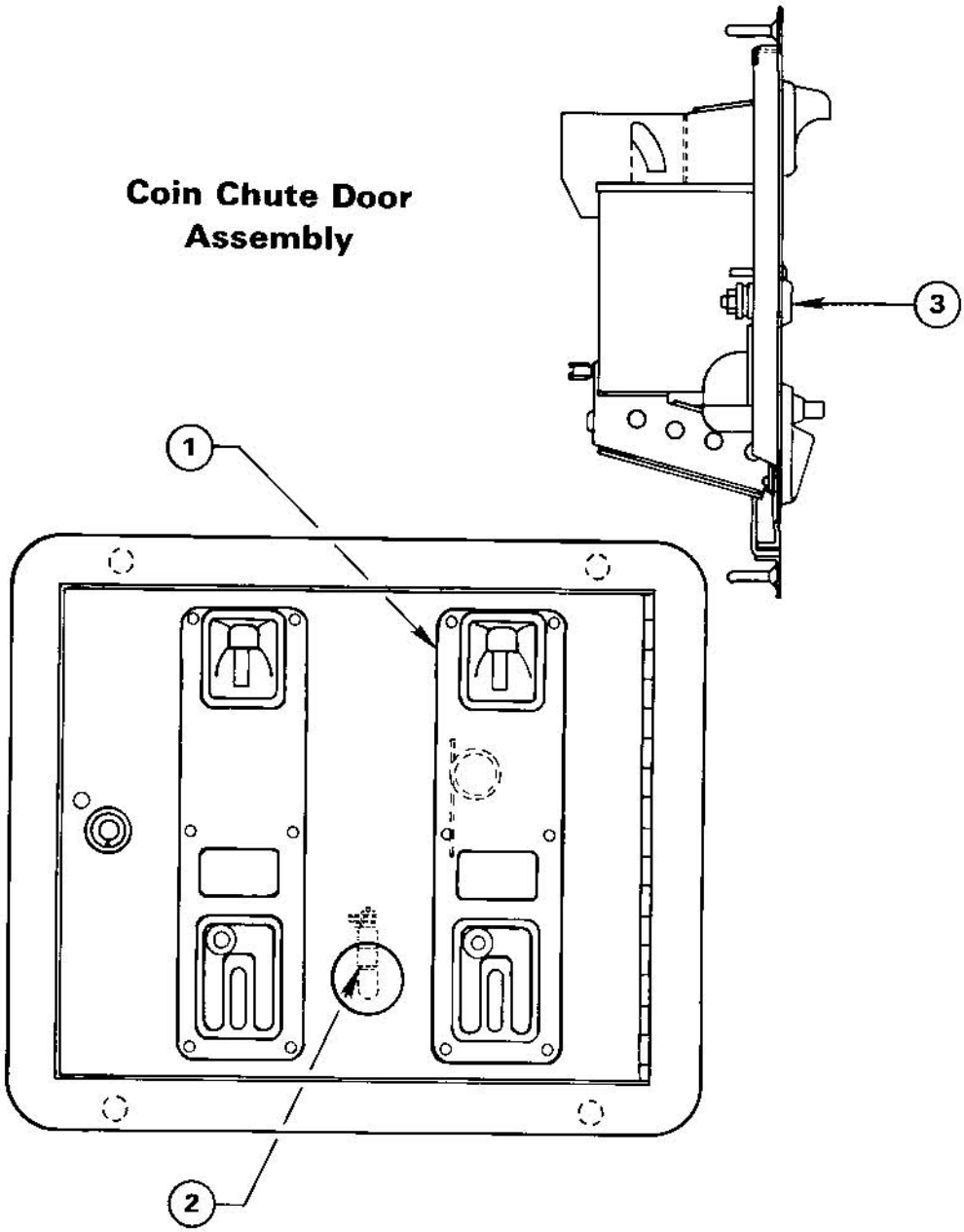

CONTROL PANEL ASSEMBLY

ITEM NO.	DESCRIPTION	SEGA NO.	GREMLIN NO.
1	Control Panel, Pulsar	PL-2002	250-0478
	Control Panel Graphic	PL-2002-B	253-0210
2	Button Housing	FE-2002	601-0603
3	Push Button, Red	FL-1010	240-0108
4	Switch Base, B	MR-2003	102-0029
5	Handle Ball, Red	MP-1025	109-0007
6	Diaphragm, Rubber	FG-2005X	601-0397
7	Shaft	FG-2006	123-0058
8	Hub	FG-2007	601-0398
9	Slider Plate	TK-2008	117-0160
10	Spacer	TK-2009	280-0358
11	Push Button, Yellow	FL-1070	240-0107
12	Switch, Micro Type	S-91421	509-0048
13	Switch, Micro Type	S-96561	509-0114
14	Feather Key	S-82871	601-0623

UPRIGHT CABINET ASSEMBLY

ITEM NO.	DESCRIPTION	GREMLIN NO.
1	PULSAR UPRIGHT GAME	734-0039
2	ASSY DUAL LOGIC BOARD PULSAR	800-3147
3	ASSY GAME POWER SUPPLY	800-0072
4	TRANSFORMER ISOLATION	560-0051
5	ASSY SOUND BOARD PULSAR	800-0208

Cabinet Assembly

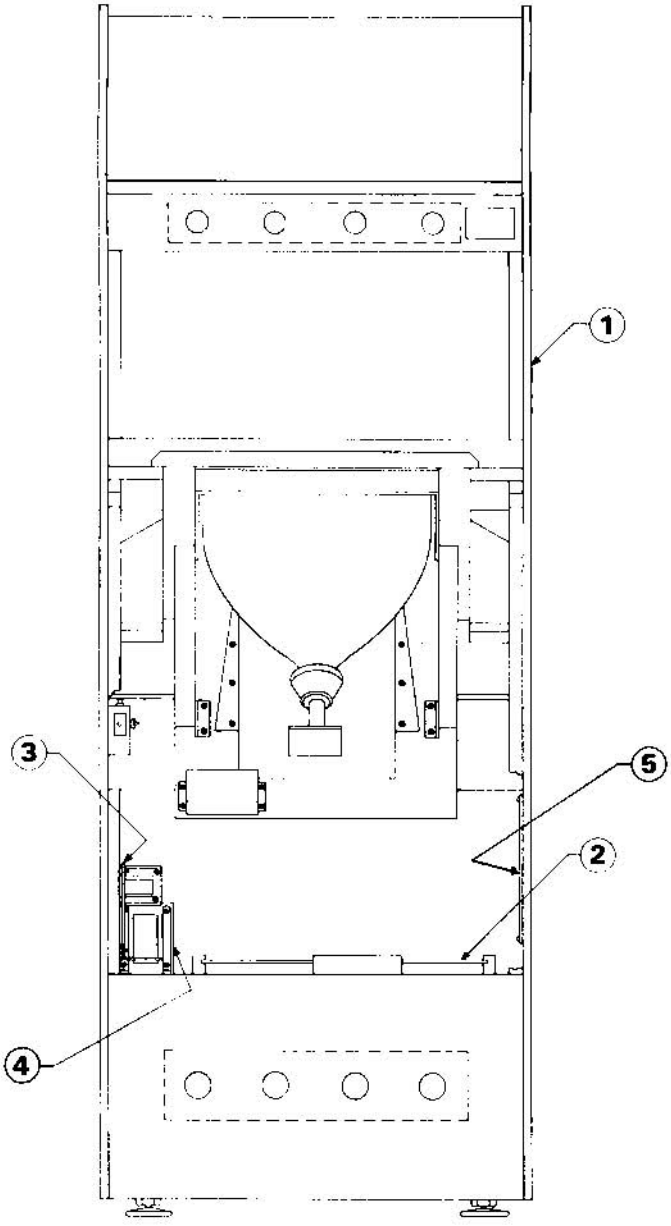

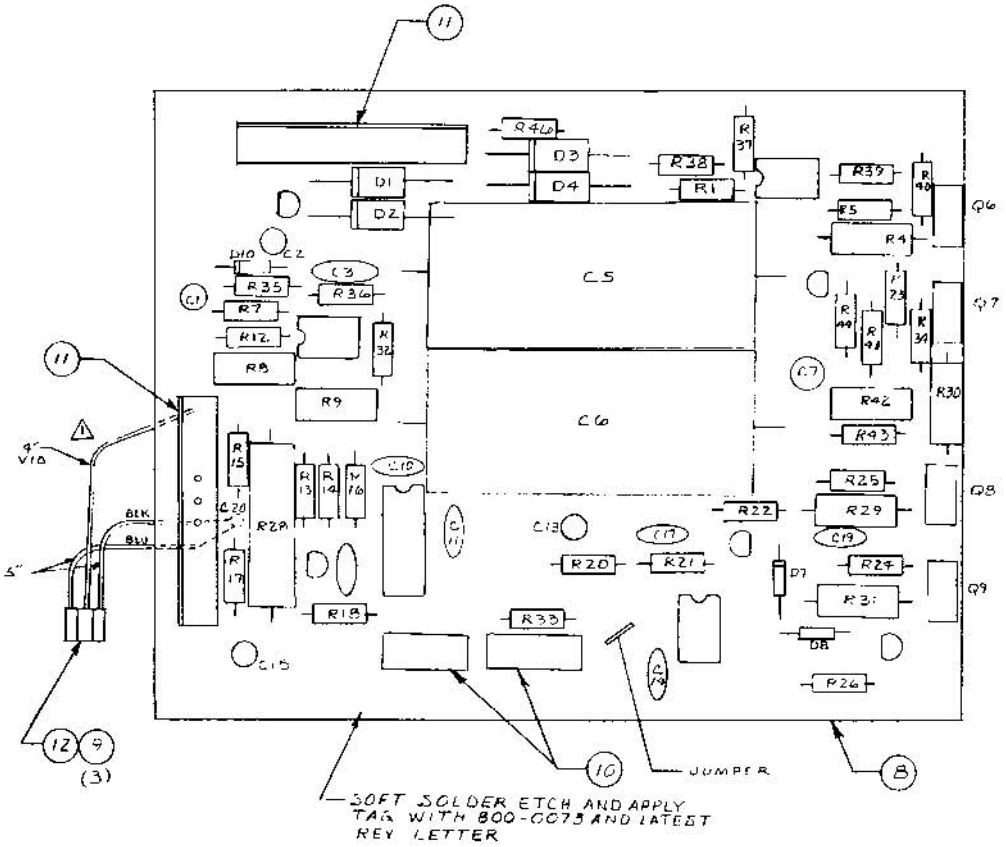

Power Supply Assembly

OPERATOR PANEL ASSEMBLY

ITEM NO.	DESCRIPTION	SEGA NO.	GREMLIN NO.
1	Volume Control, B-25K ohm	S-93157	220-0111
2	Push Button Switch	S-93697	240-0105
3	Push Button Switch	S-96477	509-0119
	Noise Filter	S-96634	601-0429

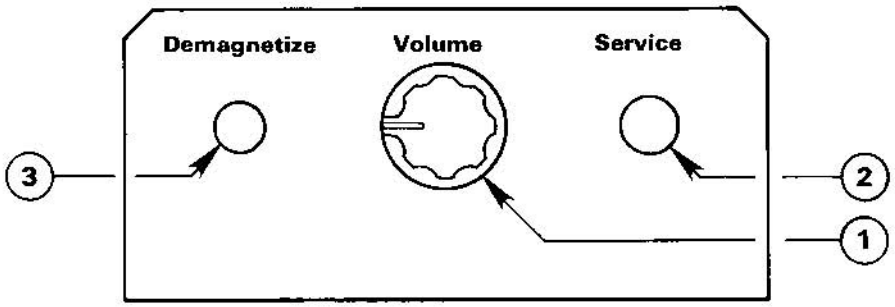

Operator Panel Assembly

Control Panel Assembly

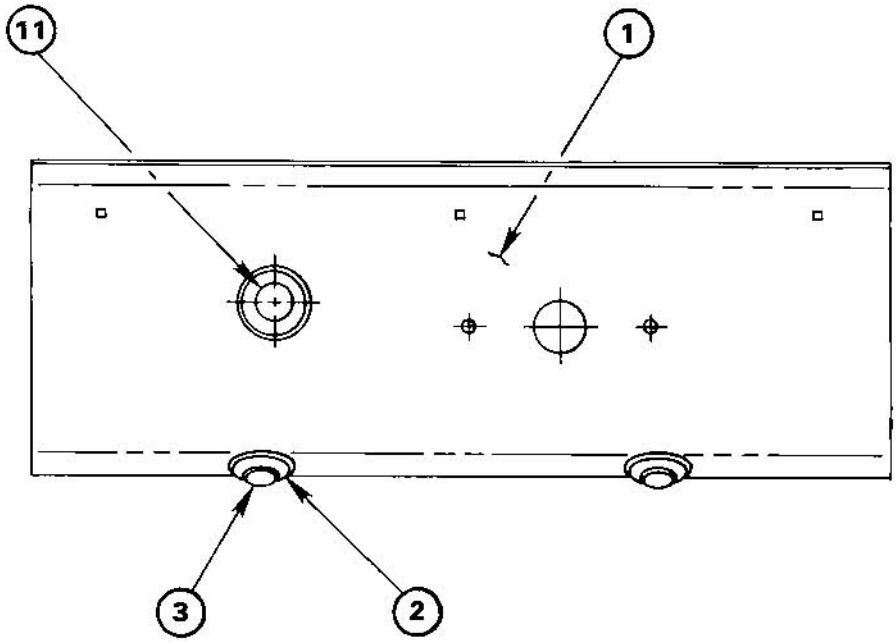

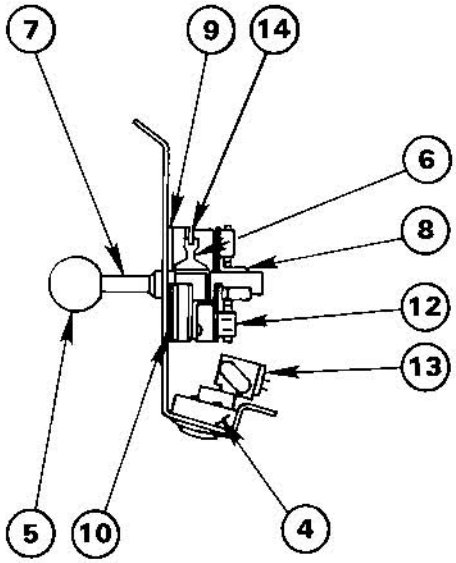

POWER SUPPLY ASSEMBLY

ITEM NO.	DESCRIPTION	GREMLIN NO.	REF DES
1	CAP E 4700 uf 25V	150-0019	C 5, C 6
2	CAP CER .05 uf 50V	151-0001	C 11
3	CAP CER 100 pf 50 V	151-0002	C 17, C 19
4	CAP CER .001 uf 50 V	151-0008	C 10
5	CAP CER .01 uf 50 V	151-0011	C 12, C 14, C 16
6	CAP CER .1 uf 50 V	151-0012	C 3
7	CAP 10 uf 25 V	150-0088	C 1, C 2, C 7, C 13, C 15, C 20
8	PCB POWER SUPPLY	170-0082	
9	CONN CRIMP	211-0056	
10	CONN M 4 PIN	212-0004	
11	CONN M 10 PIN	212-0021	
12	CONN 3 CIR XSTR	212-0085	
13	1 C LM 723	313-0001	U 3
14	1 C LM 741 EN	313-0004	U 1, U 2, U 4
15	RES 100 OHM ½ W 5%	471-0101	R 15
16	RES 1 K OHM ½ W 5%	471-0102	R 5, 13, 17, 20, 22-24, 35, 36, 38, 39
17	RES 10 K OHM ½ W 5%	471-0103	R 1, R 4, R 21, R 37
18	RES 100 K OHM ½ W 5%	471-0104	R 33
19	RES 1.2 K OHM ½ W 5%	471-0122	R 18
20	RES 13 K OHM ½ W 5%	471-0133	R 41
21	RES 1.5 K OHM ½ W 5%	471-0152	R 16
22	RES 2.7 K OHM ½ W 5%	471-0272	R 7, R 25, R 26, R 43, R 46
23	RES 3.3 K OHM ½ W 5%	471-0332	R 32
24	RES 470 OHM ½ W 5%	471-0471	R 34, R 40
25	RES 47 K OHM ½ W 5%	471-0473	R 44
26	RES 5.6 K OHM ½ W 5%	471-0562	R 12
27	RES 0.5 OHM 1 W 5%	472-00R5	R 4, R 29-R 31
28	RES 0.1 OHM 5 W 5%	473-00R1	R 28
29	POT 1 K CAR PCMTV	475-0004	R 9
30	POT 2 K CAR PCMTV	475-0005	R 8, R 42
31	DIODE MR 501	481-0004	D 1-D 4
32	DIODE IN 914	481-0006	D 7, D 8
33	DIODE ZENER IN 5231	481-0008	D 10
34	XSTR 2 N 4403	482-0006	Q 1, Q 3, Q 4
35	XSTR TIP 110	482-0013	Q 6
36	XSTR 2 N 4401	482-0014	Q 2, Q 5
37	XSTR TIP 115	482-0015	Q 7
38	XSTR TIP 29	482-0016	Q 8, Q 9
39	SCHEMATIC	800-0072	

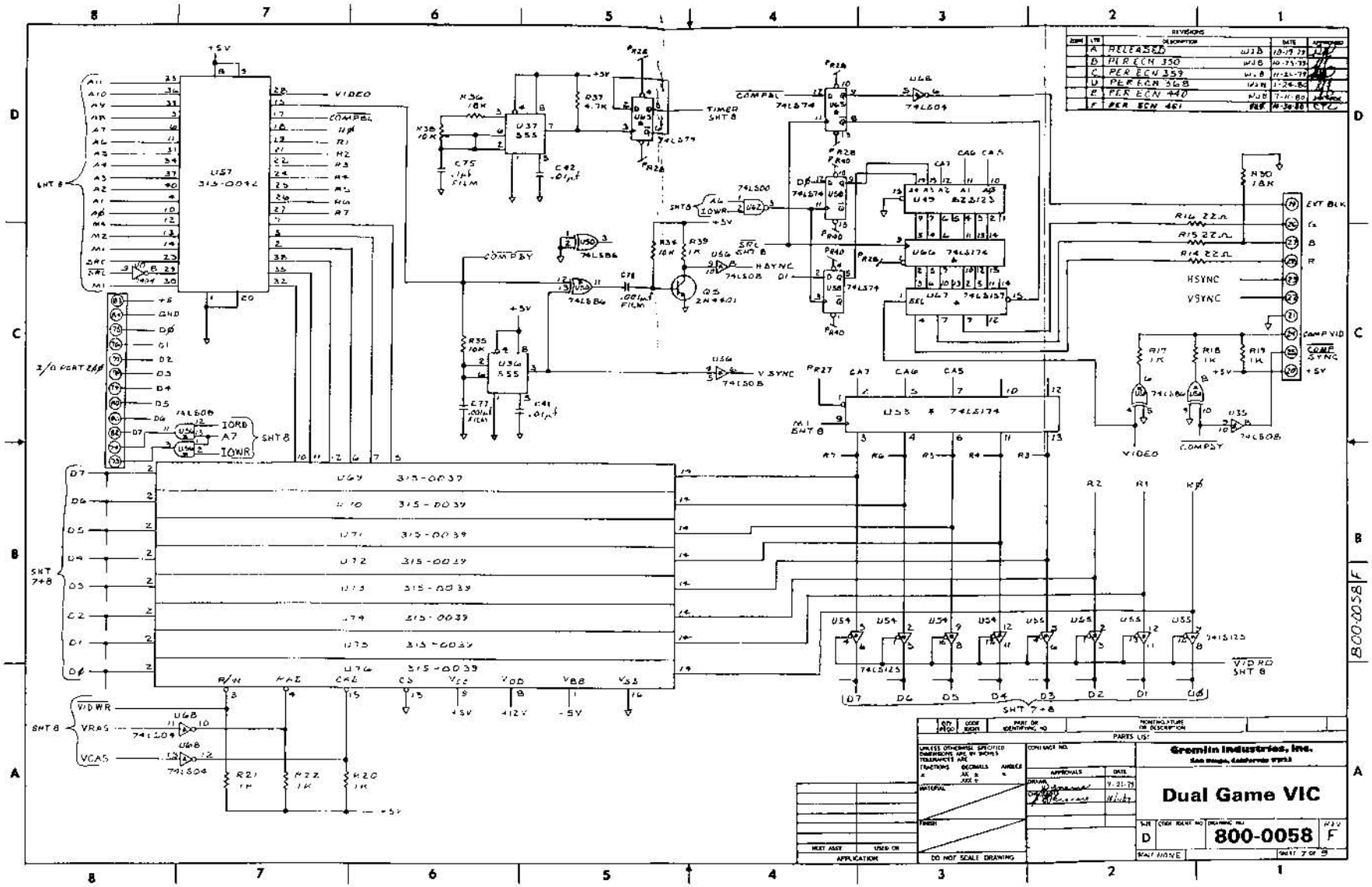

REVISIONS
A RELEASED
B PER ECN 350
C PER ECN 359
D PER ECN 368
E PER ECN 440
F PER ECN 461
U57 315-0042
U37 555
U36 555
U49 82S123
U66 74LS174
U53 74LS174
U69 315-0039
U70 315-0039
U71 315-0039
U72 315-0039
U73 315-0039
U74 315-0039
U75 315-0039
U76 315-0039
VIDEO
COMPBL
TIMER SHT 8
COMPBY
HSYNC
VSYNC
EXT BLK
COMP VID
COMP SYNC
I/O PORT 2Ø
SHT 8
SHT 7+8
VIDWR
VRAS
VCAS
VIDRD SHT 8
Gremlin Industries, Inc.
Dual Game VIC
800-0058
D
F
SHEET 7 OF 9
DO NOT SCALE DRAWING

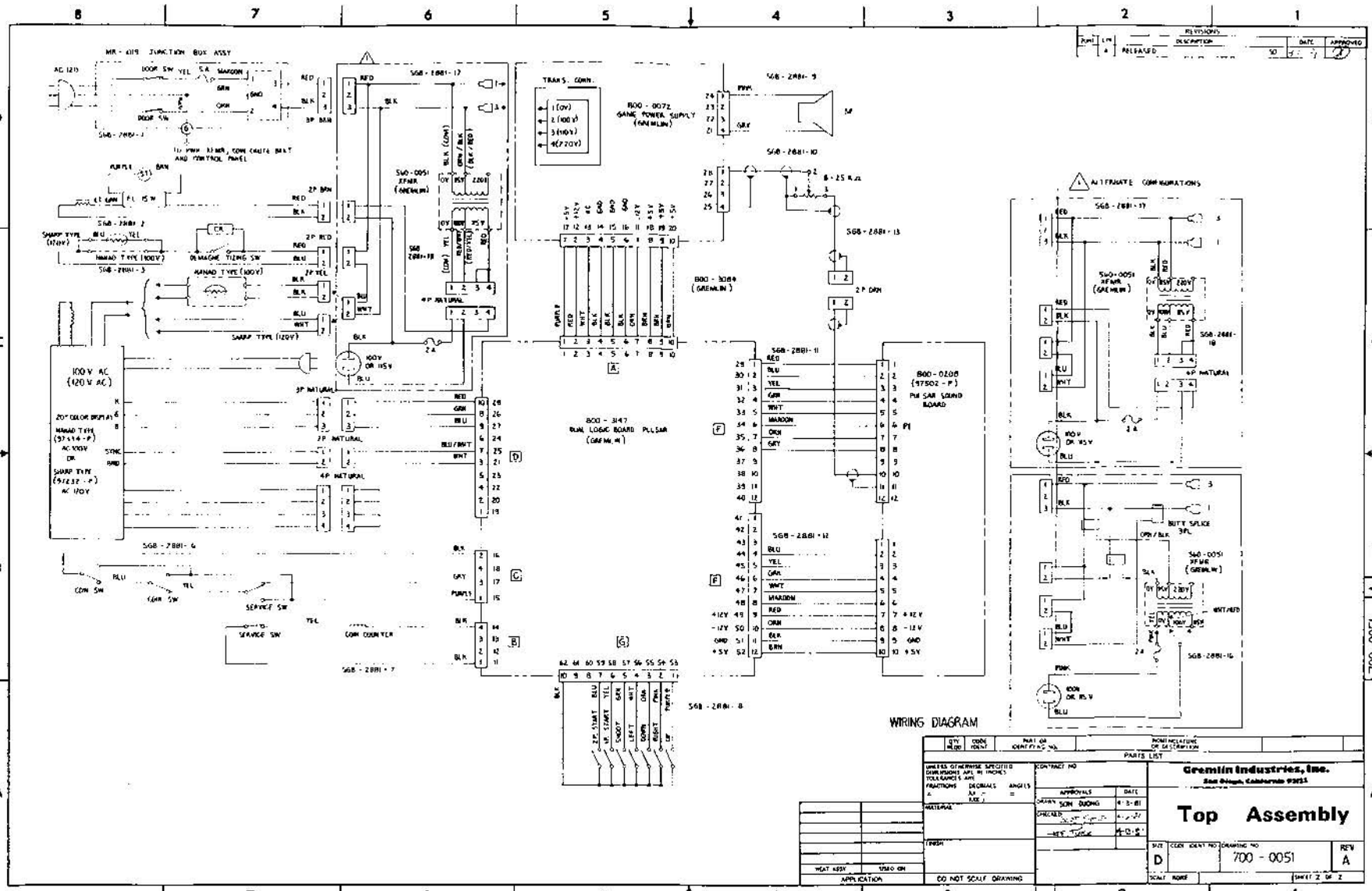

MR - 019 JUNCTION BOX ASSY
AC 120
DOOR SW
YEL
MAROON
GRN
GND
RED
BLK
3P BRN
DOOR SW
TO PWR XFMR, COIN CHUTE BRKT AND CONTROL PANEL
SGB - 2881 - 2
SHARP TYPE (120V)
BLU
YEL
MANAD TYPE (100V)
SGB - 2881 - 3
DEMAGNE TIZING SW
MANAD TYPE (100V)
SHARP TYPE (120V)
100 V AC (120 V AC)
20" COLOR DISPLAY
MANAD TYPE (97514 - P) AC 100V OR
SHARP TYPE (97232 - P) AC 120V
SYNC
GND
SGB - 2881 - 6
COIN SW
COIN SW
SERVICE SW
SERVICE SW
COIN COUNTER
SGB - 2881 - 7
SGB - 2881 - 17
RED
BLK
3P BRN
2P BRN
2P RED
2P YEL
BLU
WHT
4P NATURAL
100V OR 115V
3P NATURAL
2P NATURAL
4P NATURAL
SGB - 2881 - 18
BLK (COM)
ORN / BLK
(BLK / RED)
(COM)
YEL
RED/WHT
(RED/YEL)
RED
BLU
TRANS. CONN.
1 (0V)
2 (100V)
3 (110V)
4 (220V)
800 - 0072 GAME POWER SUPPLY (GREMLIN)
800 - 3084 (GREMLIN)
800 - 3147 DUAL LOGIC BOARD PULSAR (GREMLIN)
PURPLE
RED
WHT
BLK
ORN
BRN
SGB - 2881 - 9
PINK
GRY
SGB - 2881 - 10
8 - 25 KΩ
SGB - 2881 - 13
2P ORN
SGB - 2881 - 11
800 - 0208 (97502 - P) PULSAR SOUND BOARD
SGB - 2881 - 12
+12V
-12V
GND
+5V
SGB - 2881 - 8
2P START
1P START
SHOOT
LEFT
CONN
RIGHT
PINK
ALTERNATE CONFIGURATIONS
SGB - 2881 - 17
SGB - 2881 - 18
4P NATURAL
100V OR 115V
BUTT SPLICE 3PL
SGB - 2881 - 16
100V OR 115V
WHT/RED
WIRING DIAGRAM
REVISIONS
RELEASED
DESCRIPTION
DATE
APPROVED
PARTS LIST
UNLESS OTHERWISE SPECIFIED DIMENSIONS ARE IN INCHES
TOLERANCES ARE
FRACTIONS
DECIMALS
ANGLES
MATERIAL
FINISH
CONTRACT NO
APPROVALS
DATE
DRAWN SON DUONG
CHECKED
Gremlin Industries, Inc.
San Diego, California 92121
Top Assembly
SIZE D
CODE IDENT NO
DRAWING NO 700 - 0051
REV A
SCALE NONE
SHEET 2 OF 2
DO NOT SCALE DRAWING
APPLICATION
700 - 0051

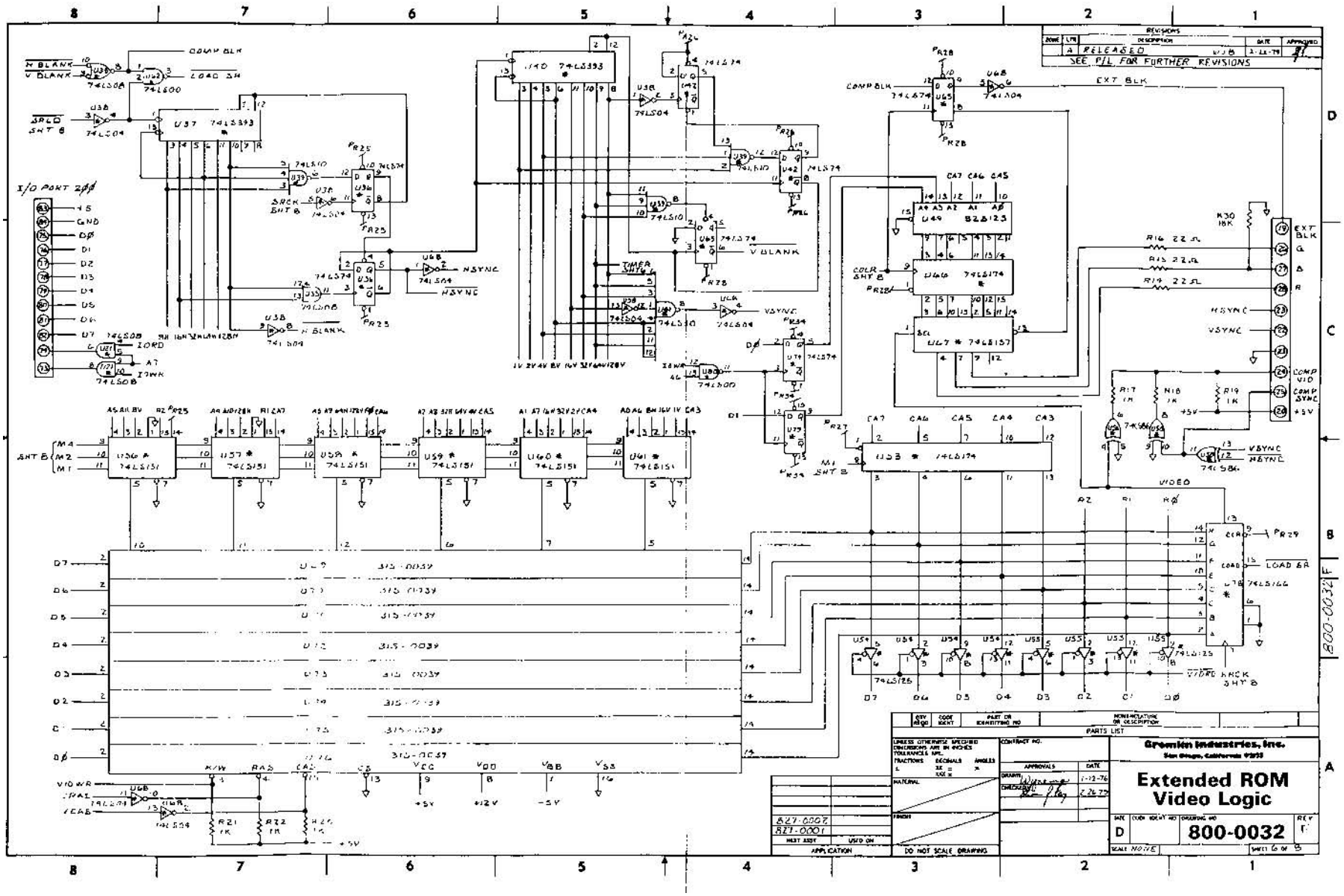

REVISIONS
A RELEASED
SEE P/L FOR FURTHER REVISIONS
I/O PORT 200
PARTS LIST
Gremlin Industries, Inc.
Extended ROM
Video Logic
800-0032
DO NOT SCALE DRAWING

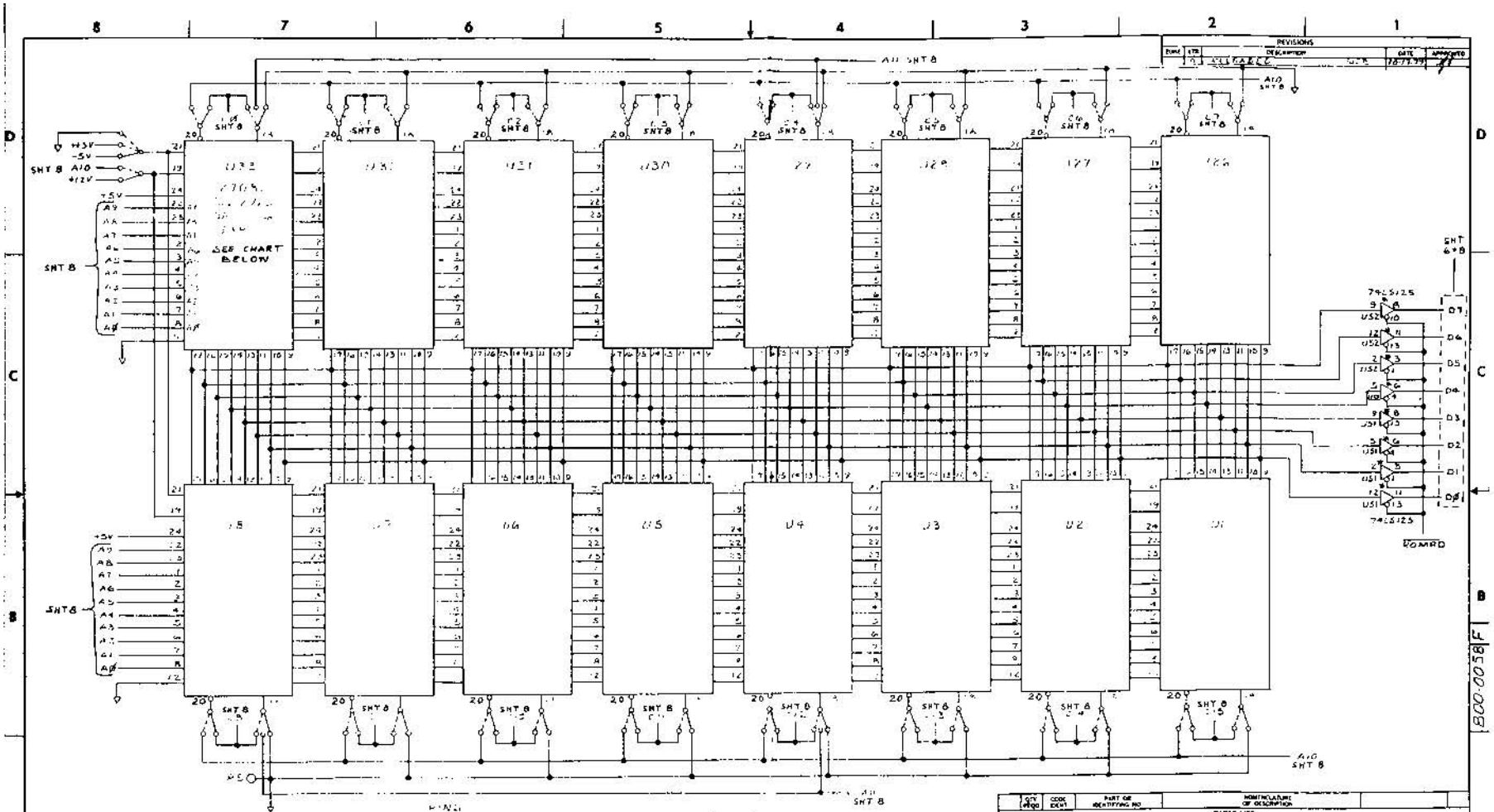

	PIN 13	PIN 14	PIN 15	PIN 16	SOCKETS USED	JUMPERS (SHT 8)
[illegible]	[illegible]	[illegible]	[illegible]	-5V	ALL	E1-E2, E5-E6, [illegible] E1-E12
16K OR LESS [illegible]	[illegible]	[illegible]	[illegible]	-5V	U33, U31, U29, [illegible] U8, U6, U4, U2	E1-E3, E5-E6, [illegible] E1-E2
[illegible]		A10	[illegible]	-5V	U33, U31, U29, U27, U8, U6, U4, U2	E1-E3, E5-E6, [illegible] E1-E2
2732	CN	A10	CN	All	U33, U27, U8, U4	E1-E3, E5-E6, E8-E9, E11-E12
32 K RDM	All	A10	CN	GND	U33, U27, U8, U4	E1-E3, E5-E6, E8-E9, E11-E12
17 K OR MORE	CN	+12V	A14	-5V	U33, ETC	

* I.C.'S ON ASSEMBLY [illegible]
I.C.'S ON ASSEMBLY [illegible]

NOTES: UNLESS OTHERWISE SPECIFIED

REVISIONS

ZONE	LTR	DESCRIPTION	DATE	APPROVED
		ALL CHANGES	10-17-79	

PARTS LIST

QTY REQD	CODE IDENT	PART OR IDENTIFYING NO	NOMENCLATURE OR DESCRIPTION

UNLESS OTHERWISE SPECIFIED DIMENSIONS ARE IN INCHES TOLERANCES ARE: FRACTIONS ± DECIMALS ± ANGLES ±

MATERIAL

FINISH

DO NOT SCALE DRAWING

CONTRACT NO.

APPROVALS | DATE

DRAWN 9-20-79

CHECKED 9/21/79

NEXT ASSY | USED ON

APPLICATION

Gremlin Industries, Inc.
San Diego, California 92121

Dual Game VIC

SIZE D | CODE IDENT NO | DRAWING NO 800-0058 | REV F

SCALE NONE | SHEET 8 OF 9

800-0058 F

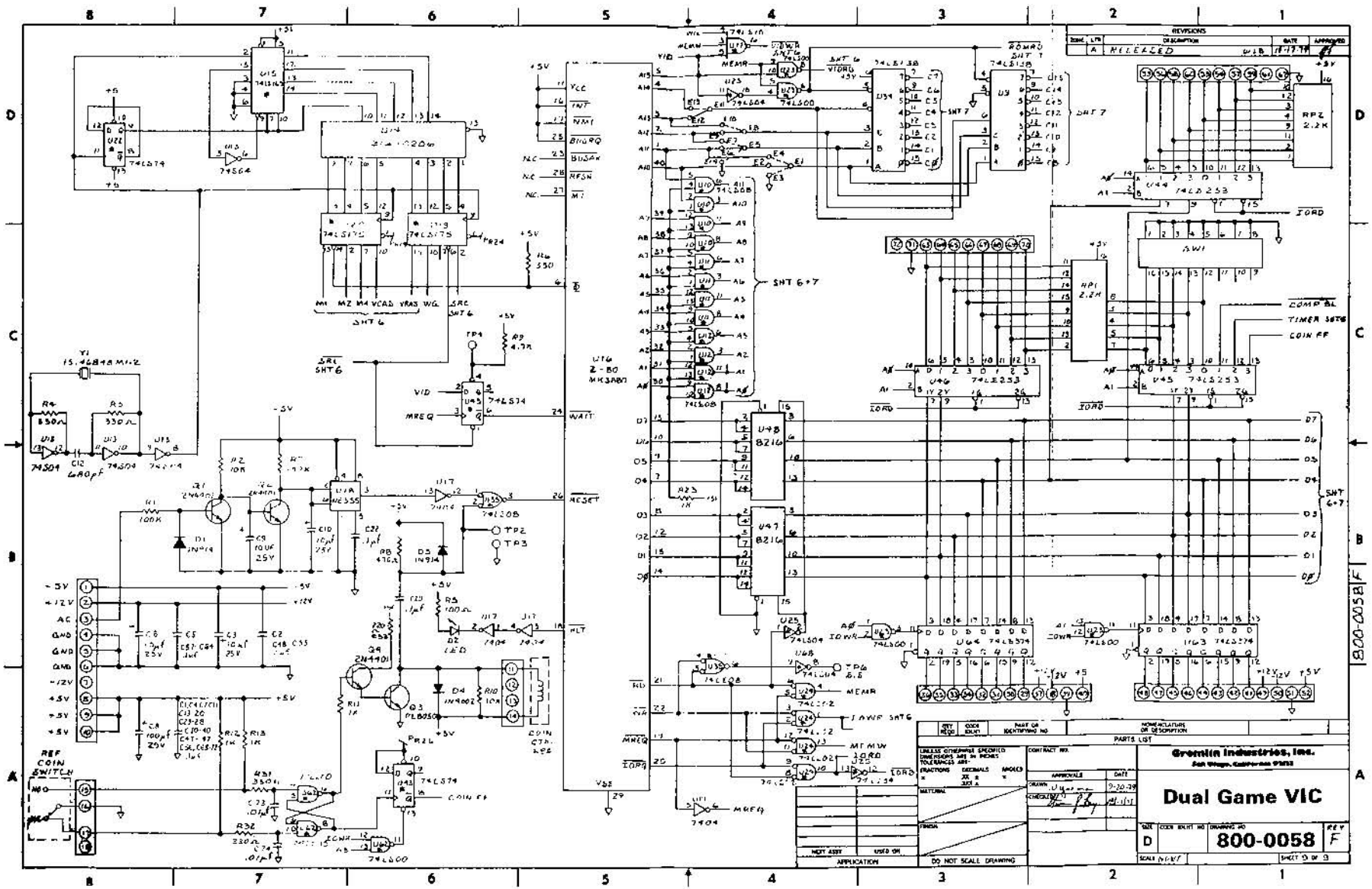
REVISIONS
A RELEASED
Gremlin Industries, Inc.
Dual Game VIC
800-0058
F
PARTS LIST
DO NOT SCALE DRAWING

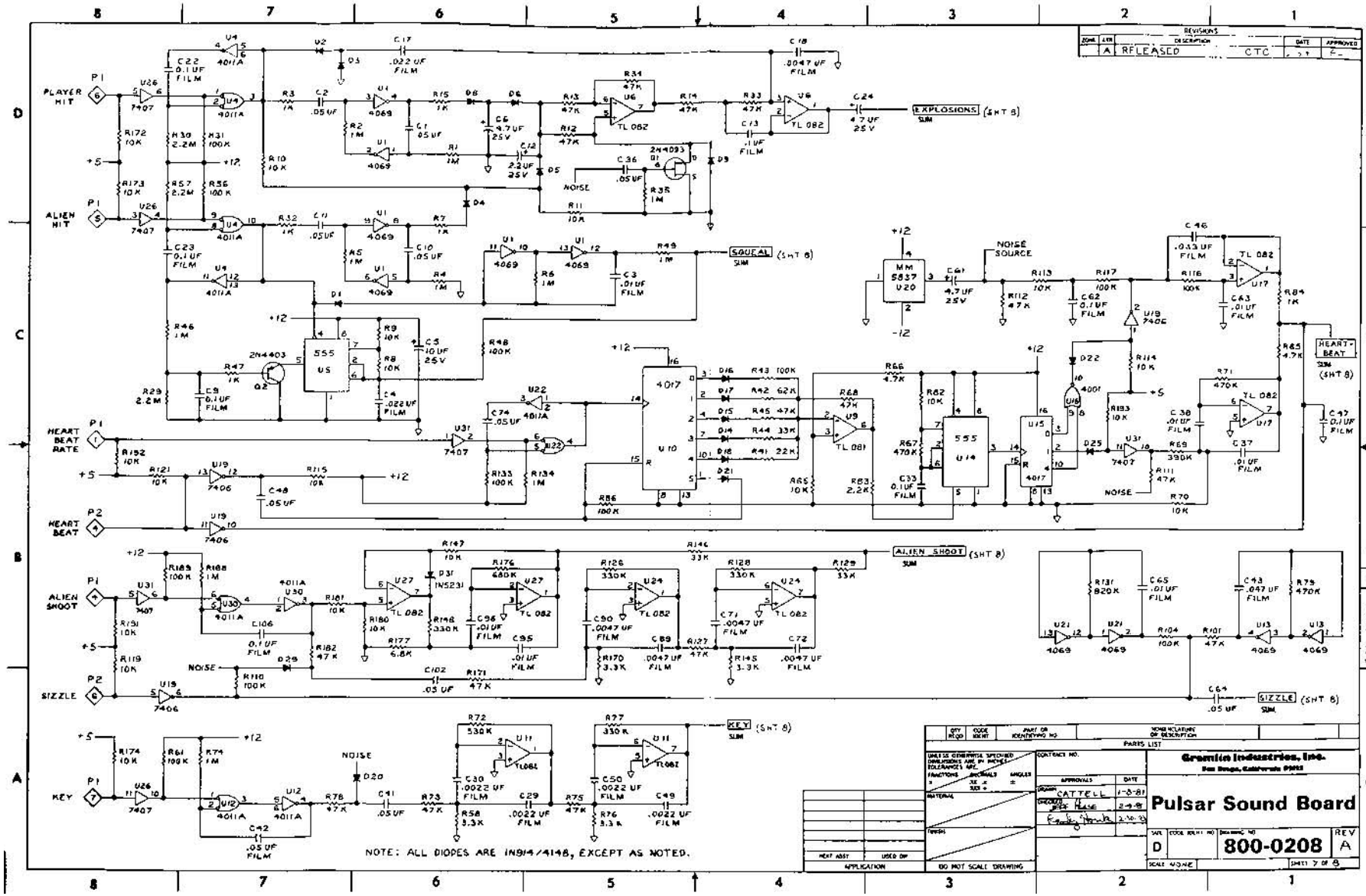
REVISIONS
A RELEASED CTC
PLAYER HIT
ALIEN HIT
HEART BEAT RATE
HEART BEAT
ALIEN SHOOT
SIZZLE
KEY
NOISE
EXPLOSIONS (SHT 8)
SQUEAL (SHT 8)
HEART BEAT (SHT 8)
ALIEN SHOOT (SHT 8)
SIZZLE (SHT 8)
KEY (SHT 8)
NOISE SOURCE
MM 5837 U20
555 U5
555 U14
4017 U10
TL 082
TL 081
4011A
4069
7407
7406
2N4403
2N4093
NOTE: ALL DIODES ARE IN914/4148, EXCEPT AS NOTED.
PARTS LIST
Gremlin Industries, Inc.
San Diego, California 92121
Pulsar Sound Board
800-0208
REV A
SCALE NONE
SHEET 7 OF 8
DO NOT SCALE DRAWING

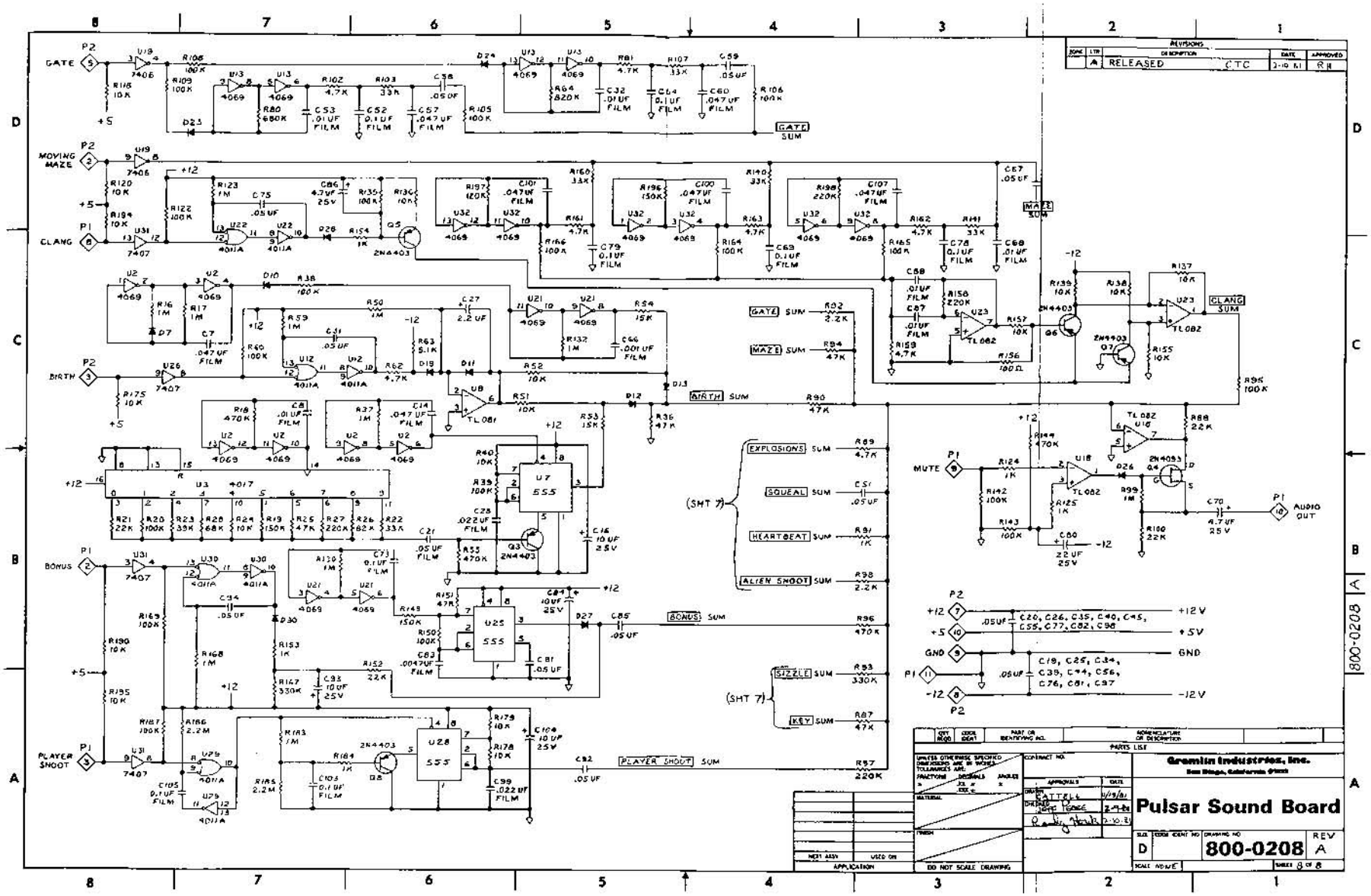
GATE
MOVING MAZE
CLANG
BIRTH
BONUS
PLAYER SHOOT
MUTE
GATE SUM
MAZE SUM
CLANG SUM
BIRTH SUM
EXPLOSIONS SUM
SQUEAL SUM
HEARTBEAT SUM
ALIEN SHOOT SUM
BONUS SUM
SIZZLE SUM
KEY SUM
PLAYER SHOOT SUM
AUDIO OUT
+12V
+5V
GND
-12V
REVISIONS
RELEASED
Gremlin Industries, Inc.
Pulsar Sound Board
800-0208
REV A
SHEET 8 OF 8
DO NOT SCALE DRAWING

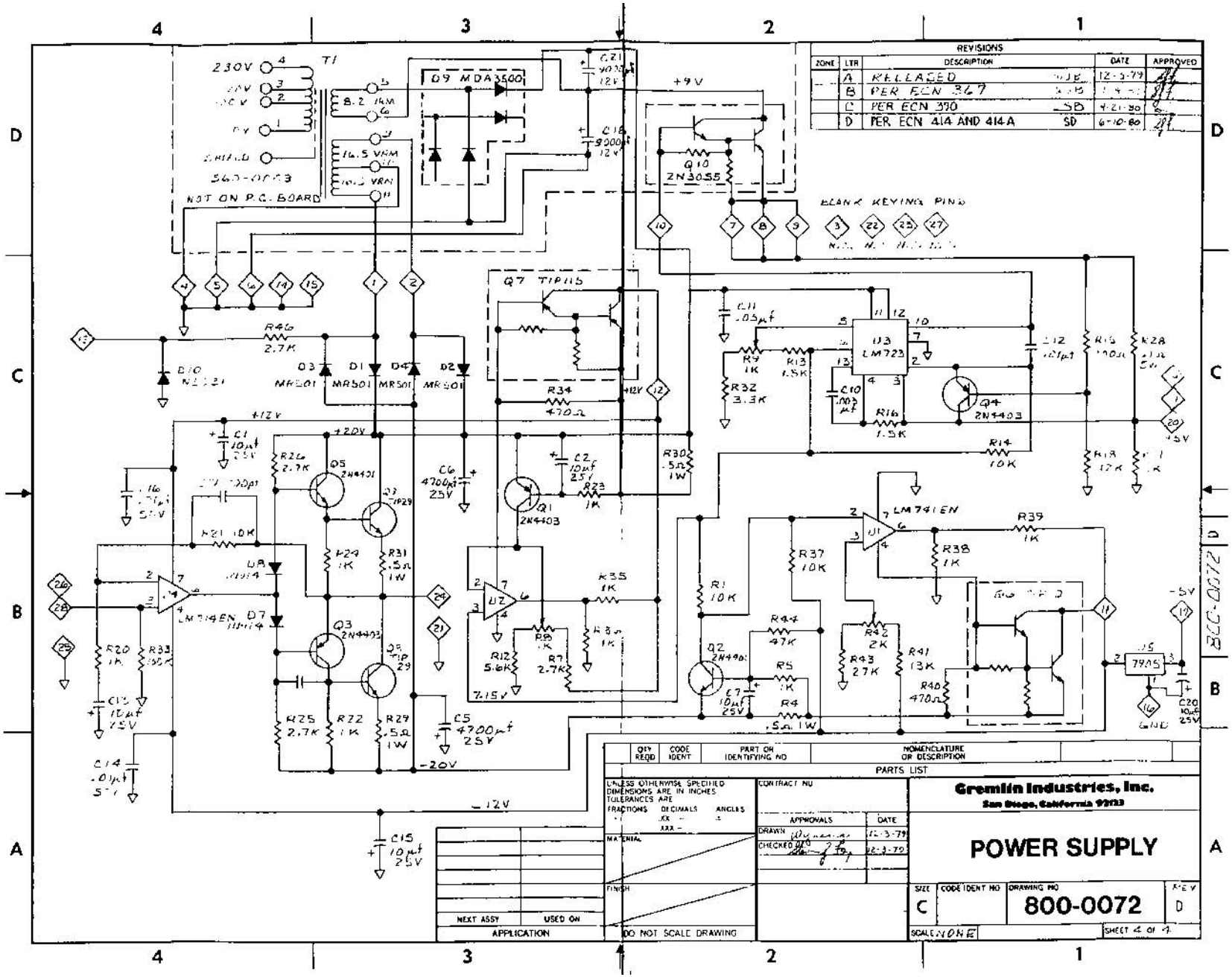

REVISIONS
ZONE | LTR | DESCRIPTION | DATE | APPROVED
A | RELEASED | 12-3-79
B | PER ECN 367
C | PER ECN 390 | SB | 4-21-80
D | PER ECN 414 AND 414A | SD | 6-10-80
T1
230V
NOT ON P.C. BOARD
D9 MDA3500
+9V
Q10 2N3055
BLANK KEYING PINS
Q7 TIP115
U3 LM723
Q4 2N4403
LM741EN
LM714EN
Q5 2N4401
Q3 2N4403
Q1 2N4403
Q2 2N4401
U5 7905
GND
-5V
+12V
+20V
-20V
-12V
7.15V
C5 4700µf 25V
C6 4700µf 25V
C20 10µf 25V
C15 10µf 25V
C14 .01µf 50V
C1 10µf 25V
C2 10µf 25V
C11 .05µf
C12 .01µf
C10 .003µf
C7 10µf 25V
R46 2.7K
R34 470Ω
R30 .5Ω 1W
R35 1K
R39 1K
R38 1K
R37 10K
R1 10K
R44 47K
R5 1K
R4 .5Ω 1W
R42 2K
R43 27K
R41 13K
R40 470Ω
R12 5.6K
R7 2.7K
R8 1K
R23 1K
R26 2.7K
R24 1K
R31 .5Ω 1W
R25 2.7K
R22 1K
R29 .5Ω 1W
R20 1K
R33 100K
R21 10K
R9 1K
R13 1.5K
R32 3.3K
R16 1.5K
R14 10K
R15 100Ω
R28 .1Ω 5W
R18 12K
R17 1K
D10 NE231
D3 MR501
D1 MR501
D4 MR501
D2 MR501
D7 1N914
D8 1N914
QTY REQD | CODE IDENT | PART OR IDENTIFYING NO | NOMENCLATURE OR DESCRIPTION
PARTS LIST
UNLESS OTHERWISE SPECIFIED DIMENSIONS ARE IN INCHES TOLERANCES ARE
FRACTIONS DECIMALS ANGLES
MATERIAL
FINISH
DO NOT SCALE DRAWING
CONTRACT NO
APPROVALS | DATE
DRAWN | 12-3-79
CHECKED | 12-3-79
NEXT ASSY | USED ON
APPLICATION
Gremlin Industries, Inc.
San Diego, California 92123
POWER SUPPLY
SIZE C | CODE IDENT NO | DRAWING NO 800-0072 | REV D
SCALE NONE | SHEET 4 OF 4
800-0072